TECHNICAL MANUAL

OPERATOR'S AND UNIT MAINTENANCE
MANUAL INCLUDING REPAIR PARTS AND
SPECIAL TOOLS LIST

FOR

SHOP EQUIPMENT CONTACT MAINTENANCE (SECM)

P/N 50154-001

NSN 4940-01-442-2734

MOUNTED ON

HIGH MOBILITY MULTI PURPOSE WHEELED VEHICLE (HMMWV) HEAVY (HVY) MODEL # M1097A2

DISTRIBUTION STATEMENT A: Approved for public release;
distribution is unlimited

HEADQUARTERS, DEPARTMENT OF THE ARMY
2 September 2003

WARNING SUMMARY

Personnel performing operations, procedures and practices, which are included or implied in this Technical Manual shall observe the following warnings. Failure to observe these warnings and precautionary information can cause serious injury, death, or destruction of material.

WARNING

Six people are required to lift and move the Main Box Assembly. Empty Main Box of all contents.

WARNING

Four people are required to lift and move the Overhead Rack Assembly.

WARNING

Chemical agent resistant coating (CARC) is extremely toxic and flammable. Never use where sparks, smoking or open flame may be present. CARC, if improperly used, may cause long term health problems. Avoid contact with skin, breathing of fumes, or ingestion of dried particles. Use must be monitored by local safety office and preventive medicine support activity. Refer to TM 43-0139 for applicable safety precautions prior to removal or application of CARC.

URGENT

TM 1-4940-355-12&P

CHANGE

NO. 1

HEADQUARTERS
DEPARTMENT OF THE ARMY
WASHINGTON, D.C., 15 MARCH 2005

TECHNICAL MANUAL

OPERATOR'S AND UNIT MAINTENANCE
MANUAL INCLUDING REPAIR PARTS AND SPECIAL
TOOLS LIST
FOR
SHOP EQUIPMENT CONTACT MAINTENANCE (SECM)
P/N 50154-001
NSN 4940-01-442-2734

MOUNTED ON
HIGH MOBILITY MULTI PURPOSE WHEELED VEHICLE
(HMMWV) HEAVY (HVY) MODEL # M1097A2

DISTRIBUTION STATEMENT A – Approved for public release; distribution is unlimited.

TM 1-4940-355-12&P, 2 September 2003, is updated as follows:

1. File this sheet in front of the manual for reference.
2. This change is a result of MWO 1-4940-355-50-1.
3. New or updated text is indicated by a vertical bar in the margin of the page.
4. Changes to the RPSTL are indicated by an asterisk * placed to the left of the item number column.
5. Added or changed illustrations are indicated by a vertical bar adjacent to the figure number.
6. Remove old pages and insert new pages as indicated below.

Remove Pages	Insert Pages
A/B blank	A/B blank
i – v/(vi blank)	i – iv

7. Replace the following work packages with their revised version.

Work Package Number
WP 0002 00
WP 0012 00
WP 0017 00
WP 0020 00
WP 0027 00 through 0031 00

TM 1-4940-355-12&P

CHANGE

NO. 1

By Order of the Secretary of the Army:

PETER J. SCHOOMAKER
General, United States Army
Chief of Staff

Official:

SANDRA R. RILEY
Administrative Assistant to the
Secretary of the Army
0506302

Distribution:

To be distributed in accordance with the initial distribution number (IDN) 314104, requirements for TM 1-4940-355-12&P.

LIST OF EFFECTIVE PAGES/WORK PACKAGES

Dates of issue for original and changed pages are:

Original 2 Sep 2003
Change 1 15 Mar 2005

TOTAL NUMBER OF PAGES FOR FRONT AND REAR MATTER IS 19 AND TOTAL NUMBER OF WORK PACKAGES IS 31 CONSISTING OF THE FOLLOWING

PAGE/WP NO.	CHANGE NO.*
Title	0
a/b blank	0
A/B blank	1
i-iv	1
WP 0001 00 (1 page)	0
Chap 1 title page	0
WP 0002 00 (3 pages)	1
WP 0003 00 (1 page)	0
Chap 2 title page	0
WP 0004 00 (1 page)	0
WP 0005 00 (1 page)	0
WP 0006 00 (1 page)	0
Chap 3 title page	0
WP 0007 00 (1 page)	0
WP 0008 00 (1 page)	0
Chap 4 title page	0
WP 0009 00 (2 pages)	0
WP 0010 00 (1 page)	0
WP 0011 00 (1 page)	0
WP 0012 00 (6 pages)	1
WP 0013 00 (3 pages)	0
WP 0014 00 (2 pages)	0
WP 0015 00 (3 pages)	0
WP 0016 00 (3 pages)	0
WP 0017 00 (7 pages)	1
WP 0018 00 (4 pages)	0
WP 0019 00 (3 pages)	0
WP 0020 00 (9 pages)	1
WP 0021 00 (1 page)	0
WP 0022 00 (2 pages)	0
Chap 5 title page	0
WP 0023 00 (1 page)	0
WP 0024 00 (5 pages)	0
WP 0025 00 (2 pages)	0
WP 0026 00 (6 pages)	0
WP 0027 00 (31 pages)	1
WP 0028 00 (1 page)	1
WP 0029 00 (2 pages)	1
WP 0030 00 (4 pages)	1
WP 0031-00 (2 pages)	1

*Zero in this column indicates an original page.

HEADQUARTERS
DEPARTMENT OF THE ARMY
WASHINGTON, D.C., 2 SEPTEMBER 2003

OPERATOR'S AND UNIT MAINTENANCE MANUAL INCLUDING REPAIR PARTS AND SPECIAL TOOLS LIST

FOR

SHOP EQUIPMENT CONTACT MAINTENANCE (SECM)
P/N 50154-001
NSN 4940-01-442-2734

MOUNTED ON
HIGH MOBILITY MULTI PURPOSE WHEELED VEHICLE (HMMWV)
HEAVY (HVY) MODEL # M1097A2

REPORTING ERRORS AND RECOMMENDING IMPROVEMENTS

You can improve this manual. If you find any mistakes or if you know of a way to improve these procedures, please let us know. Mail your letter or DA Form 2028 (Recommended Changes to Publications and Blank Forms) located in the back of this manual, directly to: Commander, U.S. Army Aviation and Missile Command, ATTN: AMSAM-MMC-MA-NP, Redstone Arsenal, AL 35898-5000. A reply will be furnished to you. You may also provide DA Form 2028 information to AMCOM via e-mail, fax, or the World Wide Web. Our fax number is: DSN 788-6546 or Commercial 256-842-6546. Our e-mail address is: 2028@redstone.army.mil. Instructions for sending an electronic 2028 may be found at the back of this manual immediately preceding the hard copy 2028. For the World Wide Web use: https://amcom2028.redstone.army.mil.

DISTRIBUTION STATEMENT A – Approved for public release; distribution is unlimited.

TABLE OF CONTENTS

WP Sequence No.

WARNING SUMMARY

HOW TO USE THIS MANUAL

General Information 0001 00

CHAPTER 1 – DESCRIPTION AND THEORY OF OPERATION

Equipment Description and Data 0002 00
Theory of Operation 0003 00

CHAPTER 2 – OPERATOR INSTRUCTIONS

Operator Controls and Indicators 0004 00
Operation Under Usual Conditions 0005 00
Operation Under Unusual Conditions 0006 00

CHAPTER 3 –TROUBLESHOOTING PROCEDURES
Troubleshooting Index....0007 00
Troubleshooting Procedures....0008 00
CHAPTER 4 – MAINTENANCE INSTRUCTIONS
Service Upon Receipt 0009 00
PMCS Introduction....0010 00
PMCS....0011 00
Removal Of Major Components....0012 00
Main Box Component....0013 00
Front Door Component 0014 00
Slider Door Component....0015 00
Back Door Component....0016 00
Overhead Cargo/Maintenance Rack Assembly Component 0017 00
Side Box Left Hand Component 0018 00
Side Box Right Hand Component....0019 00
Assembly of Major Components 0020 00
Preparation for Storage and Shipment 0021 00
Replacing Rear Mounting Bar....0022 00
CHAPTER 5 – SUPPORTING INFORMATION
References....0023 00
Maintenance Allocation Chart (MAC) Introduction....0024 00
Maintenance Allocation Chart (MAC)....0025 00
Repair Parts and Special Tools List Introduction....0026 00
Repair Parts and Special Tools List....0027 00
GROUP 01 SECM Assembly 0027 00
GROUP 0110 Overhead Cargo/Maintenance Rack Assembly....0027 00
GROUP 011001 Front/Rear Handrail Assembly....0027 00
GROUP 011002 Side Handrail Assembly....0027 00
GROUP 011003 Ladder Assembly 0027 00
GROUP 011004 Safety Rail Mount Assembly....0027 00
GROUP 0120 Side Box Right Hand Assembly....0027 00
GROUP 0130 Main Box Assembly (sheet 1 of 2) 0027 00
Main Box Assembly (sheet 2 of 2) 0027 00
GROUP 013001 Door, Front, RH, LH Assembly 0027 00
GROUP 013002 Door, Back, RH Assembly 0027 00
GROUP 013003 Door, Back, LH Assembly....0027 00
GROUP 013004 Door, Slider Assembly 0027 00
GROUP 0140 Side Box Left Hand Assembly 0027 00
National Stock Number Index 0028 00
Part Number Index....0029 00
Components of End Item (COEI) and Basic Issue Items (BII) Lists 0030 00
Expendable and Durable Items List....0031 00

LIST OF ILLUSTRATIONS

WP	FIGURE	TITLE	PAGE NO.
0002 00	1	Container Components	0002 00-2
0009 00	1	Windshield Bolt (Typical 3 Places)	0009 00-1
0009 00	2	Cargo Bed Area	0009 00-2
0012 00	1	Removing Handrail Assemblies and Ladder	0012 00-2
0012 00	2	Storage Areas	0012 00-2
0012 00	3	Side Handrail Assembly Preparation for Storage	0012 00-3
0012 00	4	Handrail Safety Bars Stowed on Safety Rail Assembly Mount	0012 00-3

0012 00	5	Overhead Cargo Maintenance Rack Assembly Removal	0012 00-4
0012 00	6	Side Box Assembly Removal	0012 00-5
0012 00	7	Main Box Assembly Removal	0012 00-6
0013 00	1	Main Box Disassembly	0013 00-3
0014 00	1	Main Box Assembly Front Door	0014 00-1
0015 00	1	Main Box Assembly Slider Door	0015 00-1
0015 00	2	Slider Door Disassembly	0015 00-2
0016 00	1	Back Door Assembly	0016 00-2
0017 00	1	Removing Handrail Assemblies and Ladder	0017 00-2
0017 00	2	Locking Pin Assembly Replacement	0017 00-2
0017 00	3	Strapping Replacement	0017 00-3
0017 00	4	Rear Angle Bracket, Inner Bracket and Front Support Replacement	0017 00-4
0017 00	5	Handrail Extension Nylon Bushing Replacement	0017 00-6
0018 00	1	Left Side Box Assembly	0018 00-2
0019 00	1	Assembly Side Box Right Hand	0019 00-2
0020 00	1	Rear Cab Curtain Installation	0020 00-1
0020 00	2	Main Box Installed	0020 00-2
0020 00	3	Front Attachment (Typical Two Places)	0020 00-3
0020 00	4	Rear Attachment (Typical Three Places)	0020 00-3
0020 00	5	Side Box Positioning	0020 00-4
0020 00	6	Installation of Side Boxes	0020 00-5
0020 00	7	Overhead Cargo/Maintenance Rack Assembly Installation	0020 00-7
0020 00	8	Installation of Ladder and Handrail Assemblies	0020 00-9
0022 00	1	Rear Mounting Bar Replacement	0022 00-1
0027 00	1	SECM Assembly	0027 00-2
0027 00	2	Overhead Cargo/Maintenance Rack Assembly	0027 00-4
0027 00	2.1	Platform Assembly	0027 00-6
0027 00	2.2	Front/Rear Handrail Assembly	0027 00-8
0027 00	2.3	Side Handrail Assembly	0027 00-10
0027 00	2.4	Ladder Assembly	0027 00-12
0027 00	2.5	Safety Rail Mount Assembly	0027 00-14
0027 00	3	Side Box Right Hand Assembly	0027 00-16
0027 00	4	Main Box Assembly (sheet 1 of 2)	0027 00-19
0027 00	4	Main Box Assembly (sheet 2 of 2)	0027 00-20
0027 00	5	Front Door Assembly	0027 00-22
0027 00	6	Right Hand Back Door Assembly	0027 00-24
0027 00	7	Left Hand Back Door Assembly	0027 00-26
0027 00	8	Slider Door Assembly	0027 00-28
0027 00	9	Side Box Left Hand Assembly	0027 00-30
0030 00	1	Components of End Items	0030 00-3

LIST OF TABLES

WP	TABLE	TITLE	PAGE NO.
0008 00	1	SECM Troubleshooting	0008 00-1
0011 00	1	PMCS Schedule	0011 00-1
0025 00	1	MAC for SECM	0025 00-1
0025 00	2	Tools and Test Equipment for SECM	0025 00-2
0025 00	3	Remarks for SECM	0025 00-2
0030 00	1	Components of End Items (COEI) List	0030 00-2
0030 00	2	Basic Issue Items (BII) List	0030 00-2
0031 00	1	Expendable and Durable Items List	0031 00-2

HOW TO USE THIS MANUAL

This manual is divided into chapters, and work packages numbered in sequence. Figures and tables are also numbered in sequence.

FINDING INSTRUCTIONS YOU NEED

Chapter, Work Package, Work Package titles and page numbers are listed in the Table of Contents.

Figure numbers and titles are listed in List of Illustrations, table numbers and titles in List of Tables.

Subject Index is in the back of the manual. Index lists all subjects in the manual in alphabetical order with Work Package numbers.

WARNINGS, CAUTIONS, AND NOTES

WARNING

A warning denotes a condition or procedure which when not complied with can result in injury or death to personnel and damage to equipment.

CAUTION

A caution denotes a condition or procedure which when not complied with can result in damage to equipment.

NOTE

A note highlights a condition or statement, which aids the reader.

SHOP EQUIPMENT CONTACT MAINTENANCE (SECM) GENERAL INFORMATION

SCOPE

Type of manual: Operator and Unit Maintenance.
Equipment Name: Shop Equipment Contact Maintenance Container.
Purpose of Equipment: To provide a container on the High Mobility Multi Purpose Wheeled Vehicle (HMMWV) HEAVY VARIANT (HVY), Model #1097A2 for the transport of spare parts, tools, and equipment.

MAINTENANCE FORMS, RECORDS AND REPORTS

Department of the Army forms and records used for equipment maintenance will be those prescribed by DA PAM 738-751, Functional Users Manual for the Army Maintenance Management System-Aviation (TAMMS-A).

REPORTING EQUIPMENT IMPROVEMENT RECOMMENDATIONS (EIR)

If your Shop Equipment Contact Maintenance needs improvement, let us know. Send us an EIR. You, the user, are the only one who can tell us what you don't like about the equipment. Let us know why you don't like the design or performance. Put it in an SF 368 (Quality Deficiency Report). Mail it to the address specified in DA PAM 378-751, Functional Users Manual for the Army Maintenance Management System-Aviation (TAMMS-A), or as specified by the acquiring activity. We will send you a reply.

CORROSION PREVENTION AND CONTROL (CPC)

Corrosion Prevention and Control (CPC) of Army materiel is a continuing concern. It is important that any corrosion problems with this item be reported so that the problem can be corrected and improvements can be made to prevent the problem in future items.

While corrosion is typically associated with rusting of metals, it can also include deterioration of other materials, such as rubber and plastic. Unusual cracking, softening, swelling, or breaking of these materials may be a corrosion problem.

If a corrosion problem is identified, it can be reported using SF 368, Product Quality Deficiency Report. Use of key words such as "corrosion", "rust", "deterioration", or "cracking", will ensure that the information is identified as a CPC problem.

This form should be submitted to the address specified in DA PAM 738-751, Functional Users Manual for the Army Maintenance Management System (TAMMS).

DESTRUCTION OF ARMY MATERIEL TO PREVENT ENEMY USE

Instructions for destruction of this equipment are contained in TM-750-244-1-4, Procedures for Destruction of Aviation Ground Support Equipment (FSC 4940), to prevent enemy use.

PREPARATION FOR STORAGE OR SHIPMENT

For general technical information on preparation for storage and shipment refer to TM 1-1500-204-23 (Series) and TM 743-200-1. For regulatory requirements pertaining to equipment placed in administrative storage refer to AR 750-1.

CHAPTER 1

DESCRIPTION AND THEORY OF OPERATION FOR SHOP EQUIPMENT CONTACT MAINTENANCE (SECM)

SHOP EQUIPMENT CONTACT MAINTENANCE (SECM) EQUIPMENT DESCRIPTION AND DATA

CHARACTERISTICS

The Shop Equipment Contact Maintenance (SECM) is a bonded composite structure, which includes the main (center) container, two side boxes and an overhead cargo/maintenance rack. When the SECM container is assembled and installed on the HMMWV it provides for the transport of aircraft maintenance repair parts, tools, and equipment.

The SECM container, when mounted on the HMMWV can be transported by highway, rail, marine or air (C130, C141, C17 or C5 aircraft), or externally by helicopter as prescribed in FM-55-450 (Series).

The SECM, when mounted on the HMMWV, can be operated in any geographical area and under any climatic condition.

CAPABILITIES AND FEATURES

The side boxes are equipped with adjustable shelves which can be positioned up or down in one-inch increments. There is also one universal, 8 inch high, parts tray in each side box. The trays are provided for small parts/tool transport.

The main box is also equipped with two shelves, which can be adjusted at one-inch increments.

Cargo tie down straps, which connect to the shelf tracks in the side and center boxes, are provided for tie down of loose equipment/parts.

The overhead cargo/maintenance rack assembly is equipped with tie down rings around its perimeter. The rings will accept standard air cargo tie down strap, and/or other devices for the securing of cargo. The rack assembly will accommodate a maximum of 500 pounds. Removable handrail assemblies are included for personnel safety during maintenance operations. A stepladder is also available for access to the rack assembly. The rack assembly provides storage space for the handrail assemblies and ladder.

The main box is equipped with a top slider door, which will allow cargo to be loaded from hoists or similar top entry style loading systems.

All doors of the container are equipped with hasps and staples that will readily accept a standard padlock.

CAUTION

Do not operate vehicle with Overhead Cargo/Maintenance Rack Assembly handrail assemblies fully extended. Serious damage could occur.

Prior to travel, the handrail assemblies must be lowered to the intermediate position or removed and stowed. The ladder must be removed and stowed.

LOCATION AND DESCRIPTION OF MAJOR COMPONENTS

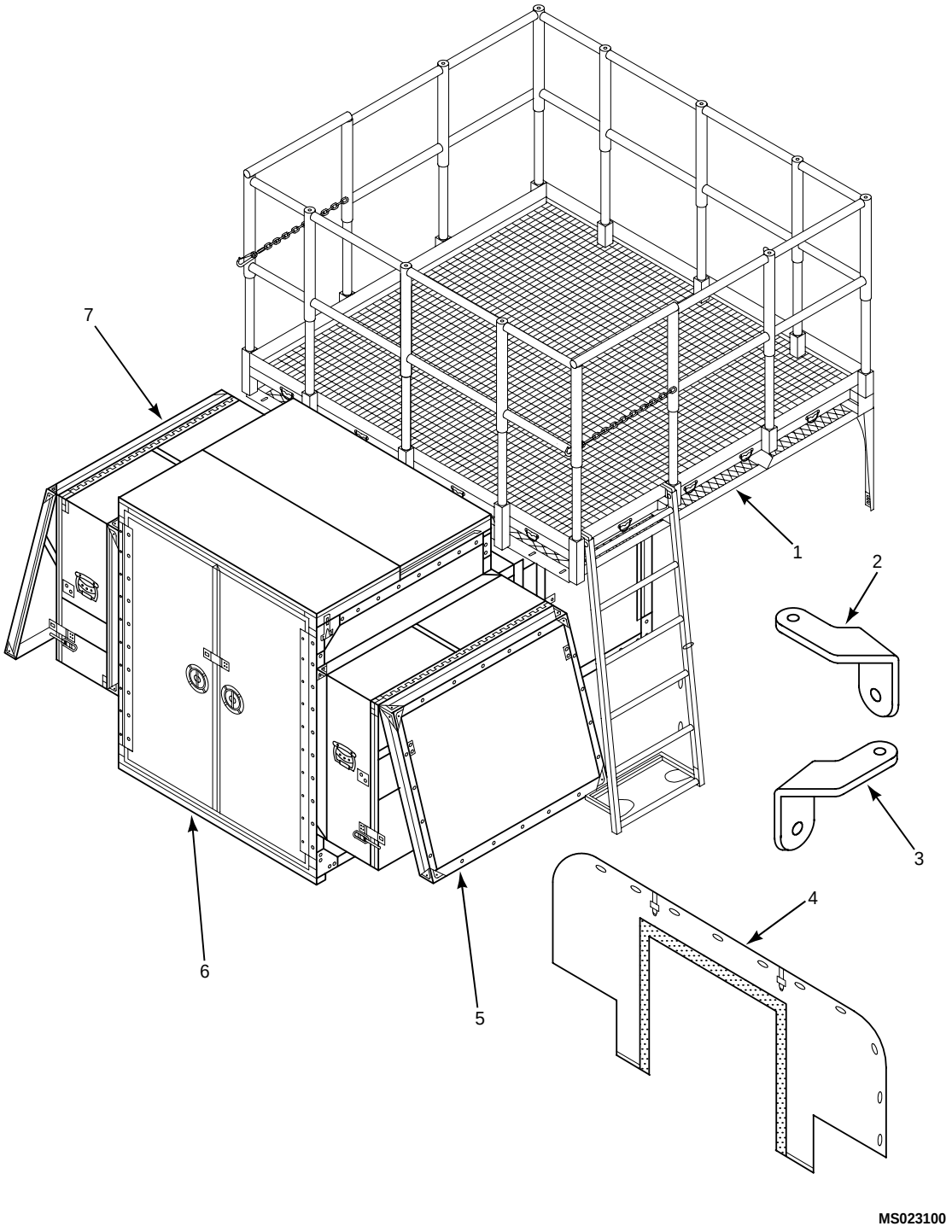

Figure 1. Container Components

EQUIPMENT DATA

The container components, as seen in work package 0027 00, Figure 1, weigh a total of 783 pounds. The components are as follows (Figure 1):

Rack assembly, overhead, cargo/maintenance (1)
Mirror bracket, curbside (2)
Mirror bracket, roadside (3)
Backwall canvas (4)
Box, side, right hand (5)
Box, main compartment (6)
Box, side, left hand (7)

EQUIPMENT HEIGHT WITH OVERHEAD CARGO/MAINTENANCE RACK INSTALLED (TRAVEL CLEARANCE REQUIRED)

Handrails at full extension – 126.2 inches
Handrails at intermediate extension – 109 inches
Handrails removed – 87 inches

EQUIPMENT MEASUREMENTS

	WIDTH	LENGTH	HEIGHT
SECM Assembly	85.25”	121.5”	Refer to Equipment Height Paragraph
Main Box Assembly		86”	
Large back portion	49”	45”	56”
Small front portion	37”	41”	33”
Side Box Assemblies	18”	45”	34”
Overhead Cargo/Maintenance Rack Assembly	82”	76”	

End of Work Package

SHOP EQUIPMENT CONTACT MAINTENANCE (SECM) THEORY OF OPERATION

The Army SECM provides a relatively large and weather resistant tool and repair parts container installed on the HMMWV. The container assembly is composed of four primary components, along with appropriate attaching parts and hardware. When installed on the HMMWV (an associated item of equipment (ASIOE) to the SECM System), the unit becomes a highly mobile system capable of providing contact maintenance to all army aircraft. The vehicle/container can be outfitted with tool sets from the New Aircraft Tool System (NATS), as well as repair parts and other supplies in support of contact maintenance missions for all army aircraft. The contact maintenance mission is to repair any downed aircraft, as far forward on the battle field as possible, thereby returning the aircraft to it's mission or allowing a one time flight to a repair facility thereby avoiding destruction or capture of the aircraft. The SECM Container is also storable off-vehicle, which allows the container to function as a temporary storage facility for tools and repair parts.

CHAPTER 2

OPERATOR INSTRUCTIONS
FOR
SHOP EQUIPMENT CONTACT MAINTENANCE
(SECM)

SHOP EQUIPMENT CONTACT MAINTENANCE (SECM) DESCRIPTION AND USE OF OPERATOR CONTROLS AND INDICATORS

Not Applicable

SHOP EQUIPMENT CONTACT MAINTENANCE (SECM) OPERATION UNDER USUAL CONDITIONS

OVERHEAD RACK

CAUTION

Overloading overhead rack can cause damage to rack and HMMWV.

When stowing equipment on overhead rack, care must be taken not to overload. Overhead rack is not designed to carry more than 500 pounds. Heavy items should be loaded toward rear, as much as possible. Insure that equipment is secured to rack tie-down rings.

LEFT HAND AND RIGHT HAND SIDE BOX DOORS

WARNING

Failure to use locking pins could allow door to fall, causing injury to personnel.

Each side box is equipped with a locking pin. When doors are opened, insert locking pin in door stay to secure door in raised position.

OVERHEAD SLIDER DOOR

Disengage the slider door from latched position by forcefully pushing upward on the door. This will shift the door into sliding position. The door slides toward the front of the HMMWV.

Close the slider door by sliding it to the rear of the HMMWV and pressing the door down into latched position. Use the latches on the sides to lock the door down.

MAIN BOX

CAUTION

Secure stored equipment prior to moving SECM.

It is essential that heavy items be secured in place, prior to moving, when stored in main box. Movement of SECM will cause shifting of items within this storage facility. Damage to stored items and to main box will result by loose equipment.

SHOP EQUIPMENT CONTACT MAINTENANCE (SECM) OPERATION UNDER UNUSUAL CONDITIONS

COLD

When operating in cold conditions, do not move SECM from a cold area to a warm area more often than necessary. Doing so will cause condensation within SECM and on stored equipment.

HEAT

When operating in hot climates, always attempt to park SECM out of direct sunlight. Direct sun on a closed SECM can cause temperatures to exceed safe limits on stored equipment (especially batteries). If shade is not available, and no blowing dust is evident, open doors for ventilation.

CHAPTER 3

TROUBLESHOOTING PROCEDURES FOR SHOP EQUIPMENT CONTACT MAINTENANCE (SECM)

SHOP EQUIPMENT CONTACT MAINTENANCE (SECM) TROUBLESHOOTING INDEX

SCOPE

This section provides information for maintenance personnel to use in locating the cause of SECM malfunctions. WP 0008, Table 1 lists malfunction symptoms; their probable causes; and the corrective action to be applied. A proper description of the fault from the users of the SECM can reduce the time spent in locating the fault.

INDEX

SECM Troubleshooting ..... WP 0008, Table 1

SHOP EQUIPMENT CONTACT MAINTENANCE (SECM) TROUBLESHOOTING PROCEDURES

Table 1. SECM Troubleshooting

MALFUNCTION	PROBABLE CAUSE	CORRECTIVE ACTION
Water or sand inside SECM	Doors not shut properly	Shut doors securely
	Door seals worn or broken	Inspect and replace damaged seals using appropriate instructions (WP 0015 00, WP 0016 00, WP 0018 00 or WP 0019 00)
Doors hard to close	Rusty door hinges	Oil hinges with lubricating oil (Item 7, Table 1, WP 0031 00.
	Hinges broken	Replace hinges using appropriate instructions (WP 0014 00 – WP 0016 00, WP 0018 00 or WP 0019 00)
	Sand in hinges	Clean hinges with compressed air

CHAPTER 4

MAINTENANCE INSTRUCTIONS FOR SHOP EQUIPMENT CONTACT MAINTENANCE (SECM)

SHOP EQUIPMENT CONTACT MAINTENANCE (SECM) SERVICE UPON RECEIPT

INITIAL SETUP

Tools And Special Tools:
Tool Kit Acft. Maint, B01 (Table 2, WP 0025 00)

Personnel Required:
Two MOS 67 Series or MOS 68 Series

References:
TM 9-2320-280-10, TRUCK, UTILITY: HEAVY VARIANT, 4X4, M1097 (2320-01-346-9317) (EIC: BBM); M1097A2
SECM Assembled (WP 0020 00)

VEHICLE PREPARATION

1. Prior to mounting container ensure canvas components are installed in accordance with instructions contained in TM 9-2320-280-10.
2. At vehicle windshield (Figure 1), remove upper hinge bolt (1), flat washer (2), and lock washer (3) from each of three window hinge locations across windshield and store with Organizational Maintenance.

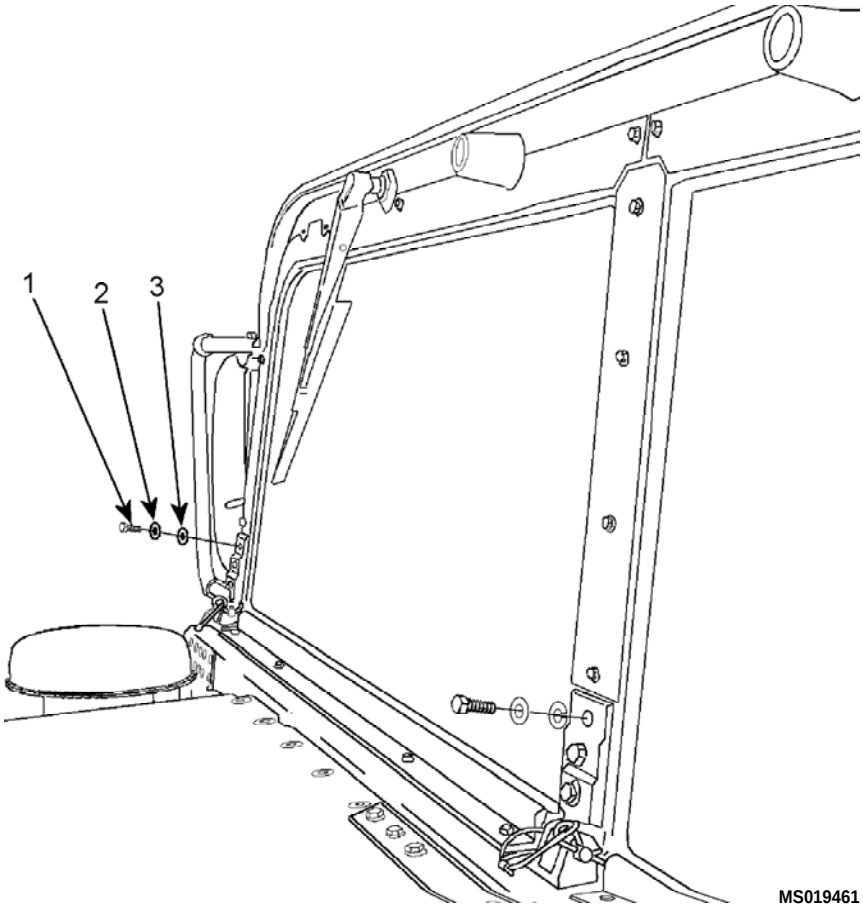

Figure 1. Windshield Bolt (Typical 3 Places)

3. At vehicle cargo bed, remove tie down rings (three in rear, two forward in between front seats) and any other hardware that may be attached to floor or fender wells and store with Organizational Maintenance. Floor and fender wells should be clean and free of all appendages, dirt and corrosion. Remove plywood insulation between rear seats if it has been previously installed (Figure 2).

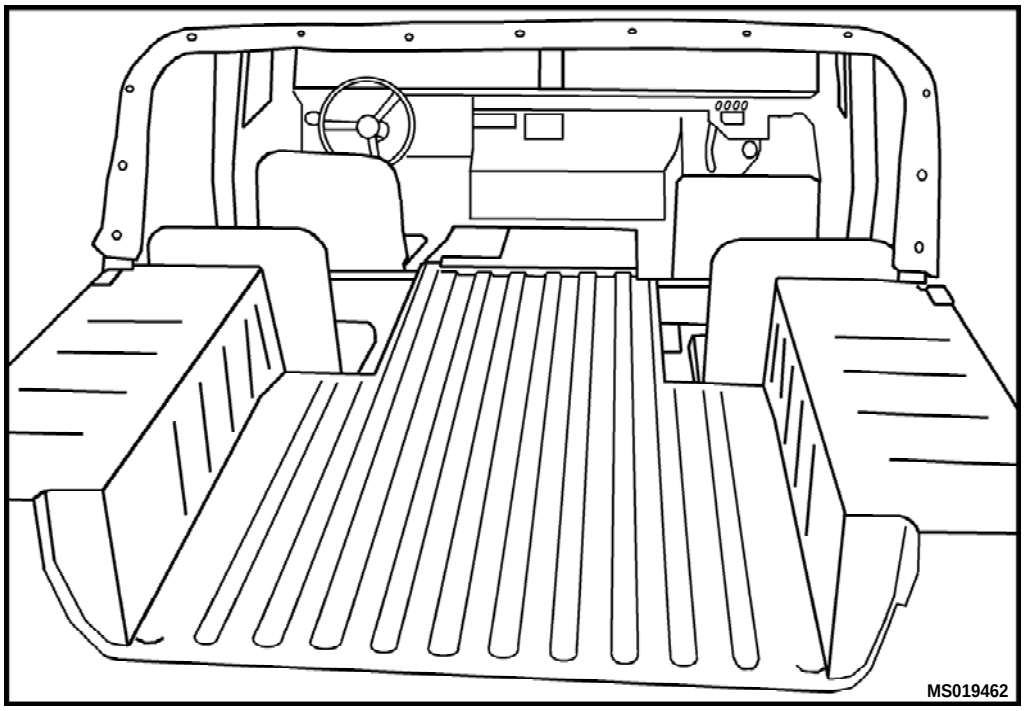

Figure 2. Cargo Bed Area

4. At rear of vehicle cab, remove and retain rear cab curtain and associated hardware as per instructions contained in TM 9-2320-280-10 and store with Organizational Maintenance.

SECM INSTALLATION

1. Follow procedures identified in WP 0020 00, SECM Assembly of Major Components.

End Of Work Package

SHOP EQUIPMENT CONTACT MAINTENANCE (SECM) PMCS INTRODUCTION

INITIAL SETUP

Tools And Special Tools:
Tool Kit Acft. Maint, B01 (Table 2, WP 0025 00)

Personnel Required:
One MOS 67 Series or MOS 68 Series

References:
Expendable and Durable Items List (Table 1, WP 0031 00)
Repair Parts and Special Tools List Introduction (WP 0026 00)
Repair Parts and Special Tools List (WP 0027 00)
Maintenance Allocation Chart (Table 1, WP 0025 00)

Equipment Conditions:
SECM Assembled (WP 0020 00)

COMMON TOOLS, SPECIAL TOOLS, CONSUMABLE MATERIAL, AND REPAIR PARTS

Common tools required to perform maintenance on SECM are in the Aviation General Mechanic's Tool Kit.

CONSUMABLE MATERIAL

For information relating to consumable materials, refer to the Expendable and Durable Items List (WP 0031 00).

REPAIR PARTS

For information relating to repair parts, refer to Repair Parts and Special Tools List Introduction (WP 0026 00) and Repair Parts and Special Tools List (WP 0027 00).

SCHEDULED MAINTENANCE ACTION INDEX

WP 0025 00, Table 1 identifies the scheduled maintenance actions to be performed on SECM by organizational through general support personnel.

SHOP EQUIPMENT CONTACT MAINTENANCE (SECM)
PMCS

Table 1. PMCS Schedule

PROCEDURE	AFTER EACH MISSION	SEMI-ANNUALLY	USE HMWWV SCHEDULE	ACTION
Check for missing or damaged parts	X	X		Replace as needed per WP 0013 00 through 0019 00.
Check for missing paint		X		Touch-up Paint per WP 0013 00 through 0019 00.
Clean SECM			X	Clean SECM when HMMWV is cleaned

SHOP EQUIPMENT CONTACT MAINTENANCE (SECM) REMOVAL OF MAJOR COMPONENTS

INITIAL SETUP

Tools And Special Tools:
Tool Kit Acft. Maint, B01 (Table 2, WP 0025 00)

Equipment Conditions:
SECM Assembled (WP 0020 00)

Personnel Required:
Six MOS 67 Series or MOS 68 Series

OVERHEAD CARGO/MAINTENANCE RACK ASSEMBLY REMOVAL

WARNING

At least four people are required to lift and handle the Overhead Cargo/Maintenance Rack Assembly. The assembly weighs approximately 228 pounds.

CAUTION

Care should be taken when lowering Overhead Cargo/Maintenance Rack Assembly to prevent damage to canvas components of HMMWV.

CAUTION

Overhead Cargo/Maintenance Rack Assembly should remain manually supported until all attaching hardware has been removed.

NOTE

Retain all attaching hardware for future installation.

1. Fold vehicle side mirrors in, chock wheels and set brakes before work begins.
2. Remove all contents from the Overhead Cargo/Maintenance Rack Assembly.
3. Remove safety bars (1) and unlatch safety chains (2). (Figure 1)
4. Remove locking pin (3) from each handrail nest, extract handrails and replace locking pins in nests.
5. Remove locking pins (4) and collapse handrail assembly extensions (5).
6. Descend ladder (6) to ground.
7. Remove locking pins (7) from ladder stabilizer (8) and fold into storage position. Replace locking pins (7).
8. Remove locking pins (9) from ladder (6).
9. Lift ladder (6) from slots.
10. Replace locking pins (9) in Overhead Cargo/Maintenance Rack Assembly.

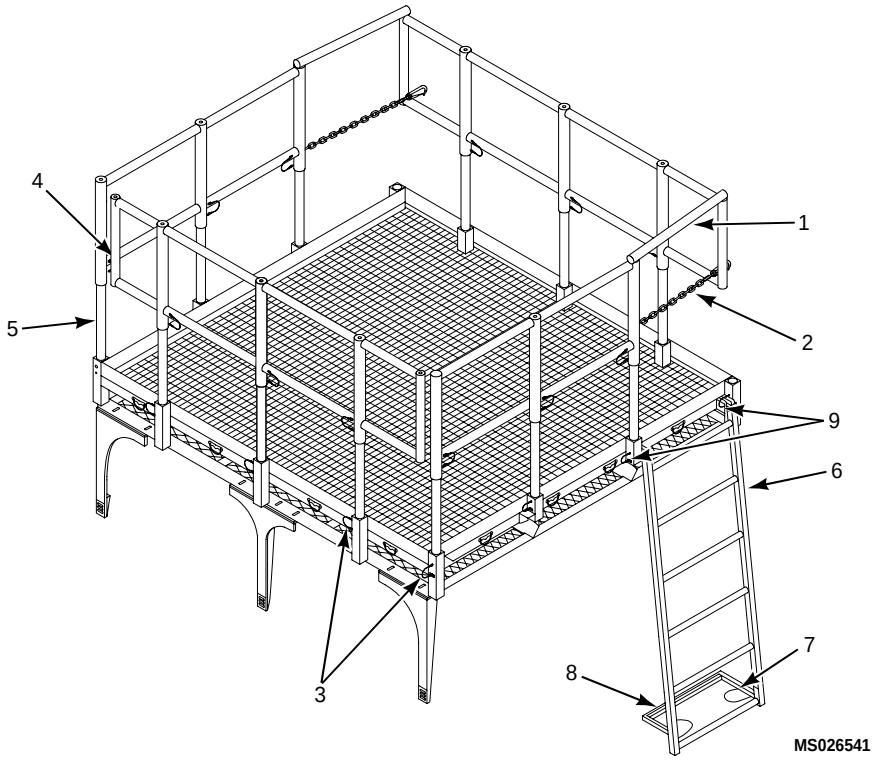

Figure 1. Removing Handrail Assemblies and Ladder

11. Stow ladder assembly in rear storage area (1) and secure with strap. (Figure 2)
12. Stow front and rear handrail assemblies in front storage area (3) with extensions facing aft end of rack assembly and secure with strap.

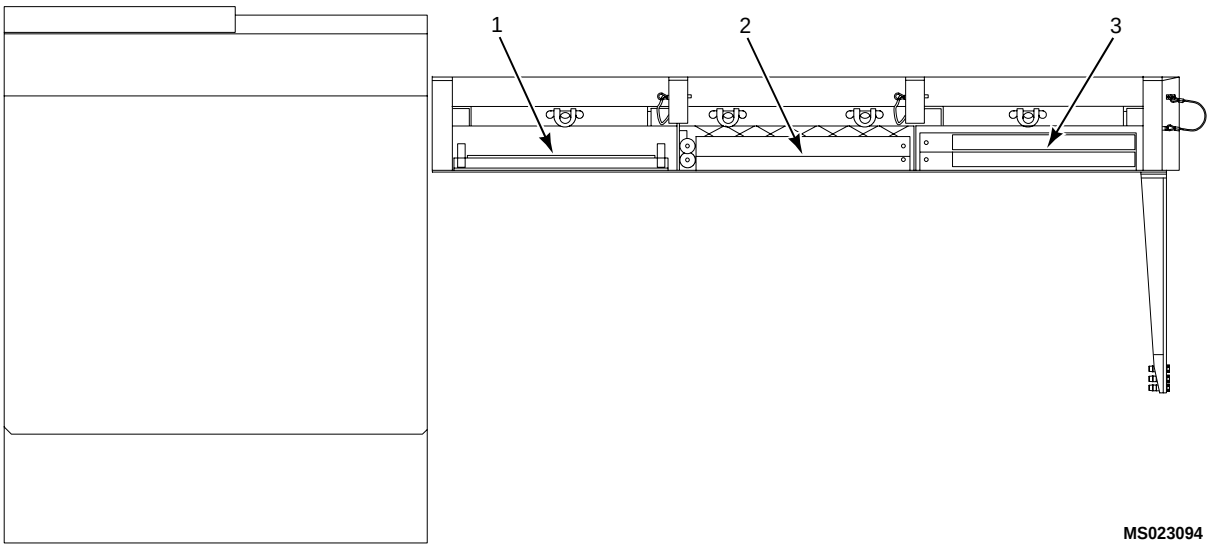

Figure 2. Storage Areas

13. Secure chain assemblies (1) on each side handrail assembly with bungee cords (2) to handrail (forming “V” configuration) so that chains do not interfere with grating. (Figure 3)
14. Stow the 2 side handrail assemblies in curbside center storage area (2) and secure with strap. (Figure 2)

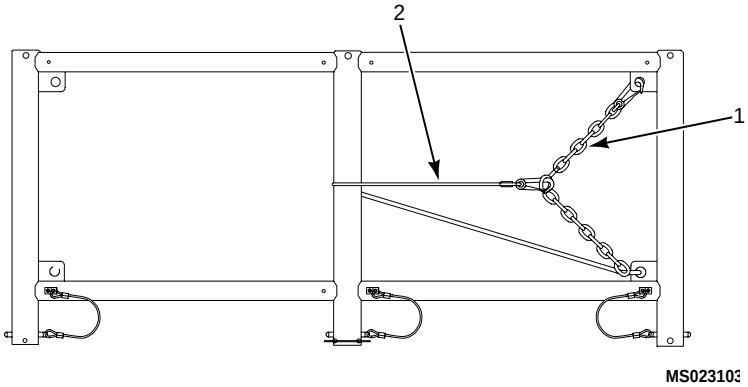

Figure 3. Side Handrail Assembly Preparation for Storage

15. Secure 2 handrail safety bars (1) to Safety Rail Assembly Mount (2) with Velcro straps (3) and stow in roadside center storage shelf.
16. Secure Safety Rail Assembly Mount with web strap (4). (Figure 4)

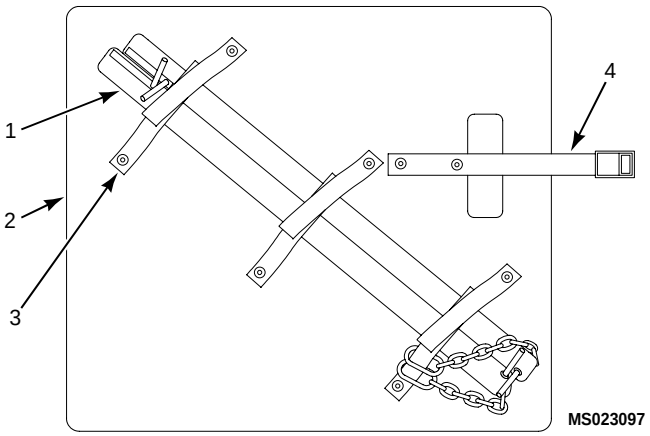

Figure 4. Handrail Safety Bars Stowed on Safety Rail Assembly Mount

17. While manually supporting the Overhead Cargo/Maintenance Rack Assembly, disconnect the assembly from the three front supports (1, 2 and 3) by removing 8 bolts (4), flat washers (5), lock washers (6), nuts (7) and all shims (8 and 9). (Figure 5)
18. Remove 2 bolts (10), flat washers (11), lock washers (12) and nuts (13) securing assembly to Angle Support (14) at rear of rack assembly.
19. Lift and remove Overhead Cargo/Maintenance Rack Assembly from top of HMMWV.

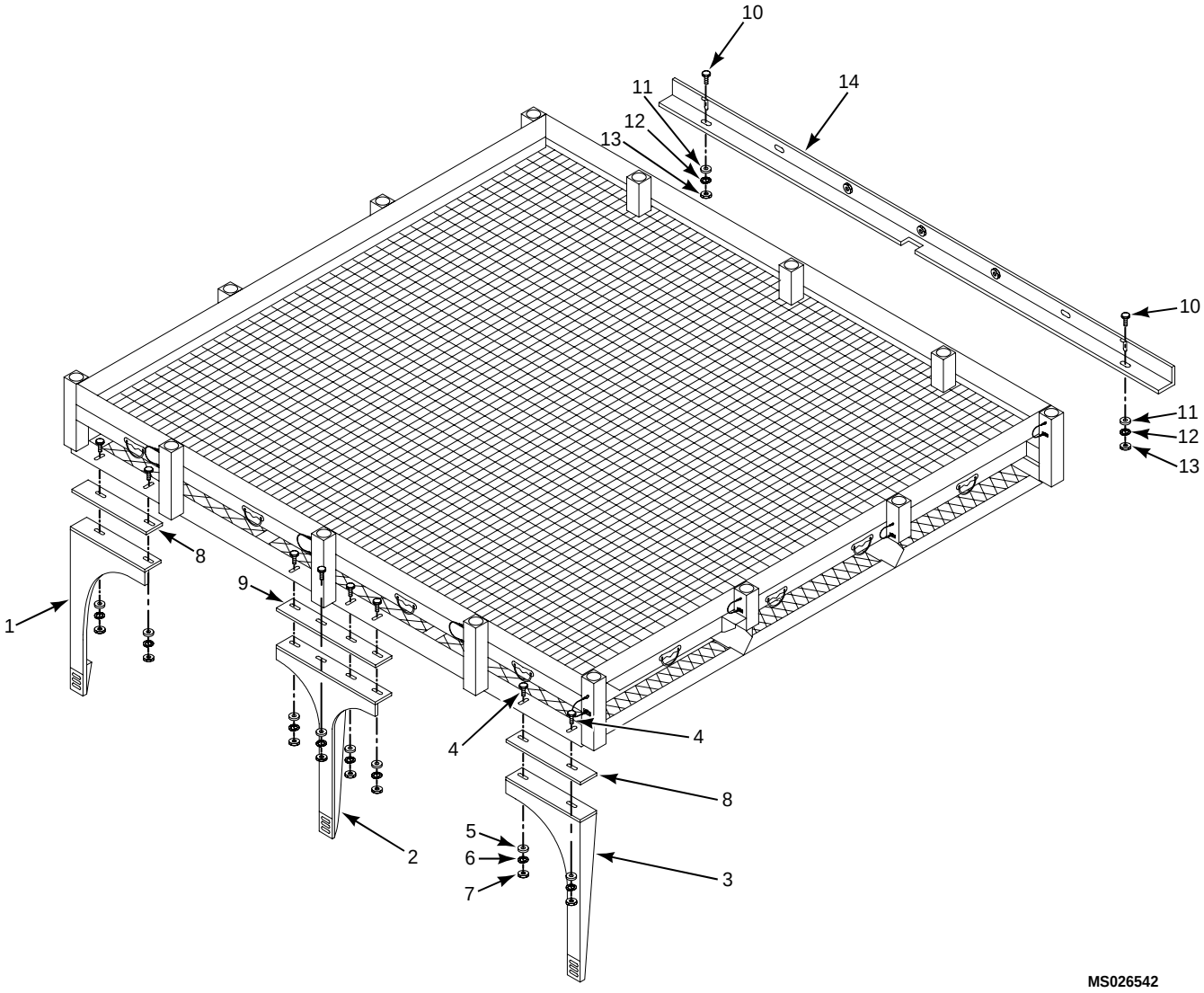

Figure 5. Overhead Cargo/Maintenance Rack Assembly Removal

LEFT AND RIGHT SIDE BOX ASSEMBLIES REMOVAL

NOTE

The following steps are to be completed for each side box.

1. Remove all contents from side box prior to its removal.

NOTE

Retain attaching hardware for future installation.

2. Remove 4 bolts (1), 4 nuts (2), 4 lock washers (3), 4 flat washers (4), 4 rubber washers (5) and 4 curved backing plates (6). (Figure 2)
3. Remove side box assembly (7) and pad (8).

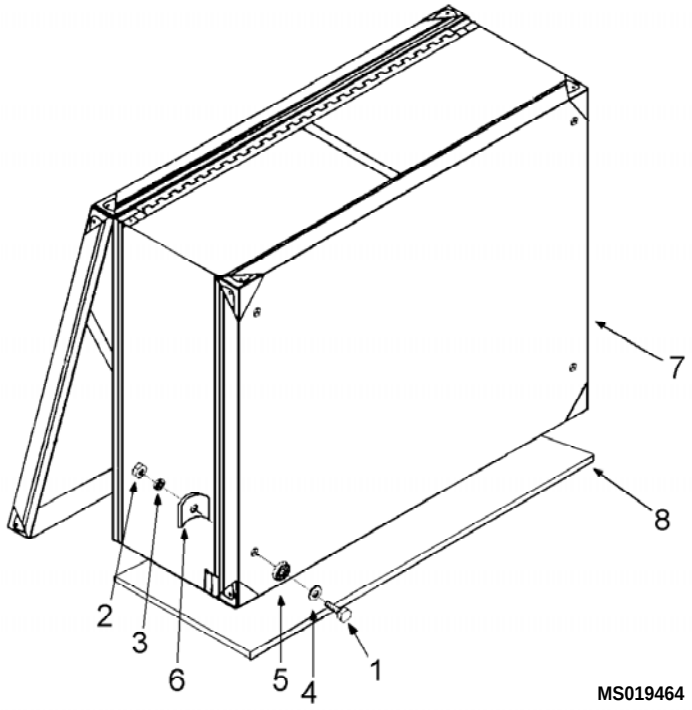

Figure 6. Side Box Assembly Removal

MAIN BOX ASSEMBLY REMOVAL

1. Remove all contents of main box prior to its removal.

NOTE

Retain attaching hardware for future installation.

2. Remove three bolts (1), three lock washers (2) and three flat washers (3) at the rear of HMMWV. (Figure 3)
3. Remove two bolts (4), two lock washers (5) and two flat washers (6) from front of Main Box Assembly.

WARNING

Six people are required to lift and move main box assembly. Main box must be empty of all contents.

NOTE

A forklift with at least 40-inch tines may also be used to lift main box assembly.

4. Slide main box to rear of vehicle. Use lifting handles located on sides and front of main box or forklift to move box to the ground.
5. Remove two spacer plates (7).
6. Remove rear cab curtain and install original equipment canvas and associated hardware as per instructions contained in TM 9-2320-280-10.

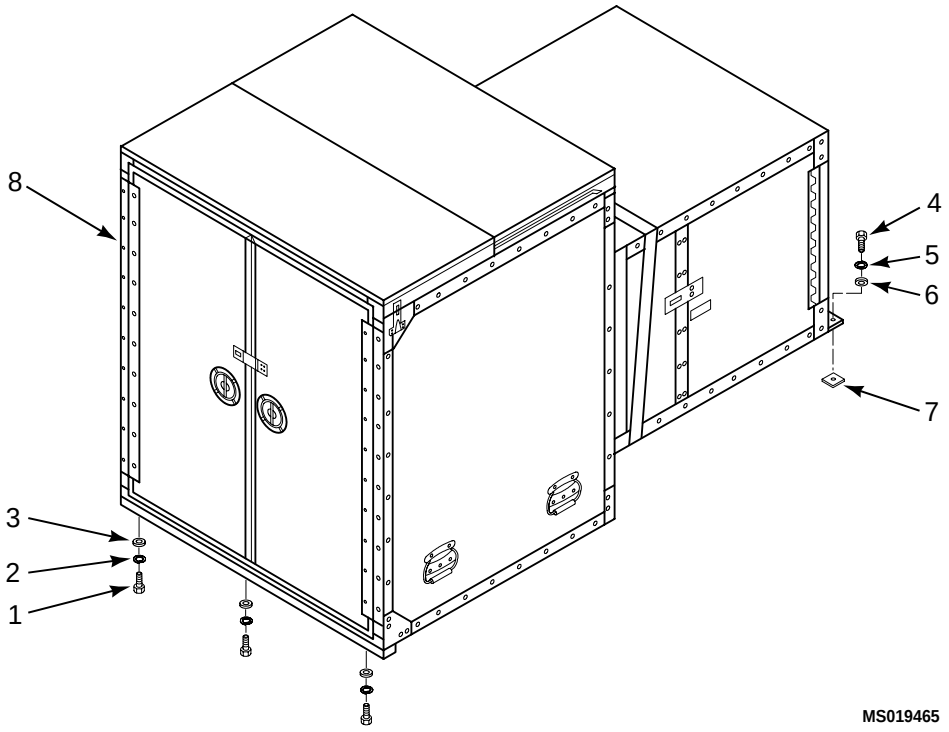

Figure 7. Main Box Assembly Removal

End Of Work Package

SHOP EQUIPMENT CONTACT MAINTENANCE (SECM)
MAIN BOX COMPONENT

INITIAL SETUP

Tools And Special Tools:
Tool Kit Acft. Maint, B01 (Table 2, WP 0025 00)

Materials/Parts:
MIL-P-23377, Primer (Item 8, WP 0031 00)
MIL-C-22750, Number 34094 (Green 383) (Item 9, WP 0031 00)
Number 8802 extrudable sealant (Item 4, WP 0031 00)

Personnel Required:
One MOS 67 Series or MOS 68 Series

References:
TM 1-1500-204-23-10
Repair Parts and Special Tools List (WP 0027 00)
TM 43-0139

Equipment Conditions:
Side boxes, Overhead Rack and Main Box removed from HMMWV (WP 0012 00)

DISASSEMBLY

NOTE

Only disassemble as far as necessary to get to the part to be replaced.

NOTE

Contents must be removed from Main Box prior to disassembly.

1. Remove 30 rivets (1), 6 handles (2) and 6 backing plates (3) from sides and front of main box assembly. (Figure 1)
2. Remove tie down straps (4) from shelves (5 and 6).
3. Lift and remove back shelf (5) and front shelf (6).
4. Remove 8 shelf brackets (7).
5. Remove storage tray (8).
6. Remove Velcro (9).
7. Remove 24 rivets (10) and 4 shelf supports (11).
8. Remove 12 rivets (12) and 4 shelf supports (13).
9. Slide rear mounting bar (14) out the side of main box assembly.

REPAIR OR REPLACEMENT

Bonded Panel Repairs

NOTE

Core material used in these panels is end core balsa, with a thickness of 0.25 in.

1. Bonded panel repairs will be completed in accordance with Chapter 9 of TM 1-1500-204-23-10. Material listing for repair supplies will be found in WP 0031 00.

TOUCH-UP PAINTING

WARNING

Chemical agent resistant coating (CARC) is extremely toxic and flammable. Never use where sparks, smoking or open flame may be present. CARC, if improperly used, may cause long term health problems. Avoid contact with skin, breathing of fumes, or ingestion of dried particles. Use must be monitored by local safety office and preventive medicine support activity. Refer to TM 43-0139 for applicable safety precautions prior to removal or application of CARC.

1. Prime surfaces with MIL-P-23377, Primer (Item 8, WP 0031 00) and paint with MIL-C-22750, Number 34094 (Green 383) (Item 9, WP 0031 00) in accordance with TM 43-0139.

ASSEMBLY

1. Attach 4 24” Shelf Supports (13) in the front portion of the Main Box Assembly using 12 rivets (12).
2. Attach 4 48” Shelf Supports (11) in the back portion of the Main Box Assembly using 24 rivets (10).
3. Attach Velcro (9) to outside of front portion of Main Box Assembly 1” from back portion at the bottom angling to 4” away at the top.
4. Attach a shelf bracket (7) at level heights for each portion of the Main Box Assembly.
5. Set back shelf (5) and front shelf (6) on the shelf brackets (7).
6. Attach 6 handles (2) and 6 backing plates (3) using 30 rivets (1).
7. Seal all outside joints, seams, bolts and rivet heads with Number 8802 extrudable sealant (Item 4, WP 0031 00).
8. Place storage tray (8) in Main Box Assembly.
9. Insert rear mounting bar (14)
10. Secure tie-down straps (4) to shelves (5 and 6).

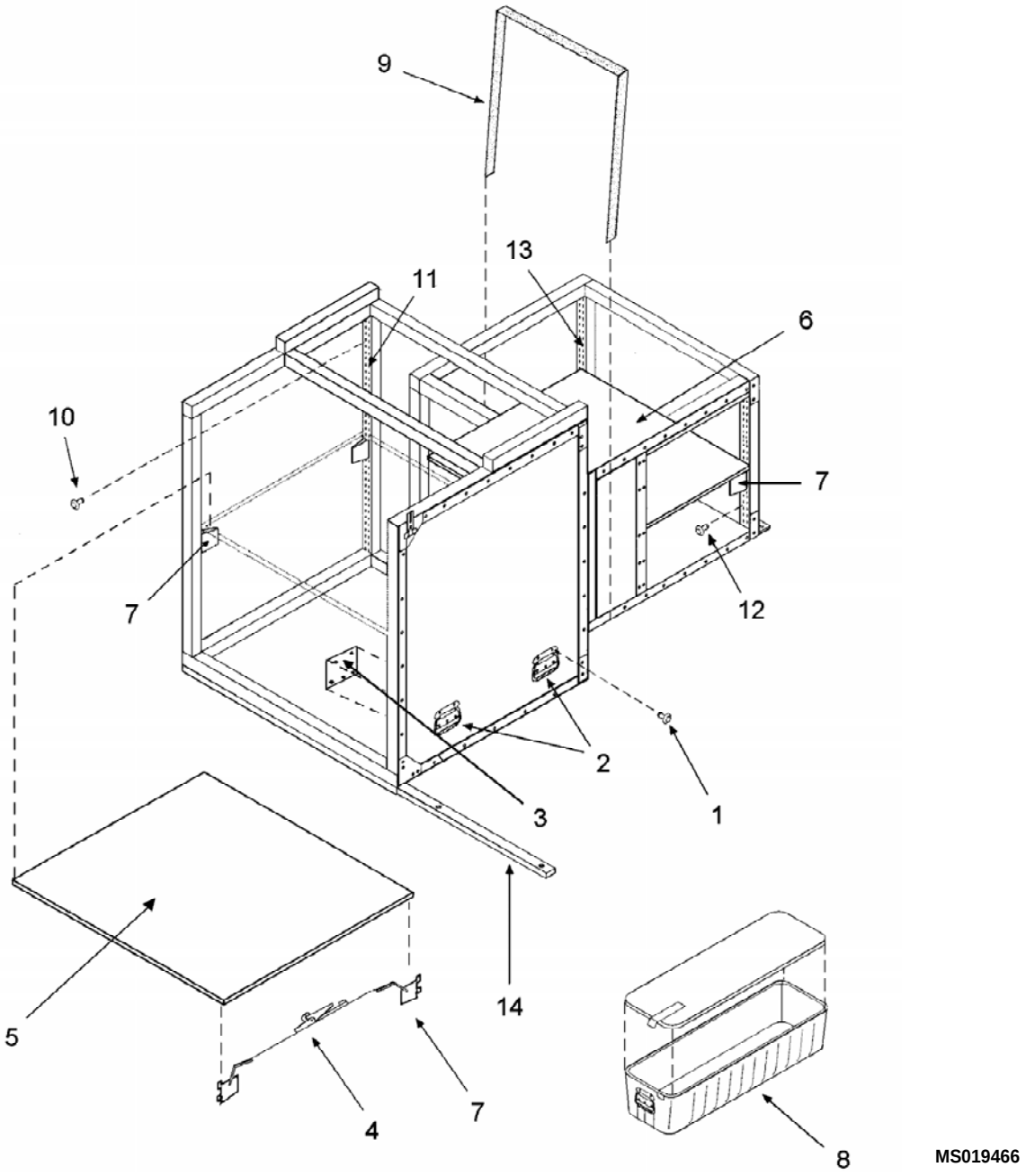

Figure 1. Main Box Disassembly

End of Work Package

SHOP EQUIPMENT CONTACT MAINTENANCE (SECM) FRONT DOOR COMPONENT

INITIAL SETUP

Tools And Special Tools:
Tool Kit Acft. Maint, B01 (Table 2, WP 0025 00)

Materials/Parts:
MIL-P-23377, Primer (Item 8, WP 0031 00)
MIL-C-22750, Number 34094 (Green 383) (Item 8, WP 0031 00)
Number 8802 extrudable sealant (Item 4, WP 0031 00)

Personnel Required:
One MOS 67 Series or MOS 68 Series

References:
TM 1-1500-204-23-10
Repair Parts and Special Tools List (WP 0027 00)
TM 43-0139

Equipment Conditions:
SECM Assembled (WP 0020 00)

DISASSEMBLY

NOTE

Only disassemble as far as necessary to get to the part to be replaced.

1. Remove 10 rivets (1), hinge (2) and door (3). (Figure 1)

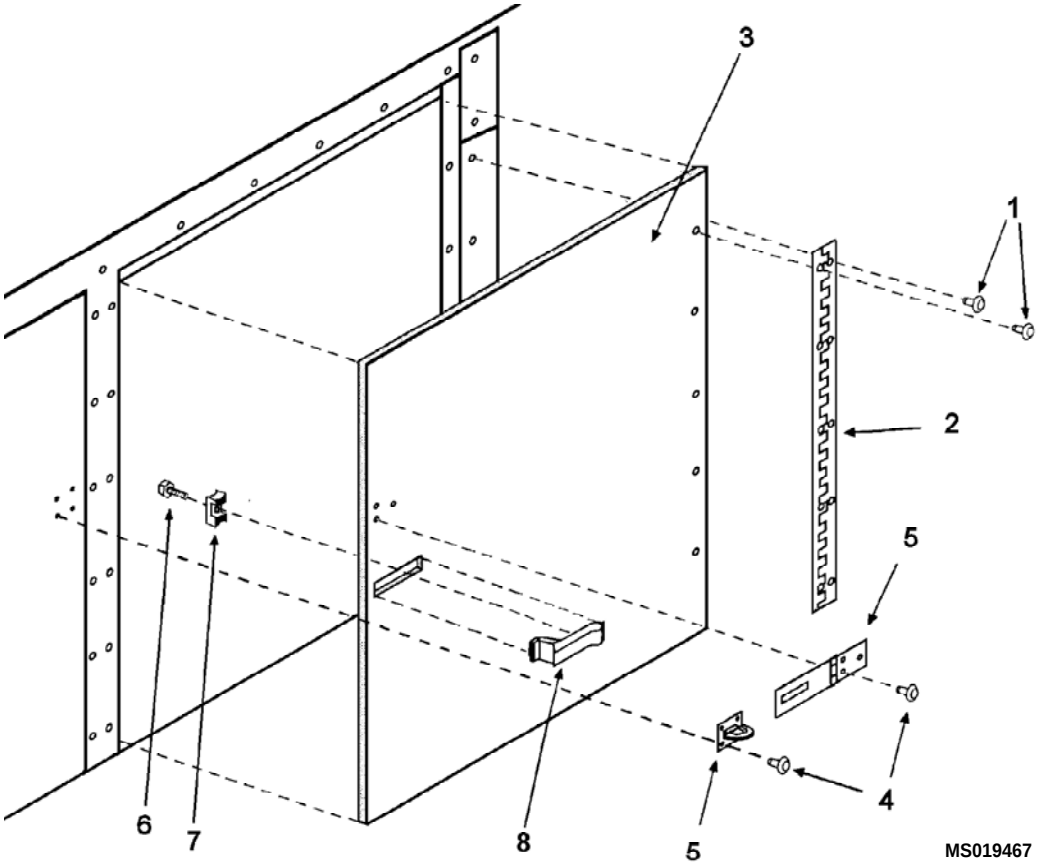

Figure 1. Main Box Assembly Front Door

2. Remove 7 rivets (4) and hasp and staple (5).

3. Remove bolt (6) and mounting bracket (7) from latch (8).
4. Swing latch (8) toward outside of door (3) and remove.

REPAIR OR REPLACEMENT

Bonded Panel Repairs

NOTE

Core material in these panels is end core balsa, with a thickness of 0.250 in.

1. Bonded panel repairs will be completed in accordance with Chapter 9 of TM 1-1500-204-23-10. Material listing for repair supplies will be found in WP 0031 00.

TOUCH-UP PAINTING

WARNING

Chemical agent resistant coating (CARC) is extremely toxic and flammable. Never use where sparks, smoking or open flame may be present. CARC, if improperly used, may cause long term health problems. Avoid contact with skin, breathing of fumes, or ingestion of dried particles. Use must be monitored by local safety office and preventive medicine support activity. Refer to TM 43-0139 for applicable safety precautions prior to removal or application of CARC.

1. Prime surfaces with MIL-P-23377, Primer (Item 8, WP 0031 00) and paint with MIL-C-22750, Number 34094 (Green 383) (Item 9, WP 0031 00) in accordance with TM 43-0139.

ASSEMBLY

1. Insert latch (8) into latch opening of door (3).
2. On inside of door (3), place mounting bracket (7) over latch (8) and line up bolt holes.
3. Insert bolt (6) into bolt hole and tighten until latch is secure in door (3).
4. Attach hasp and staple (5) to door (3) and main box assembly with 7 rivets (4).
5. Attach hinge (2) to door (3) with 5 rivets (1).
6. Attach hinge (2) to main box assembly with 5 rivets (1).
7. Seal all outside joints, seams, bolts and rivet heads with Number 8802 extrudable sealant (Item 4, WP 0031 00).

End Of Work Package

SHOP EQUIPMENT CONTACT MAINTENANCE (SECM) SLIDER DOOR COMPONENT

INITIAL SETUP

Tools And Special Tools:
Tool Kit Acft. Maint., B01 (Table 2, WP 0025 00)

Materials/Parts:
100 Grit Paper, (Item 6, WP 0031 00)
Acetone, (Item 1, WP 0031 00)
Permabond Cyanoacrylate (Superglue) Adhesive, (Item 2, WP 0031 00)
MIL-P-23377, Primer (Item 8, WP 0031 00)
MIL-C-22750, Number 34094 (Green 383) (Item 9, WP 0031 00)
Number 8802 extrudable sealant (Item 4, WP 0031 00)

Personnel Required:
One MOS 67 Series or MOS 68 Series

References:
TM 1-1500-204-23-10
Repair Parts and Special Tools List (WP 0027 00)
TM 43-0139

Equipment Conditions:
SECM Assembled (WP 0020 00)

DISASSEMBLY

NOTE

Only disassemble as far as necessary to get to the part to be replaced.

1. Open tailgate, then open back doors of SECM.
2. Unlatch 2 slider door draw latches (1). (Figure 1)
3. Push upward (large arrow) on the back edge of slider door to disengage door (2) from latched position (3) to sliding position (4).
4. Slide door open until bolts (5) align with open slots (6) in rail, then raise door off Main Box (7).

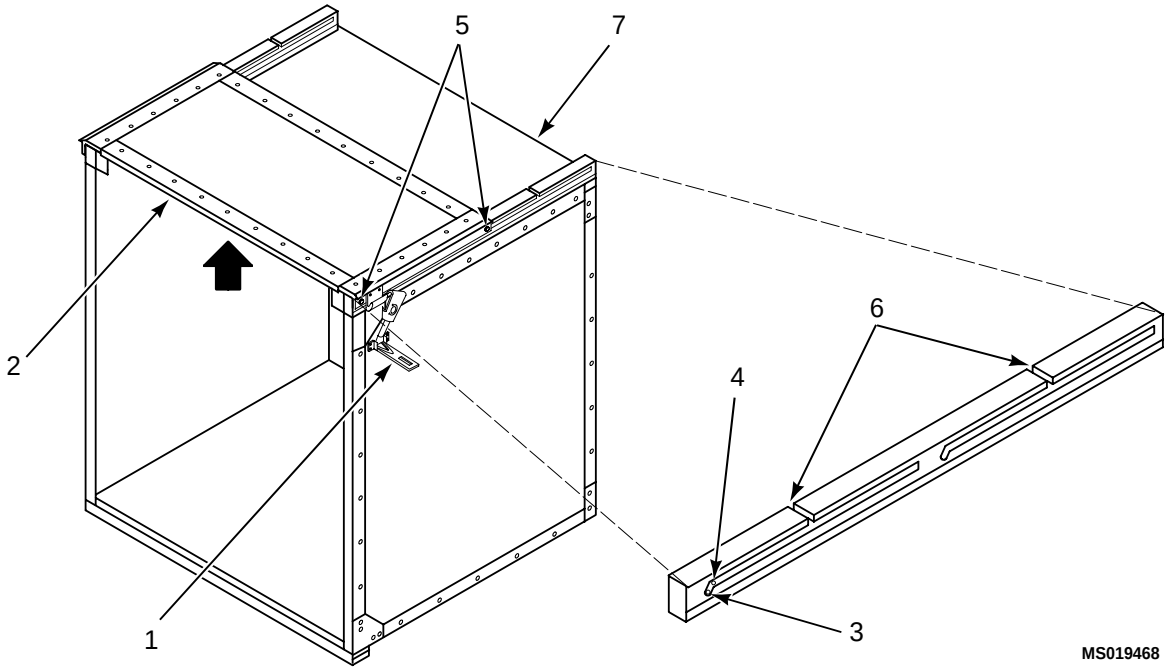

Figure 1. Main Box Assembly Slider Door

5. Peel seal (1) from the door (2). (Figure 2)

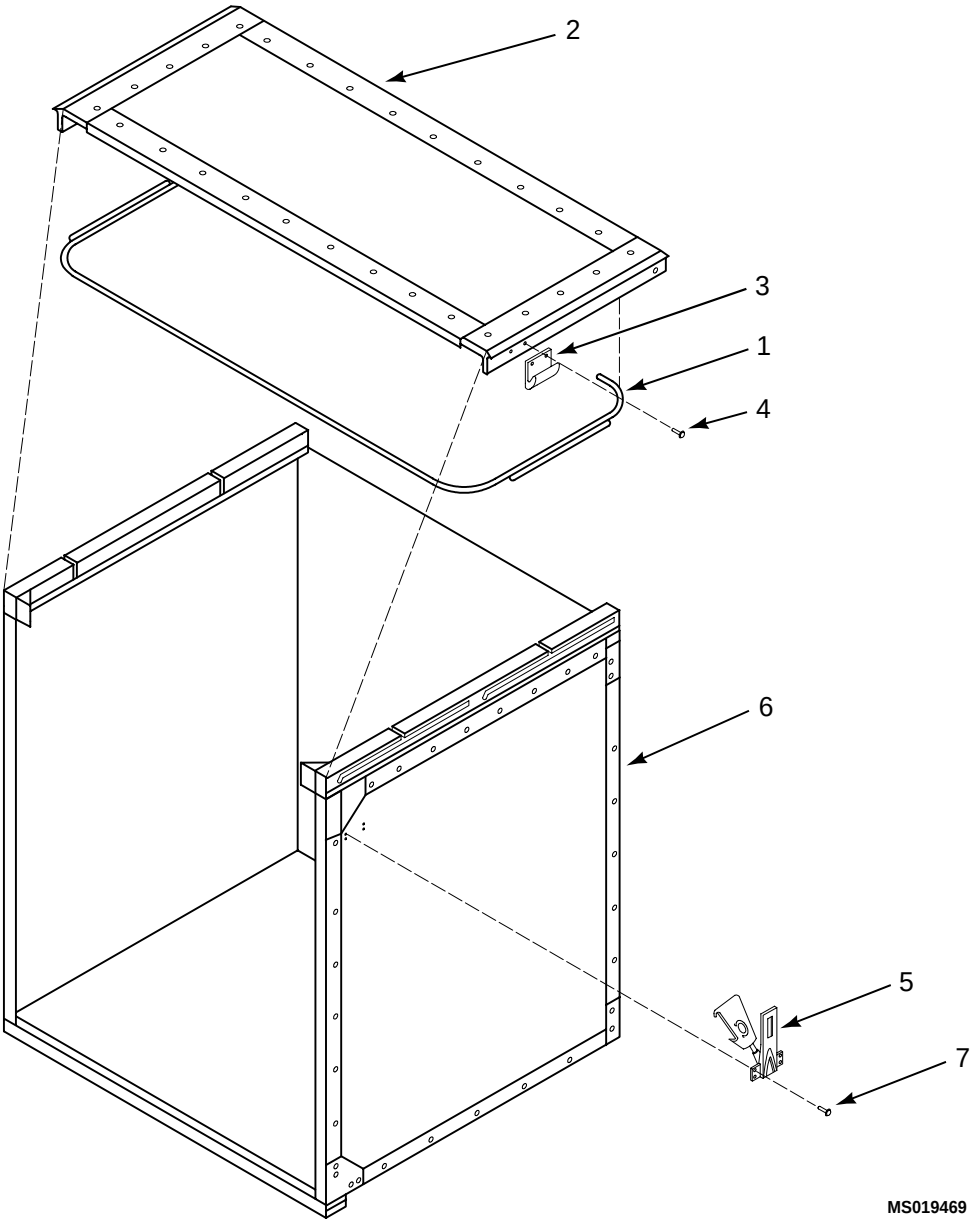

Figure 2. Slider Door Disassembly

6. Remove 2 striker plates (3) from door (2) by removing 4 rivets (4).
7. Remove 2 draw latches (5) from main box (6) by removing 8 rivets (7).

REPAIR OR REPLACEMENT

Bonded Panel Repairs

NOTE

Core material in these panels is end core balsa, with a thickness of 0.250 in.

1. Bonded panel repairs will be completed in accordance with Chapter 9 of TM 1-1500-204-23-10. Material listing for repair supplies will be found in WP 0031 00.

Replacing Door Seal

1. Once seal (1) has been peeled from door (2), remove old adhesive, oxidation, dirt, and /or other contaminates from door seal area. (Figure 2)
2. Rough sand door seal seat area with 100 Grit Paper, (Item 6, WP 0031 00), or similar, to prepare surface for adhesive.
3. Clean roughened area with acetone (Item 1, WP 0031 00).
4. Apply permabond cyanoacrylate (superglue) adhesive, (Item 4, WP 0031 00), in a continuous bead on front, back, and edge of door seal seat area.
5. Place new seal on door and hold in place for approximately 3 to 5 minutes to allow adhesive to set.

TOUCH-UP PAINTING

WARNING

Chemical agent resistant coating (CARC) is extremely toxic and flammable. Never use where sparks, smoking or open flame may be present. CARC, if improperly used, may cause long term health problems. Avoid contact with skin, breathing of fumes, or ingestion of dried particles. Use must be monitored by local safety office and preventive medicine support activity. Refer to TM 43-0139 for applicable safety precautions prior to removal or application of CARC.

6. Prime surfaces with MIL-P-23377, Primer (Item 8, WP 0031 00) and paint with MIL-C-22750, Number 34094 (Green 383) (Item 9, WP 0031 00) in accordance with TM 43-0139.

ASSEMBLY

1. If seal (1) has been removed from door (2), attach new seal following instructions in Replacing Door Seal above. (Figure 2)
2. Attach striker plates (3) to door (2) with 4 rivets (4).
3. Attach 2 draw latches (5) to main box assembly (6) with 8 rivets (7).
4. Place door (2) on main box assembly (7) aligning bolts (5) with open slots in rails (6). (Figure 1)

End Of Work Package

SHOP EQUIPMENT CONTACT MAINTENANCE (SECM)
BACK DOOR COMPONENT

INITIAL SETUP

Tools and Special Tools:
Tool Kit Acft. Maint, B01 (Table 2, WP 0025 00)

Materials/Parts:
100 Grit Paper, (Item 6, WP 0031 00)
Acetone, (Item 1, WP 0031 00)
Permabond Cyanoacrylate (Superglue) Adhesive, (Item 2, WP 0031 00)
MIL-P-23377, Primer (Item 8, WP 0031 00)
MIL-C-22750, Number 34094 (Green 383) (Item 9, WP 0031 00)
Number 8802 extrudable sealant (Item 4, WP 0031 00)

Personnel Required:
One MOS 67 Series or MOS 68 Series

References:
TM 1-1500-204-23-10
Repair Parts and Special Tools List (WP 0027 00)
TM 43-0139

Equipment Conditions:
SECM Assembled (WP 0020 00)

DISASSEMBLY

NOTE

Only disassemble as far as necessary to get to the part to be replaced.

NOTE

The following steps should be performed for each door.

1. Remove 3 rivets (1) and hasp (2) or 4 rivets (1) and staple (2). (Figure 1 on next page)
2. Remove 20 rivets (3), hinge (4) and door (5 or 6).
3. Remove 11 rivets (7) and door stop (8) from left door (5).
4. Remove door seal (9 or 10).
5. Loosen 2 locking bolts (11).
6. Turn D-ring lock handle (12), causing rods (13) to become disengaged from blocks (14).
7. Turn 2 rods (13) 1/4 turn and remove from D-ring lock (12).
8. Remove 4 rivets (15) and D-ring lock (12) with handle.
9. Remove 8 rivets (16) and 2 blocks (14).

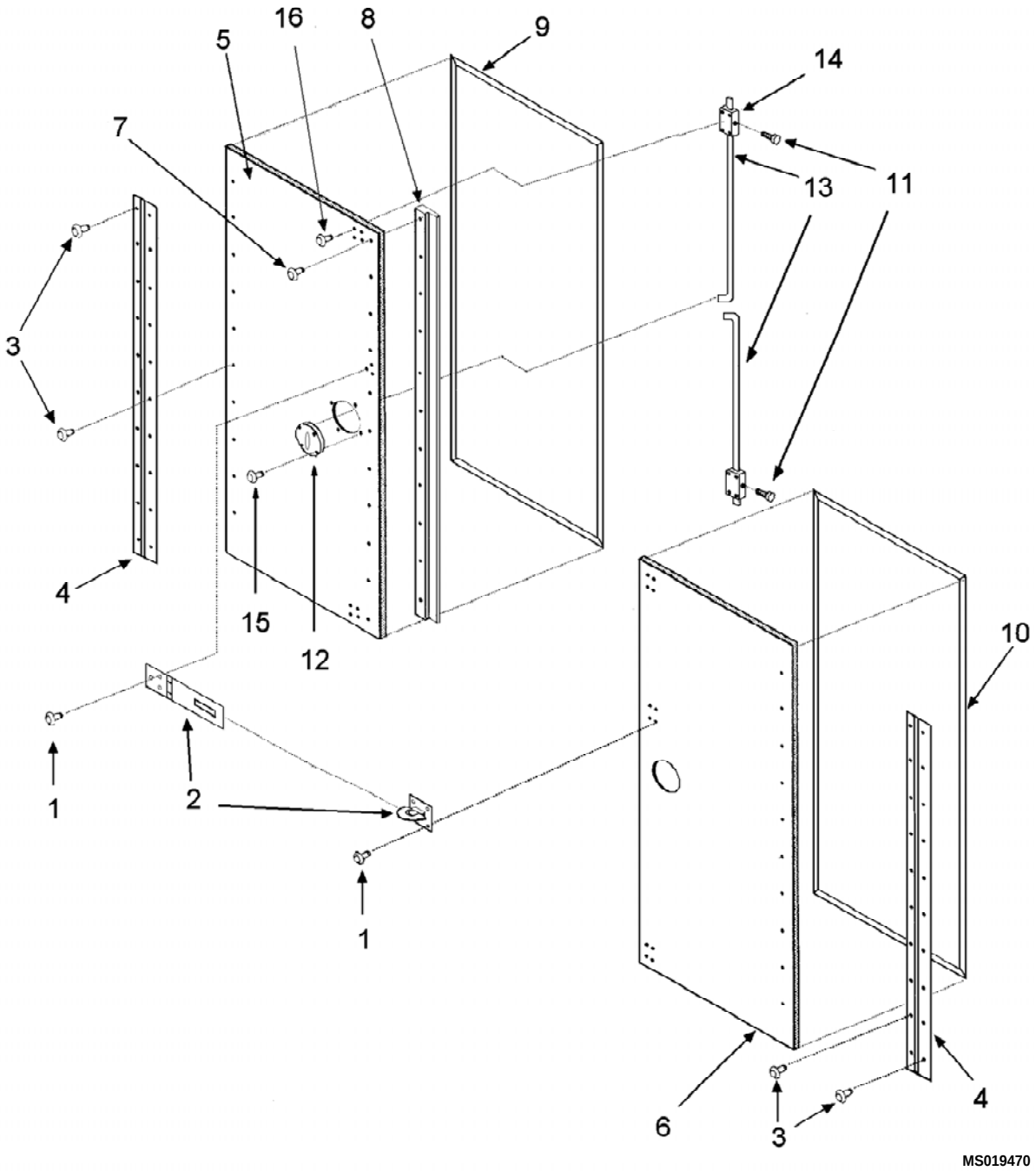

Figure 1. Back Door Assembly

REPAIR OR REPLACEMENT

Bonded Panel Repairs

NOTE

Core material in these panels is end core balsa, with a thickness of 0.250 in.

1. Bonded panel repairs will be completed in accordance with Chapter 9 of TM 1-1500-204-23-10. Material listing for repair supplies will be found in WP 0031 00.

Replacing Door Seal

1. Remove old door seal (9 or 10) from door (5 or 6).
2. Remove old adhesive, oxidation, dirt, and /or other contaminates from door seal area.
3. Rough sand door seal seat area with 100 Grit Paper, (Item 6, WP 0031 00) or similar to prepare surface for adhesive.
4. Clean roughened area with acetone, (Item 1, WP 0031 00).
5. Apply Permabond Cyanoacrylate (Superglue) Adhesive, (Item 2, WP 0031 00) in a continuous bead on front, back, and edge of door seal seat area.
6. Place new seal on door and hold in place for approximately 3 to 5 minutes to allow adhesive to set.

TOUCH-UP PAINTING

WARNING

Chemical agent resistant coating (CARC) is extremely toxic and flammable. Never use where sparks, smoking or open flame may be present. CARC, if improperly used, may cause long term health problems. Avoid contact with skin, breathing of fumes, or ingestion of dried particles. Use must be monitored by local safety office and preventive medicine support activity. Refer to TM 43-0139 for applicable safety precautions prior to removal or application of CARC.

1. Prime surfaces with MIL-P-23377, Primer (Item 8, WP 0031 00) and paint with MIL-C-22750, Number 34094 (Green 383) (Item 9, WP 0031 00) in accordance with TM 43-0139.

ASSEMBLY

NOTE

The following steps should be performed on each door.

1. Attach 2 blocks (14) to top and bottom on insides of door (5 or 6) using 8 rivets (16).
2. Attach D-ring lock (12) to door (5 or 6) using 4 rivets (15).
3. Insert 2 rods (13) into inside of D-ring lock (12) and twist 1/4 turn locking rods in D-ring lock.
4. Turn D-ring lock handle (12) allowing rods (13) to be inserted into blocks (14).
5. Return D-ring lock handle (12) to resting position.
6. Tighten locking bolts (11) to secure rods (13).
7. Attach hinge (4) to door (5 or 6) using 10 rivets (3).
8. Attach door (5 or 6) to Main Box Assembly using 10 rivets (3) through hinge (4).
9. If door seal (9 or 10) has been removed, complete steps 2 through 6 in Replacing Door Seal above.
10. Attach hasp (2) on left door (5) with 3 rivets (1) and staple (2) on right door (6) with 4 rivets (1).
11. Attach doorstop (8) to left door (5) using 11 rivets (7).
12. Seal all outside joints, seams, bolts and rivet heads with Number 8802 extrudable sealant (Item 4, WP 0031 00).

End Of Work Package

SHOP EQUIPMENT CONTACT MAINTENANCE (SECM) OVERHEAD CARGO/MAINTENANCE RACK ASSEMBLY COMPONENTS

INITIAL SETUP

Tools and Special Tools:
Tool Kit Acft. Maint, B01 (Table 2, WP 0025 00)

Materials/Parts:
MIL-P-23377, Primer (Item 8, WP 0031 00)
MIL-C-22750, Number 34094 (Green 383) (Item 9, WP 0031 00)
Number 8802 extrudable sealant (Item 4, WP 0031 00)
Coating, Anti-Slip (Item 12, WP 0031 00)
Loctite, Sealing compound, blue (Item 10, WP 0031 00)
Loctite, Sealing compound, red (Item 11, WP 0031 00)
RTV, Sealing compound (Item 13, WP 0031 00)

Personnel required:
One MOS 67 series or MOS 68 series

References:
TM 43-0139
WP 0012 00 Removal of Major Components

Equipment Conditions:
SECM assembled (WP 0020 00)

DISASSEMBLY

NOTE

Only disassemble as far as necessary to get to the part to be replaced.

1. Fold vehicle side mirrors in, chock wheels and set brakes before work begins.
2. Remove all contents from the Overhead Cargo/Maintenance Rack Assembly.
3. Unlatch safety bars (1) and safety chains (2). (Figure 1)
4. Remove locking pin (3) from each handrail nest, extract handrails.
5. Descend ladder (4) to ground. Remove locking pins (5) from ladder (4).
6. Lift ladder (4) from slots.

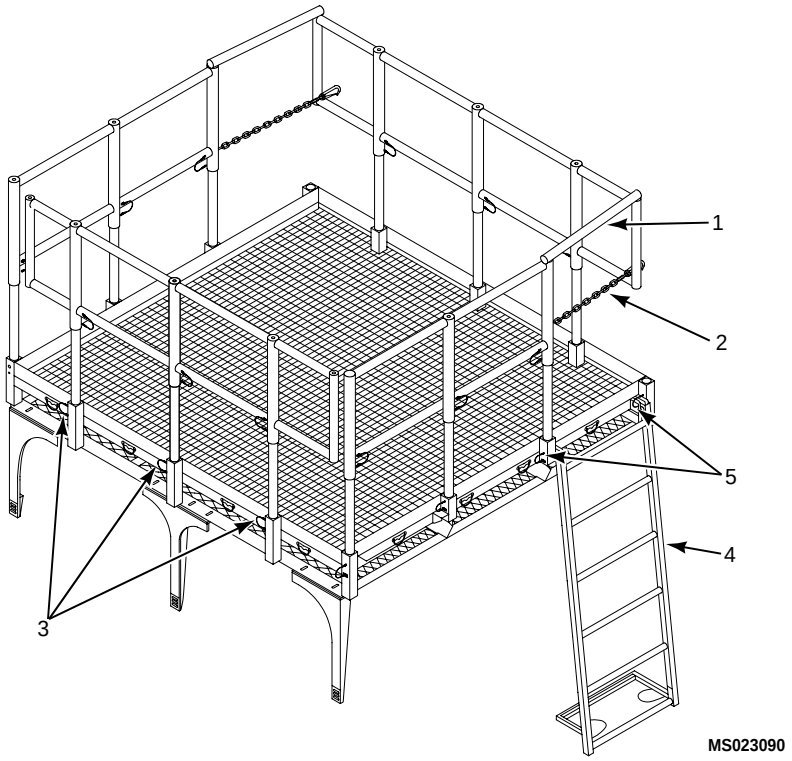

Figure 1. Removing Handrail Assemblies and Ladder

REPAIR OR REPLACEMENT

Locking Pin Assembly Replacement

1. Remove locking pin (1) from handrail (2).
2. Remove/install screw (3) to replace assembly. (Figure 2)

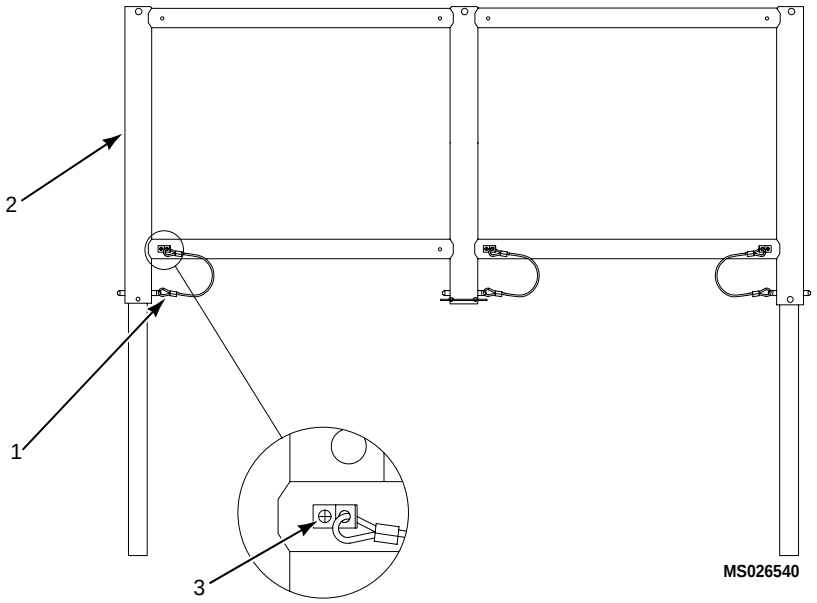

Figure 2. Locking Pin Assembly Replacement

Strapping Replacement - Remove/install rivet (1) to replace Velcro strap (2) or web strap (3). (Figure 3)

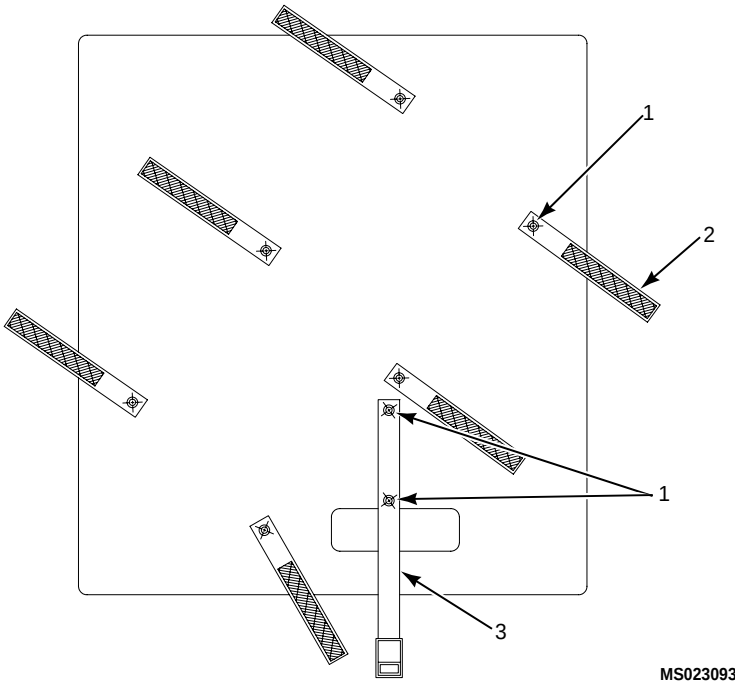

Figure 3. Strapping Replacement

NOTE

Apply Loctite sealing compound to all bolts before installation and apply RTV waterproofing compound around all bolt holes on main box assembly.

Rear Angle Support Replacement

Removal

1. Remove Overhead Cargo/Maintenance Rack Assembly according to WP 0012 00.
2. Remove 2 outer bolts (1), lock washers (2) and flat washers (3) from the angle support bracket (4). (Figure 4)

Installation

1. Connect the replacement angle support bracket (4) with 2 bolts (1), lock washers (2) and flat washers (3).

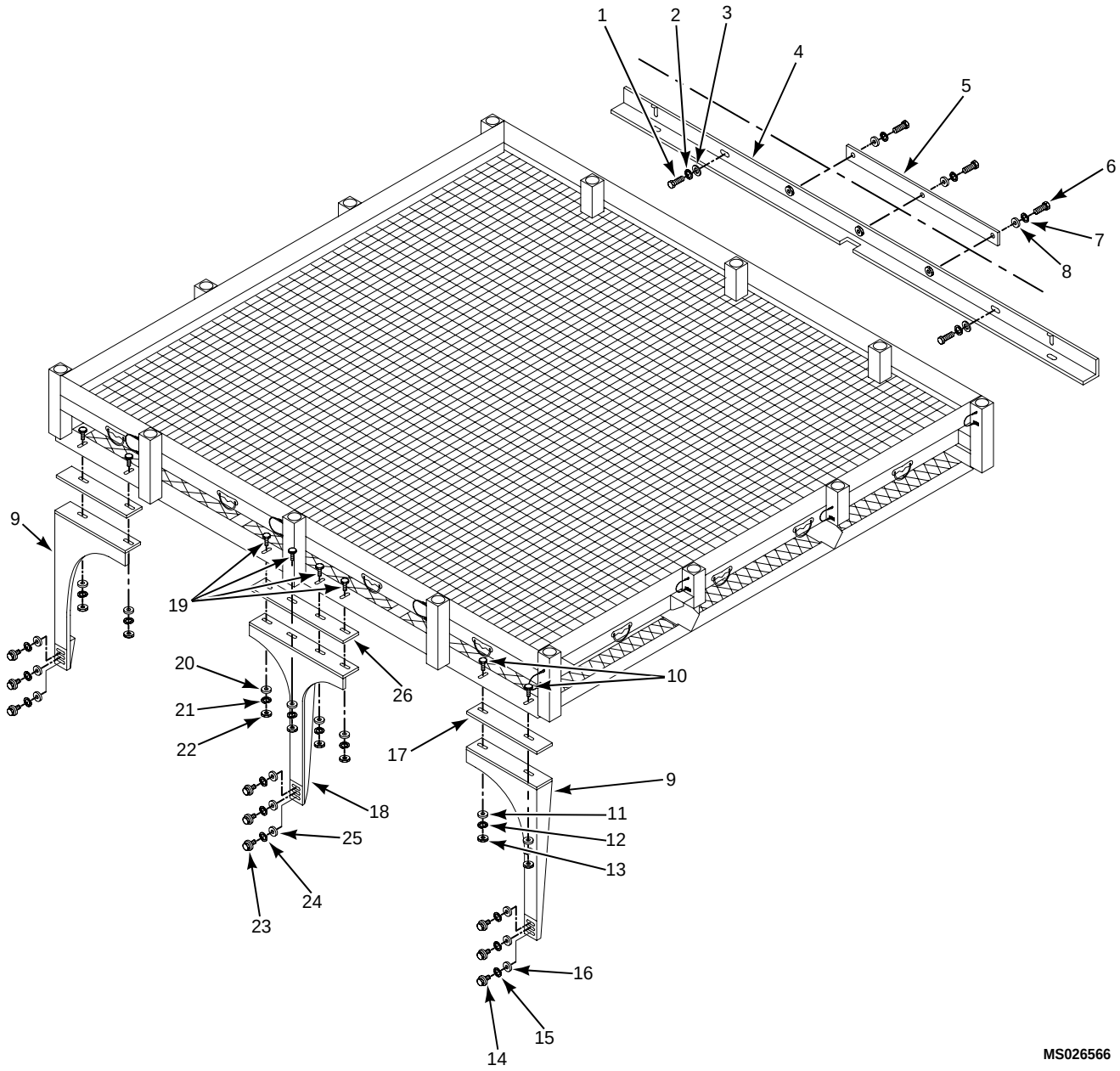

Figure 4. Rear Angle Bracket, Inner Bracket and Front Support Replacement

Inner Bracket Replacement

1. Remove all contents from the Overhead Cargo/Maintenance Rack Assembly.
2. Remove the inner bracket (5) by removing 3 bolts (6), lock washers (7) and flat washers (8) from inside the Main Box. (Figure 4)
3. Install the replacement by installing 3 bolts (6), lock washers (7) and flat washers (8) from the inside of the Main Box through the inner bracket.

Front Support (outer) Replacement

Removal

CAUTION

Replace front supports one at a time. The side of the rack being worked on should be manually supported.

1. Remove all contents from the Overhead Cargo/Maintenance Rack Assembly.
2. Remove outer front support (9) by removing 2 bolts (10), flat washers (11), lock washers (12) and nuts (13). (Figure 4)
3. Remove 3 bolts (14), lock washers (15) and flat washers (16) from windshield hinge.
4. Remove installed shim(s) (17).

Installation

1. Install 3 bolts (14), lock washers (15) and flat washers (16) through front support (9) to windshield hinge using additional flat washers between windshield and support as needed to ensure vertical alignment. (Figure 4)
2. Install 2 bolts (10), flat washers (11), lock washers (12) and nuts (13) through rack assembly slots and front support (9). Use shim(s) (17) as necessary to level rack assembly.

Front Support (center) Replacement

Removal

1. Remove all contents from the Overhead Cargo/Maintenance Rack Assembly.
2. Remove center front support (18) by removing 4 bolts (19), flat washers (20), lock washers (21) and nuts (22) connecting support to rack assembly frame. (Figure 4)
3. Remove 3 bolts (23), lock washers (24) and flat washers (25) from windshield hinge.
4. Remove installed shims (26).

Installation

1. Install 3 bolts (23), lock washers (24) and flat washers (25) to windshield hinge using additional flat washers between windshield and support as needed to ensure vertical alignment. (Figure 4)
2. Install 4 bolts (19), flat washers (20), lock washers (21) and nuts (22) through rack assembly slots and front support (18). Use shim(s) (26) as necessary to level rack assembly.

Front Support Shim Replacement – Remove/install center or outer front support using above procedures, as appropriate, for shim replacement.

Mirror Bracket Replacement

1. Remove top mounting bolts from mirror frame assembly.
2. Fold top of mirror assembly out of way.
3. Replace mirror bracket.
4. Install mounting bolts in mirror frame assembly.

Handrail Extension Nylon Bushing Replacement

1. With handrails removed from Overhead Cargo/Maintenance Rack Assembly, remove and discard two rivets (1). (Figure 5)
2. Remove cap (2) and set aside.
3. Pull out locking pin (3) and remove extension (4) by pushing upwards through the handrail assembly (5).
4. Remove nylon bushing (6) from extension by submersing briefly in hot water (1 minute) and sliding off or remove by cutting.
5. Install new nylon bushing (6) onto extension and slide it all the way to the top of the extension. If bushing is too tight, submerse in hot water for 30 seconds before installing.
6. Insert extension down into top of handrail assembly (5).
7. Install locking pin (3).
8. Install cap (2) and secure with two new rivets (1).

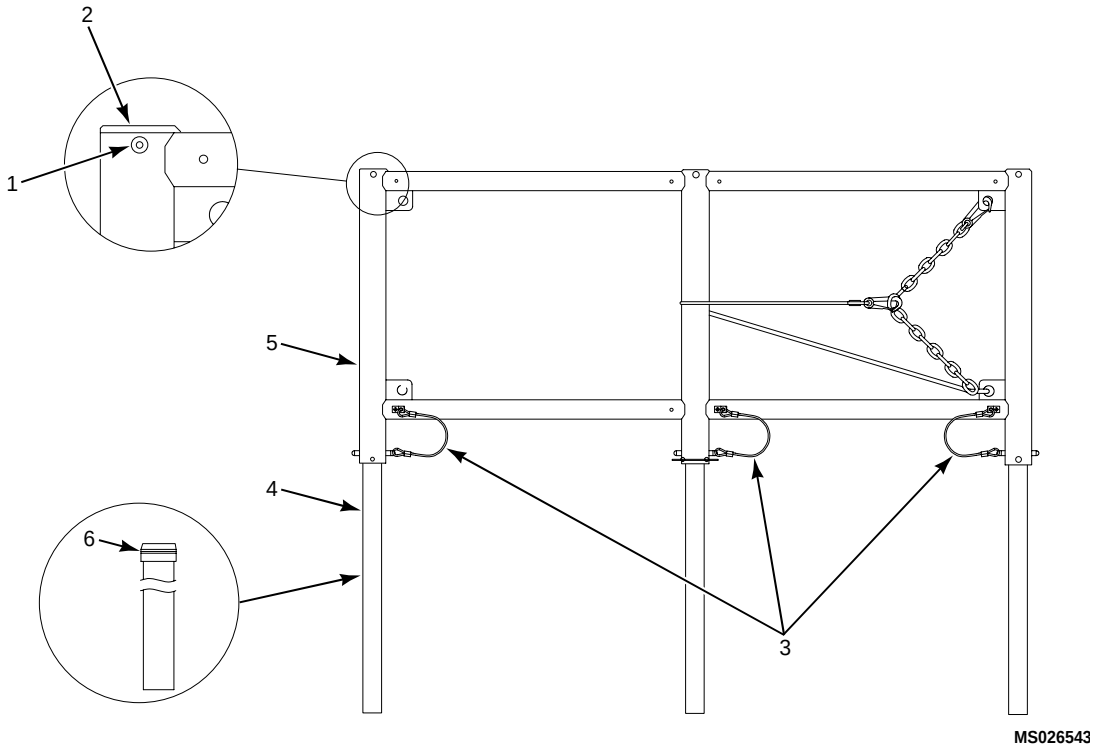

Figure 5. Handrail Extension Nylon Bushing Replacement

Touch-Up Painting

WARNING

Chemical agent resistant coating (CARC) is extremely toxic and flammable. Never use where sparks, smoking or open flame may be present. CARC, if improperly used, may cause long term health problems. Avoid contact with skin, breathing of fumes, or ingestion of dried particles. Use must be monitored by local safety office and preventive medicine support activity. Refer to TM 43-0139 for applicable safety precautions prior to removal or application of CARC.

Prime surfaces with MIL-P-23377, Primer (Item 8, WP 0031 00) and paint with MIL-C-22750, Number 34094 (Green 383) (Item 9, WP 0031 00) in accordance with TM 43-0139.

Use Coating, Anti-Slip (Item 12, WP 0031 00) on ladder steps.

ASSEMBLY

1. Chock wheels and set brakes before work begins.
2. Remove ladder (4) from rear storage compartment and insert hooks in Overhead Cargo/Maintenance Rack Assembly. (Figure 1)
3. Remove locking pins (5) to lower stabilizer bar (6) toward vehicle. Install locking pins (5). (Figure 1)
4. Remove handrail assemblies from forward storage compartment and extend all vertical handrail extensions. Secure with locking pins (3).
5. Ascend ladder to Overhead Cargo/Maintenance Rack Assembly. Install extended handrail assemblies into appropriate handrail nests, beginning with center extension first and then the outer two extensions. Secure in the nests with locking pins.
6. Remove the safety assemblies from the roadside middle storage area and attach the safety chains and bars to each side handrail assembly. Stow the bungee cords.
7. Latch safety bars (1) and safety chains (2). (Figure 1)

End Of Work Package

SHOP EQUIPMENT CONTACT MAINTENANCE (SECM)
SIDE BOX LEFT HAND COMPONENT

INITIAL SETUP

Tools and Special Tools:
Tool Kit Acft. Maint, B01 (Table 2, WP 0025 00)

Materials/Parts:
100 grit paper, (Item 6, WP 0031 00)
Acetone, (Item 1, WP 0031 00)
Permabond Cyanoacrylate (Superglue) Adhesive, (Item 2, WP 0031 00)
MIL-P-23377, Primer (Item 8, WP 0031 00)
MIL-C-22750, Number 34094 (Green 383) (Item 9, WP 0031 00)
Number 8802 extrudable sealant (Item 4, WP 0031 00)

Personnel Required:
One MOS 67 Series or MOS 68 Series

References:
TM 1-1500-204-23-10
Repair Parts and Special Tools List (WP 0027 00)

Equipment Conditions:
Side Box Removed From HMMWV (WP 0012 00)

DISASSEMBLY

1. Remove 14 rivets (1) and hinge (2). (Figure 1)
2. Remove 8 bolts (3), 8 nuts (4), 8 lock washers (5), 2 door stays (6) and door (7).
3. Remove 7 rivets (8) and hasp and staple (9).
4. Remove two shelves (10) from box. Remove 8 rivets (11) and 4 shelf brackets (12) from shelves (10).
5. Remove 4 bolts (13), 4 nuts (14), 8 lock washers (15), 4 flat washers (16), 4 rivets (17) and fuel can plate (18).
6. Remove 14 rivets (19) and 2 latches (20).
7. Remove rivet (21), lanyard (22) and locking pin (23).
8. Remove 10 rivets (24) and 2 handles (25), with 2 backing plates (26).
9. Remove door seal (27).

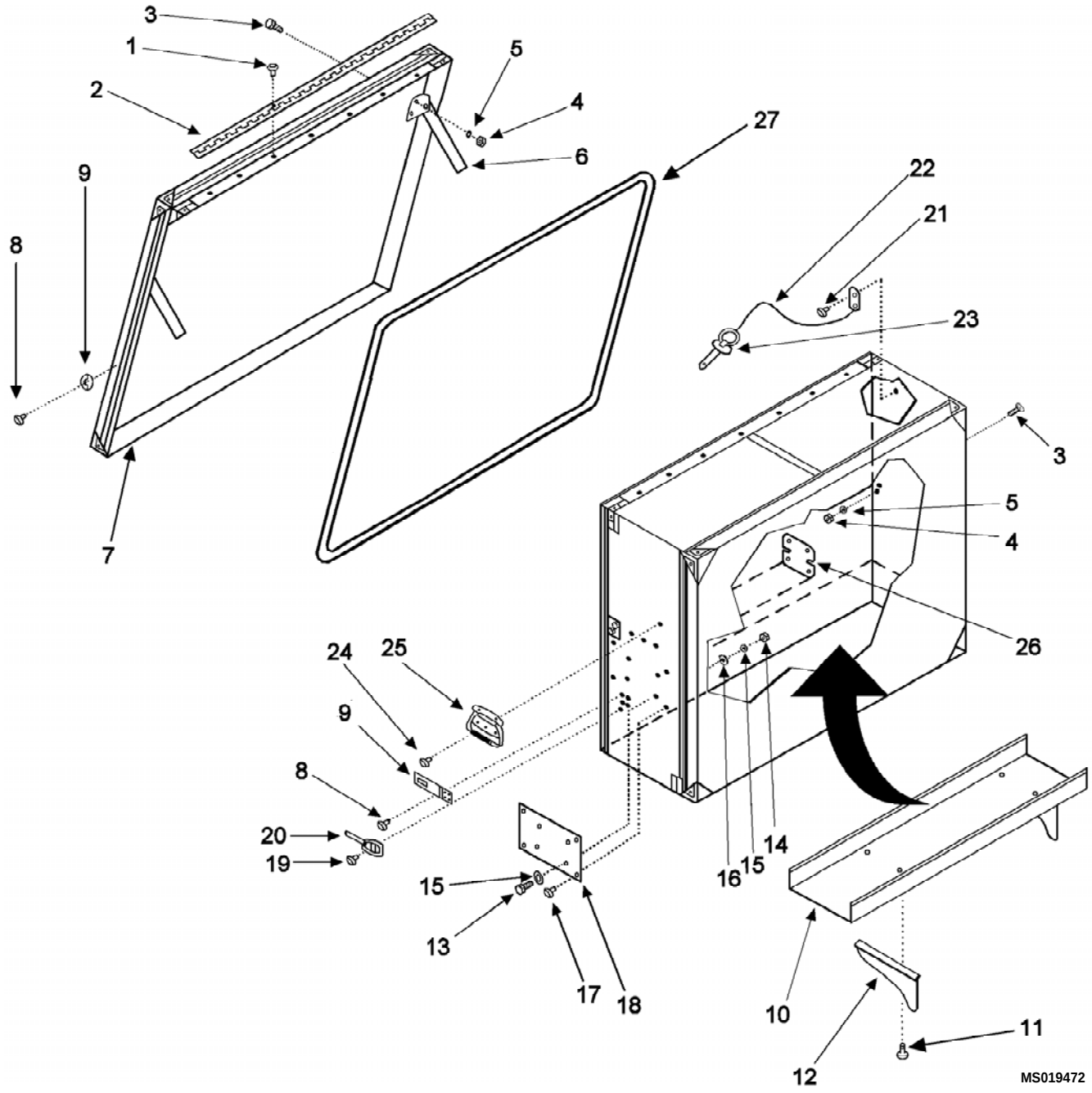

Figure 1. Left Side Box Assembly

REPAIR OR REPLACEMENT

Bonded Panel Repairs

NOTE

Core material in these panels is end core balsa, with a thickness of 0.250 in.

1. Bonded panel repairs will be completed in accordance with Chapter 9 of TM 1-1500-204-23-10. Material listing for repair supplies will be found in WP 0031 00.

Replacing Door Seal

1. Remove old door seal (27) from door (7).
2. Remove old adhesive, oxidation, dirt, and /or other contaminates from door seal area.
3. Rough sand door seal seat area with 100 Grit Paper, (Item 6, WP 0031 00), or similar, to prepare surface for adhesive.
4. Clean roughened area with acetone, (Item 1, WP 0031 00).
5. Apply Permabond Cyanoacrylate (Superglue) Adhesive, (Item 2, WP 0031 00) in a continuous bead on front, back, and edge of door seal seat area.
6. Place new seal on door and hold in place for approximately 3 to 5 minutes to allow adhesive to set.

TOUCH-UP PAINTING

WARNING

Chemical agent resistant coating (CARC) is extremely toxic and flammable. Never use where sparks, smoking or open flame may be present. CARC, if improperly used, may cause long term health problems. Avoid contact with skin, breathing of fumes, or ingestion of dried particles. Use must be monitored by local safety office and preventive medicine support activity. Refer to TM 43-0139 for applicable safety precautions prior to removal or application of CARC.

1. Prime surfaces with MIL-P-23377, Primer (Item 8, WP 0031 00) and paint with MIL-C-22750, Number 34094 (Green 383) (Item 9, WP 0031 00) in accordance with TM 43-0139.

ASSEMBLY

1. Attach 2 handles (25) with 10 rivets (24) through the handle, box and 2 backing plates (26).
2. Attach 2 lanyards (22) and 2 locking pins (23) using 2 rivets (21).
3. Attach 2 latches (20) with 14 rivets (19).
4. Attach fuel can plate (18) with 4 rivets (17) at outside corners of fuel can plate.
5. Attach 4 bolts (13), 8 lock washers (15), 4 flat washers (16) and 4 nuts (14) to fuel can plate (18).
6. Attach 4 shelf brackets (12) to 2 shelves (10) using 8 rivets (11).
7. Attach hasp and staple (9) using 7 rivets (8).
8. Attach door seal (27) to door by following steps 2-6 in Replacing Door Seal above.
9. Attach hinge (2) to door using 7 rivets (1).
10. Attach door (7) to box at hinge (2) using 7 rivets (1).

11. Attach 2 door stays (6) to connecting box and door (7) using 8 bolts (3), 8 nuts (4) and 8 lock washers (5).
12. Seal all outside joints, seams, bolts and rivet heads with Number 8802 extrudable sealant (Item 4, WP 0031 00).

End Of Work Package

SHOP EQUIPMENT CONTACT MAINTENANCE (SECM) SIDE BOX RIGHT HAND COMPONENT

INITIAL SETUP

Tools and Special Tools:
Tool Kit Acft. Maint, B01 (Table 2, WP 0025 00)

Materials/Parts:
100 grit paper, (Item 6, WP 0031 00)
Acetone, (Item 1, WP 0031 00)
Permabond Cyanoacrylate (Superglue) Adhesive, (Item 2, WP 0031 00)
MIL-P-23377, Primer (Item 8, WP 0031 00)
MIL-C-22750, Number 34094 (Green 383) (Item 9, WP 0031 00)
Number 8802 extrudable sealant (Item 4, WP 0031 00)

Personnel Required:
One MOS 67 Series or MOS 68 Series

References:
TM 1-1500-204-23-10
Repair Parts and Special Tools List (WP 0027 00)

Equipment Conditions:
SECM Assembled (WP 0020 00)

DISASSEMBLY

1. Remove 14 rivets (1) and hinge (2). (Figure 1)
2. Remove 8 bolts (3), 8 nuts (4), 8 lock washers (5), 2 door stays (6) and door (7).
3. Remove 7 rivets (8) and hasp and staple (9).
4. Remove two shelves from box. Remove 8 rivets (10) and 4 shelf brackets (11) from two shelves (12).
5. Remove 14 rivets (13) and 2 latches (14).
6. Remove rivet (15), lanyard (16) and locking pin (17).
7. Remove 10 rivets (18) and 2 handles (19), with 2 backing plates (20).
8. Remove door seal (21).

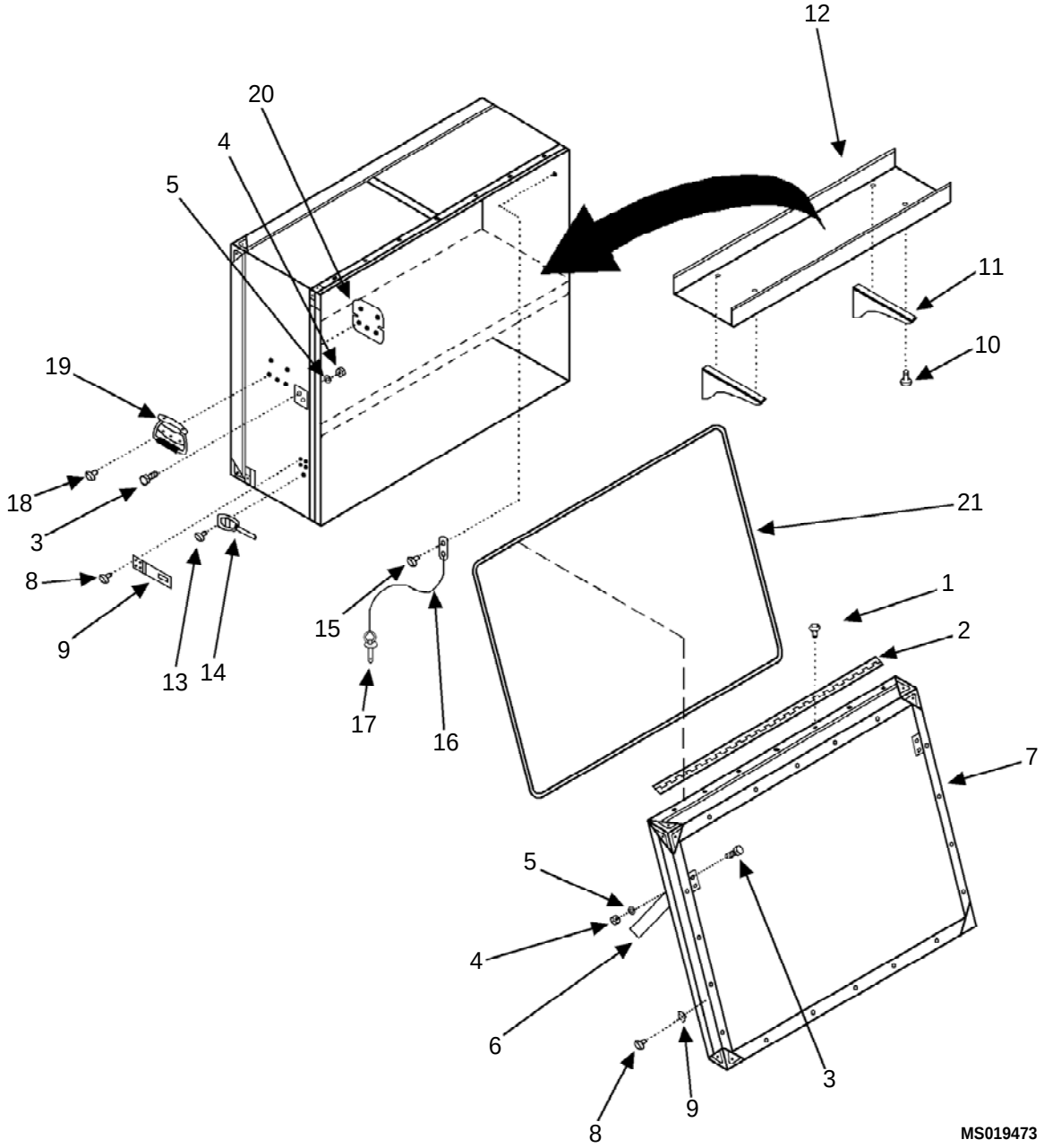

Figure 1. Assembly Side Box Right Hand

REPAIR OR REPLACEMENT

Bonded Panel Repairs

NOTE

Core material in these panels is end core balsa, with a thickness of 0.250 in.

1. Bonded panel repairs will be completed in accordance with Chapter 9 of TM 1-1500-204-23-10. Material listing for repair supplies will be found in WP 0031 00.

Replacing Door Seal

1. Remove old door seal (20) from door.
2. Remove old adhesive, oxidation, dirt, and /or other contaminates from door seal area.
3. Rough sand door seal seat area with 100 Grit Paper, (Item 6, WP 0031 00), or similar, to prepare surface for adhesive.
4. Clean roughened area with acetone, (Item 1, WP 0031 00).
5. Apply Permabond Cyanoacrylate (Superglue) Adhesive, (Item 2, WP 0031 00) in a continuous bead on front, back, and edge of door seal seat area.
6. Place new seal on door and hold in place for approximately 3 to 5 minutes to allow adhesive to set.

Touch-Up Painting

WARNING

Chemical agent resistant coating (CARC) is extremely toxic and flammable. Never use where sparks, smoking or open flame may be present. CARC, if improperly used, may cause long term health problems. Avoid contact with skin, breathing of fumes, or ingestion of dried particles. Use must be monitored by local safety office and preventive medicine support activity. Refer to TM 43-0139 for applicable safety precautions prior to removal or application of CARC.

1. Prime surfaces with MIL-P-23377, Primer (Item 8, WP 0031 00) and paint with MIL-C-22750, Number 34094 (Green 383) (Item 9, WP 0031 00) in accordance with TM 43-0139.

ASSEMBLY

1. Attach door seal (20) to door (7) by following steps 2-6 in Replacing Door Seal above.
2. Attach 2 handles (18) with 10 rivets (17) through the handle, box and 2 backing plates (19).
3. Attach lanyard (15) and locking pin (16) using 1 rivet (14).
4. Attach 2 latches (13) with 14 rivets (12).
5. Attach 4 shelf brackets (10) to 2 shelves (11) using 8 rivets (9).
6. Attach hasp and staple (8) using 7 rivets (7).
7. Attach 2 door stays (6) to door (7) using 4 bolts (3), 4 nuts (4) and 4 lock washers (5).
8. Attach hinge (2) to door using 7 rivets (1).
9. Attach door to box at hinge (2) using 7 rivets (1).
10. Attach 2 door stays (6) to box using 4 bolts (3), 4 nuts (4) and 4 lock washers (5).
11. Seal all outside joints, seams, bolts and rivet heads with Number 8802 extrudable sealant (Item 4, WP 0031 00).

End Of Work Package

SHOP EQUIPMENT CONTACT MAINTENANCE (SECM) ASSEMBLY OF MAJOR COMPONENTS

INITIAL SETUP

Tools and Special Tools:
Tool Kit Acft. Maint, B01 (Table 2, WP 0025 00)

References:
Service Upon Receipt (WP 0009 00)
Maintenance Allocation Chart (Table 1, WP 0025 00)
Repair Parts and Special Tools List (WP 0027 00)
TM 9-2320-280-10, TRUCK, UTILITY: HEAVY VARIANT, 4X4, M1097 (2320-01-346-9317) (EIC: BBM); M1097A1

Personnel Required:
Six MOS 67 Series or MOS 68 Series

Equipment Conditions:
SECM Removed From HMMWV

VEHICLE PREPARATION

1. Verify HMMWV is prepared to receive SECM according to WP 0009 00, Service Upon Receipt.
2. Chock wheels and set brakes.

INSTALLATION

1. Lay out and inventory SECM container components as listed in Table 1, WP 0030 00.
2. Install new rear cab curtain loosely. (Figure 1) Do not tighten until main box is installed. Follow instructions contained in TM 9-2320-280-10.

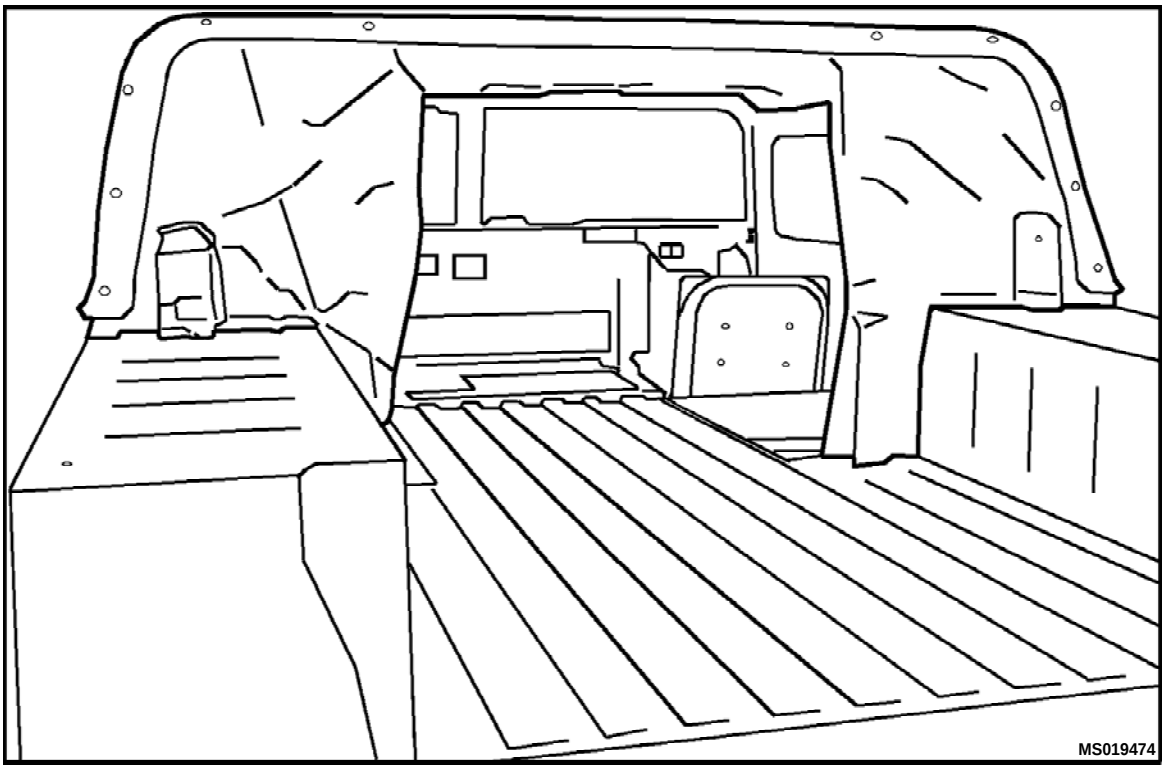

Figure 1. Rear Cab Curtain Installation

WARNING

Six people are required to lift and move Main Box Assembly. Empty Main Box of all contents.

NOTE

A forklift with at least 40-inch tines may also be used to lift Main Box Assembly.

3. Using lifting handles, pick up and place main box in HMMWV cargo bed. (Figure 2).

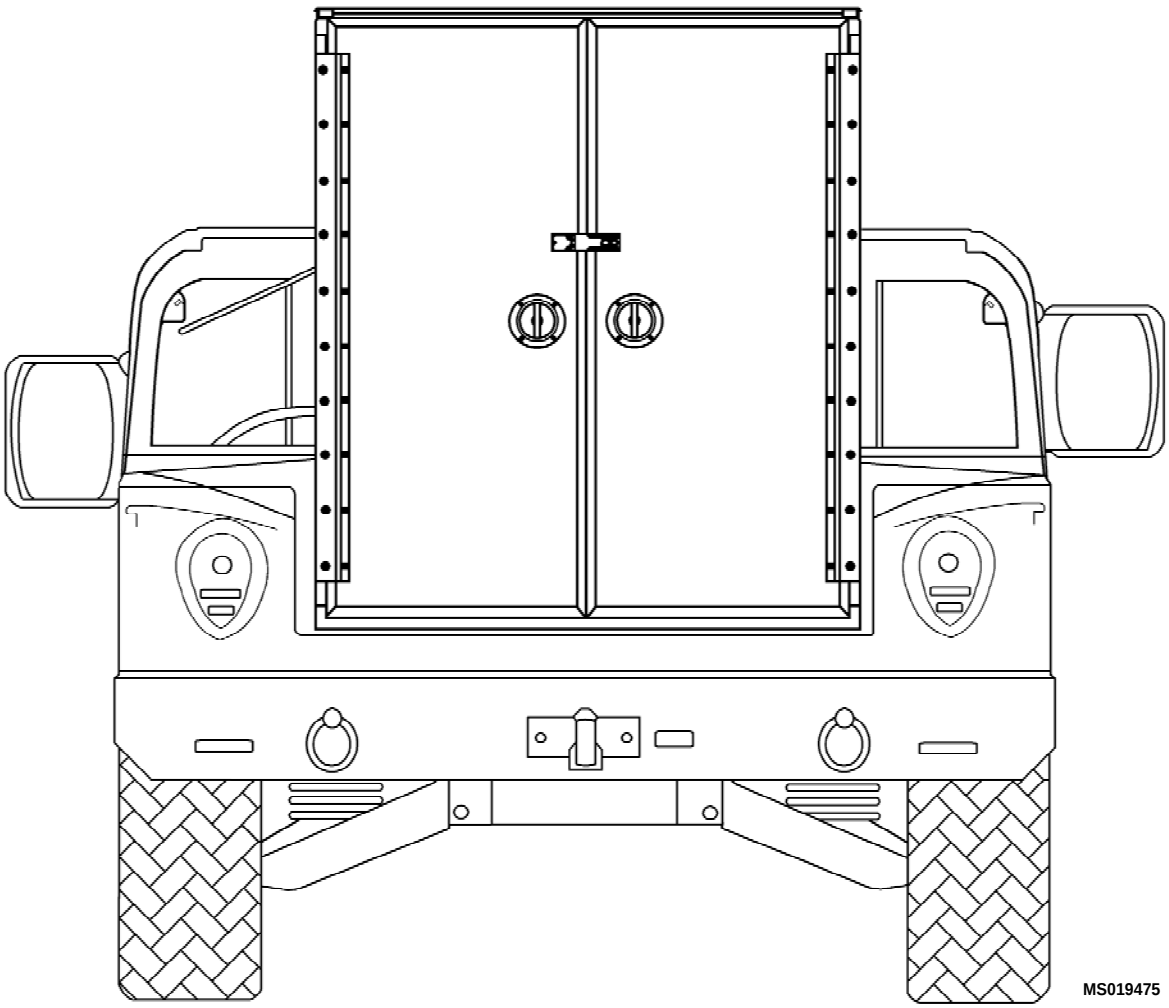

Figure 2. Main Box Installed

4. Bolt front of main box in place with two bolts (1), two lock washers (2), two flat washers (3), and two spacers (4). (Figure 3) Reuse hex nuts from tie-down rings stored with the Organizational Maintenance during VEHICLE PREPARATION.

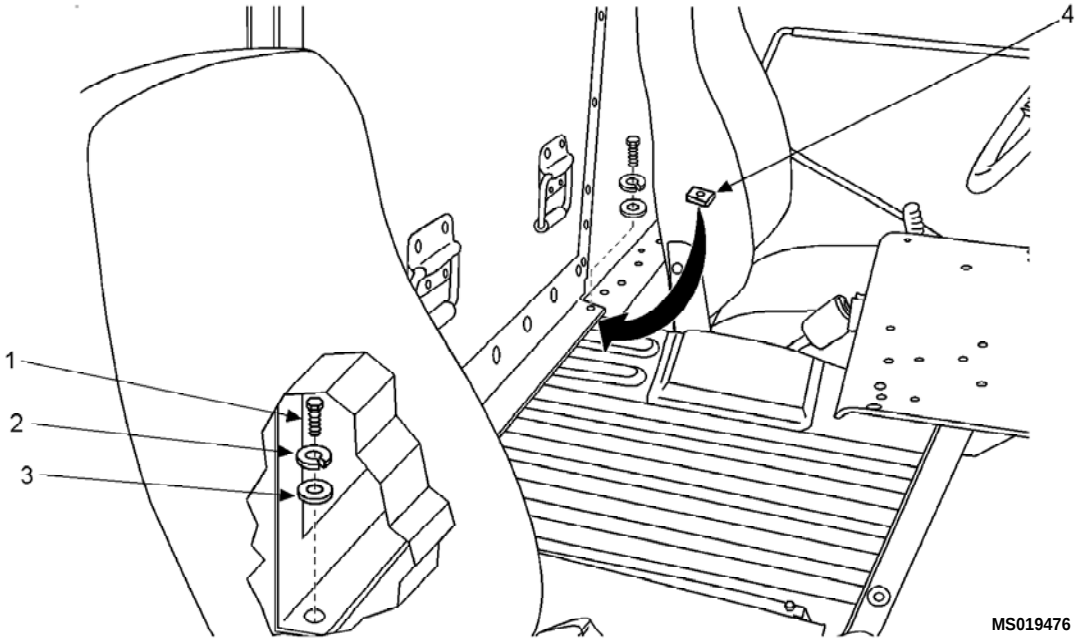

Figure 3. Front Attachment (Typical Two Places)

NOTE

If permanently attached threaded nut plates have been installed, they must be removed from HMMWV at the three rear most locations in order to install Main Box.

5. Bolt rear of main box in place with three 3/8-16 x 2 inch bolts (1), lock washers (2) and flat washers (3). Bolt locations are underneath vehicle. (Figure 4)

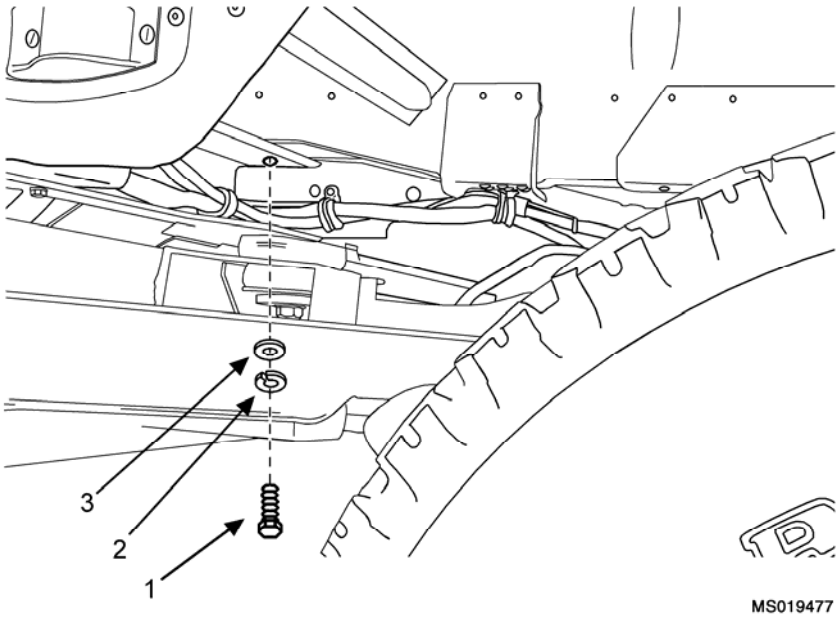

Figure 4. Rear Attachment (Typical Three Places)

NOTE

Left side box is equipped with a fuel can mounting plate.

6. Position left and right side boxes (1) on side box pads (2) on top of wheel wells of HMMWV. (Figure 5)

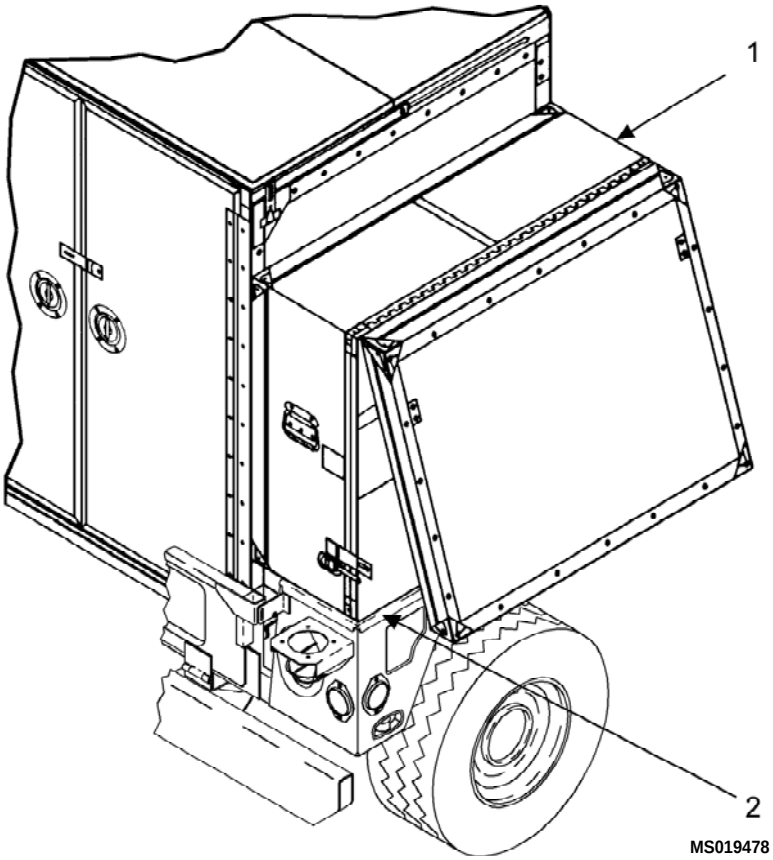

Figure 5. Side Box Positioning

NOTE

Tighten nut side only, turning bolt will strip rubber sealing washers.

7. Attach sidebox (1) in place using 4 bolts (2) and 4 lock washers (3) inside main box; 4 rubber washers (4) between main box and side box (1); and 4 curved backing plates (5), 4 flat washers (6) and 4 nuts (7) inside side box (1). (Figure 6)

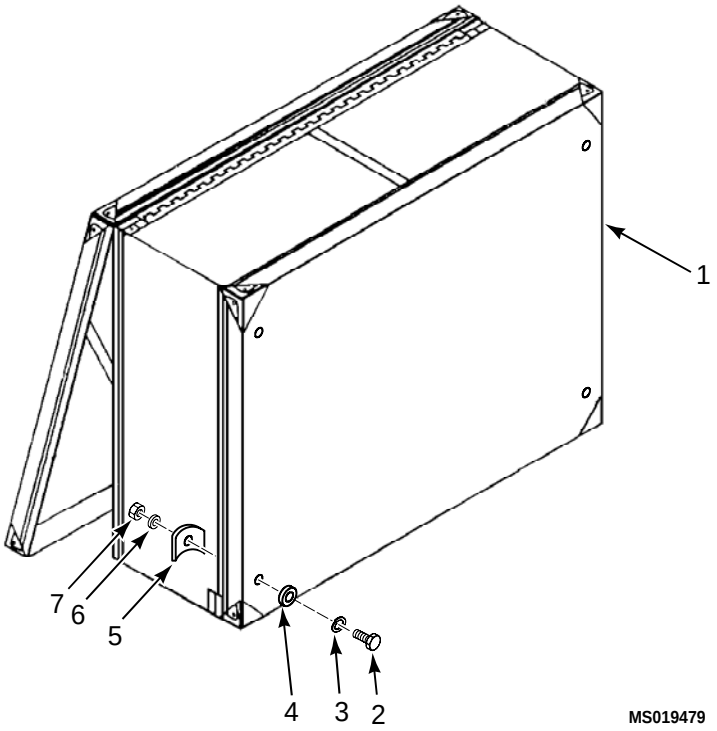

Figure 6. Installation of Side Boxes

8. Fold vehicle side mirrors in.
9. Remove all items from storage compartments of Overhead Cargo/Maintenance Rack Assembly. Position the assembly in front of the vehicle.

WARNING

At least four people are required to lift and handle the Overhead Rack Assembly. The assembly weighs approximately 218 pounds.

CAUTION

Overhead rack assembly should remain manually supported until all bolts have been installed and tightened.

10. Protect HMMWV roof canvas, lift and position the Overhead Rack Assembly on top of HMMWV. Ensure rear of Overhead Rack Assembly is positioned on the angle support (8) attached to the Main Box Assembly and the front of Overhead Rack Assembly is positioned on all three front supports (10, 11, 15). (Figure 7)

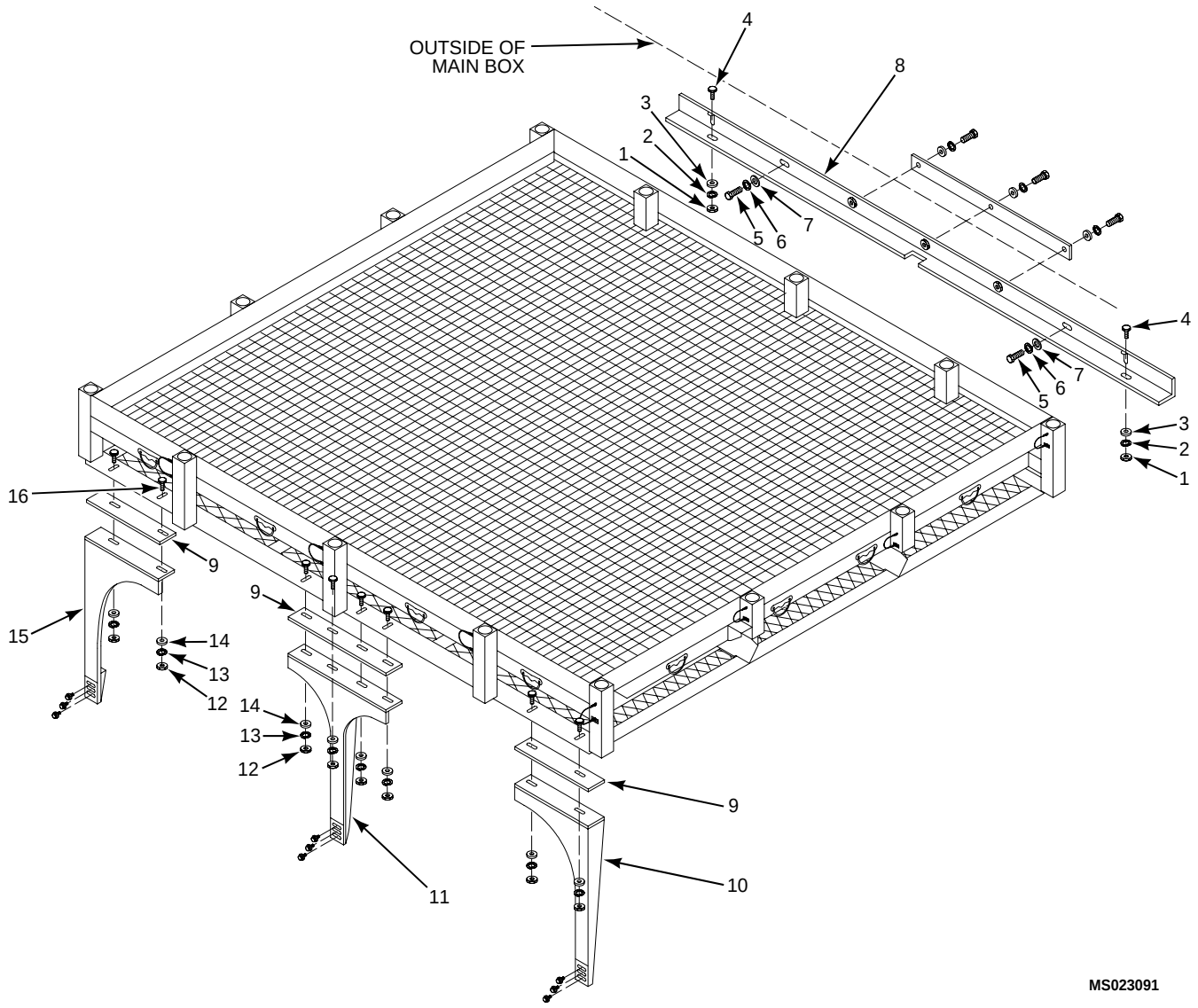

Figure 7. Overhead Cargo/Maintenance Rack Assembly Installation

NOTE

Apply Loctite sealing compound to all bolts during installation and apply RTV waterproofing compound around all bolt holes on Main Box Assembly.

11. Install two 3/8-inch bolts with lock washers and flat washers (5, 6, 7), in sequence, through Overhead Rack Assembly and Angle Support into existing tapped holes in Main Box Assembly. Do not tighten. (Figure 7)
12. Install two 3/8-inch bolts with lock washers, flat washers and nuts (4, 3, 2, 1), in sequence, through Angle Support and Overhead Rack Assembly. Do not tighten. (Figure 7)

13. Install eight 3/8-inch bolts with lock washers, flat washers and nuts (16, 14, 13, 12), in sequence, through front supports into Rack Assembly slots. Use shims (9) as necessary, to level Overhead Rack Assembly. Do not tighten. (Figure 7)

NOTE

The following alignment is accomplished using slotted holes in Overhead Rack Assembly.

14. Discontinue manual support and align Overhead Rack Assembly to vehicle.
15. Ensure that all bolts are hand tightened and then torque bolts as shown below:

    3/8 – 16 Dry 35 – 45 lbs/ft, Wet 25 – 35 lbs/ft

WARNING

Ladder is rated for a maximum of 300 pounds.

16. Insert ladder (3), hooks up, into slots in Overhead Rack Assembly. Ensure that stabilizer bar (5) is folded out toward vehicle. Install locking pins (4). (Figure 8)
17. Obtain each handrail assembly and extend all vertical handrail extensions. Secure with locking pins.
18. Insert extended handrail assemblies into appropriate handrail nests, beginning with center extension first and then outer two. Install locking pins in nests.
19. Attach safety chains (2) and safety bars (1) of each side rail assembly to appropriate handrail assembly. (Figure 8)
20. Return vehicle mirrors to original position.

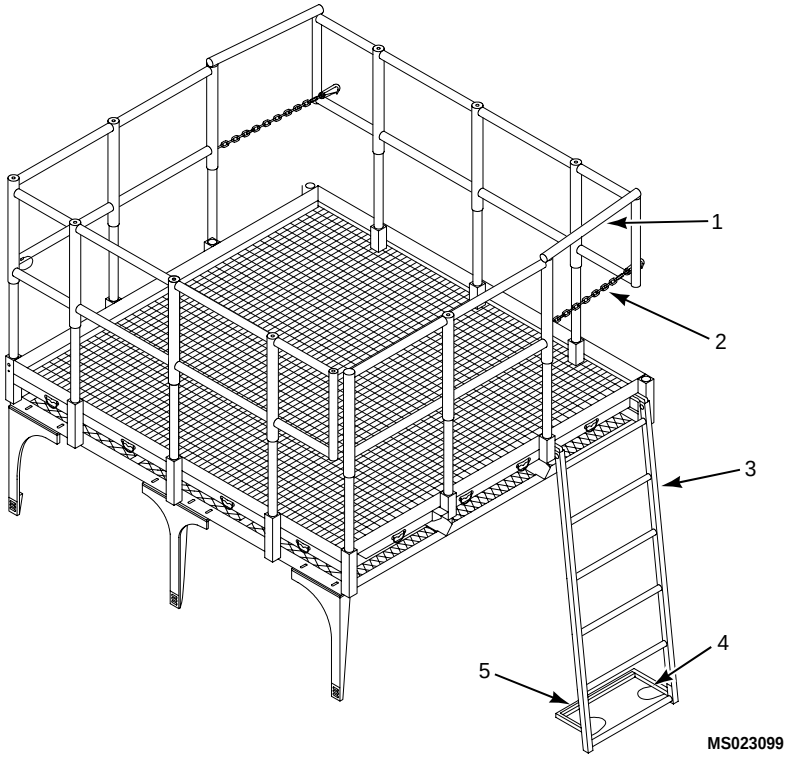

Figure 8. Installation of Ladder and Handrail Assemblies

End Of Work Package

SHOP EQUIPMENT CONTACT MAINTENANCE (SECM) PREPARATION FOR STORAGE AND SHIPMENT

INITIAL SETUP

References:
TM 9-2320-280-10, TRUCK, UTILITY: HEAVY VARIANT, 4X4, M1097 (2320-01-346-9317) (EIC: BBM); M1097A1

Equipment Conditions:
SECM Assembled (WP 0020 00)

Ship HMMWV with SECM installed to destination using guidelines in TM 9-2320-280-10.

End Of Work Package

SHOP EQUIPMENT CONTACT MAINTENANCE (SECM)
REPLACING REAR MOUNTING BAR

INITIAL SETUP

Tools And Special Tools:
Tool Kit Acft. Maint., B01 (Table 2, WP 0025 00)

Materials/Parts:
Mounting Bar P/N 50154-799 (Figure 4, Item 18, WP 0027 00)

Personnel Required:
One MOS 67 Series or MOS 68 Series

References:
Repair Parts and Special Tools List, WP 0027
TM 9-2320-280-10, TRUCK, UTILITY: HEAVY VARIANT, 4X4, M1097 (2320-01-346-9317) (EIC: BBM); M1097A1

Equipment Conditions:
Side boxes and Overhead Rack removed from HMMWV, WP 0012 00

Replacing Rear Mounting Bar

1. Remove or unfasten rear cab curtain from container.
2. Remove 3 mounting bolts (1), 3 lock washers (2) and 3 flat washers (3).
3. Remove 2 mounting bolts (4), 3 lock washers (5) and 3 flat washers (6) and spacer (7). (Figure 1)

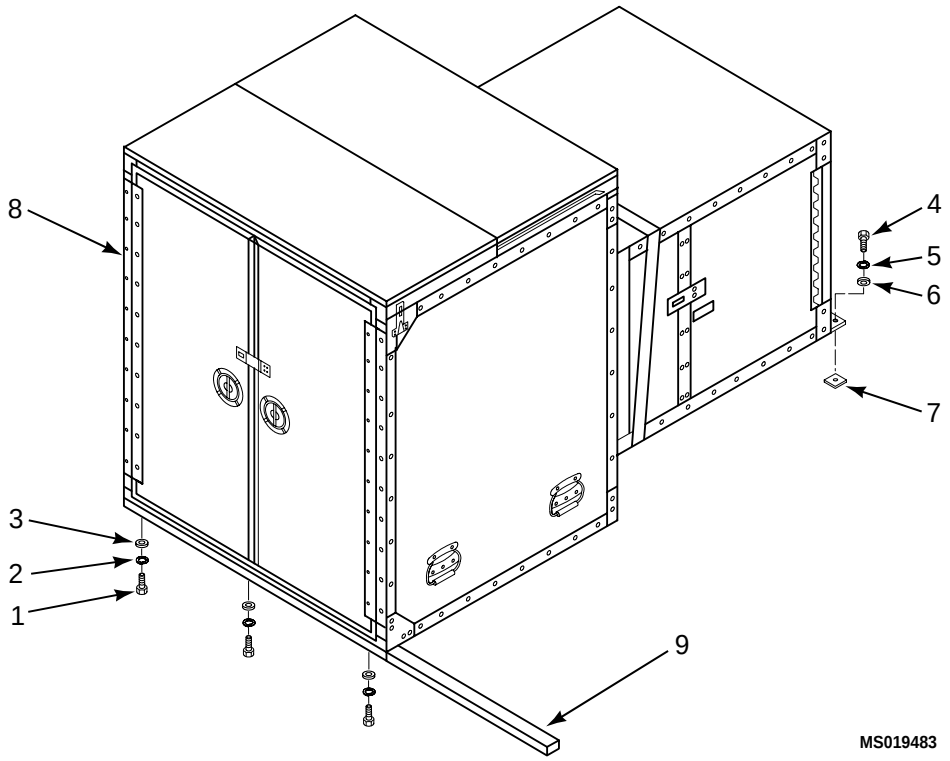

Figure 1. Rear Mounting Bar Replacement

WARNING

Six people are required to lift and move main box assembly.

NOTE

Contents must be removed from Main Box prior to disassembly.

4. Slide container (8) towards rear of vehicle and allow it to protrude enough to gain access to the mounting tube.
5. Replace mounting bar (9) by sliding old bar out and sliding new bar in.
6. Slide container back into vehicle and reinstall all mounting hardware (1 through 6) ensuring spacer (7) is placed between main box and HMMWV.
7. Re-Install rear cab curtain. Do not tighten until main box is installed. Follow instructions contained in TM 9-2320-280-10.

End Of Work Package

CHAPTER 5

SUPPORTING INFORMATION FOR SHOP EQUIPMENT CONTACT MAINTENANCE (SECM)

SHOP EQUIPMENT CONTACT MAINTENANCE (SECM) REFERENCES

SCOPE

This appendix lists all forms, technical manuals, and miscellaneous publications referenced in this manual.

FORMS

DA Form 2028 ..... Recommended Changes to Publications and Blank Forms

SF 368 ..... Product Quality Deficiency Report

LOGISTICS AND STORAGE

TM 743-200-1 ..... Storage and Materials Handling

MAINTENANCE OF SUPPLIES AND EQUIPMENT

AR 710-2 ..... Supply Policy Below the Wholesale Level

AR 735-11-2 ..... Reporting Of Supply Discrepancies

AR 750-1 ..... Army Material Maintenance Concepts and Policies

DA PAM 710-2-2 ..... Supply Support Activity System Manual Procedures

DA PAM 738-751 ..... Functional User's Manual for the Army Maintenance Management System-Aviation (TAMMS-A)

TM 43-0139 ..... Painting Operations Instructions for Field Use

TM 9-2320-280-10 ..... Truck, Utility: Heavy Variant, 4x4, M1097 (2320-01-346-9317) (EIC: BBM); M1097A2

OTHER PUBLICATIONS

CTA 8-100 ..... Army Medical Department Expendable/Durable Items

CTA 50-970 ..... Expendable/Durable Items (Except Medical, Class V Repair Parts, and Heraldic Items

FM 55-450-Series ..... Multi Service Helicopter External Air Transport

TM 1-1500-204-23 ..... Series (1-10) General Aircraft Maintenance Manual

TM 750-244-1-4 ..... Procedures for the Destruction of Aviation Ground Support Equipment (FSC 4940) to Prevent Enemy Use

SHOP EQUIPMENT CONTACT MAINTENANCE (SECM) MAINTENANCE ALLOCATION CHART (MAC) INTRODUCTION

AVIATION MAINTENANCE ALLOCATION CHART

This MAC assigns maintenance functions in accordance with the Aviation Maintenance concept for Army aviation. These maintenance levels - Aviation Unit Maintenance (AVUM), Aviation Intermediate Maintenance (AVIM), and depot maintenance - are depicted in the MAC as:

AVUM - corresponds to an "O" code in the Repair Parts and Special Tools List (RPSTL).

AVIM - corresponds to an "F" code in the RPSTL.

DEPOT - corresponds to a "D" code in the RPSTL.

The maintenance to be performed below depot and in the field is described as follows:

Aviation Unit Maintenance (AVUM).

AVUM activities will be staffed and equipped to perform high frequency "On- Aircraft" maintenance tasks required to retain or return aircraft systems to a serviceable condition. The maintenance capability of the AVUM will be governed by the Maintenance Allocation Chart (MAC) and limited by the amount and complexity of Ground Support Equipment (GSE), facilities required, authorized manning strength, and critical skills available. The range and quantity of authorized spare modules/components will be consistent with the mobility requirements dictated by the air mobility concept. (Assignments of maintenance tasks to divisional company size aviation units will consider the overall maintenance capability of the division, the requirement to conserve personnel and equipment resources, and air mobility requirements.)

1. Company Size Aviation Units. Perform those tasks which consist primarily of preventive maintenance and maintenance repair and replacement functions associated with sustaining a high level of aircraft operational readiness. Perform maintenance inspections and servicing to include preflight, daily, intermediate, periodic (or phased), and special inspections, as authorized by the MAC or higher headquarters. Identify the cause of equipment/system malfunctions using applicable technical manual troubleshooting instructions, Built-In Test Equipment (BITE), installed aircraft instruments, or Test, Measurement, and Diagnostic Equipment (TMDE). Replace worn or damaged modules/components that do not require complex adjustments or system alignment and which can be removed/installed with available skills, tools, and ground support equipment. Perform operational and continuity checks and make minor repairs to the electrical system. Inspect, service, and make operational, capacity, and pressure checks to hydraulic systems. Perform servicing, functional adjustments, and minor repair/replacement to the flight control, propulsion, power train, and fuel systems. Accomplish airframe repair that does not require extensive disassembly, jigging, or alignment. The manufacture of airframe parts will be limited to those items which can be fabricated with tools and equipment found in current air mobile tool and shop sets. Evacuate unserviceable modules/components and end items beyond the repair capability of AVUM to the support AVIM.
2. Less than Company Size Aviation Units. Aviation elements organic to brigade, group, battalion headquarters, and detachment size units are normally small and have less than 10 aircraft assigned. Maintenance tasks performed by these units will be those which can be accomplished by the aircraft crew chief or assigned aircraft repairman and will normally be limited to preventive maintenance, inspections, servicing, spot painting, module/component fault diagnosis, and replacement of selected modules/components. Repair functions will normally be accomplished by the support AVIM unit.

Aviation Intermediate Maintenance (AVIM).

1. Provides mobile, responsive "one-stop" maintenance support. (Maintenance functions which are not conducive to sustaining air mobility will be assigned to depot maintenance.)

2. May perform all maintenance functions authorized to be done at AVUM. Repair of equipment for return to user will emphasize support of operational readiness requirements. Authorized maintenance includes replacement and repair of modules/components and end items which can be accomplished efficiently with available skills, tools, and equipment.
3. Establishes the Direct Exchange (DX) program for AVUM units by repairing selected items for return to stock when such repairs cannot be accomplished at the AVUM level.
4. Inspects, troubleshoots, performs diagnostic tests, repairs, adjusts, calibrates, and aligns aircraft system modules/components. AVIM units will have capability to determine the serviceability of specified modules/components removed prior to the expiration of the Time Between Overhaul (TBO) or finite life. Module/component disassembly and repair will support the DX program and will normally be limited to tasks requiring cleaning and the replacement of seals, fittings, and items of common hardware. Airframe repair and fabrication of parts will be limited to those maintenance tasks which can be performed with available tools and test equipment. Unserviceable reparable modules/components and end items which are beyond the capability of AVIM to repair will be evacuated to depot maintenance.
5. Performs aircraft weight and balance inspections and other special inspections which exceed AVUM capability.
6. Provides quick response maintenance support, including aircraft recovery and air evacuation, on-the-job training, and technical assistance through the use of mobile maintenance contact teams.
7. Maintains authorized operational readiness float aircraft.
8. Provides collection and classification services for serviceable/unserviceable materiel.
9. Operates a cannibalization activity in accordance with AR 710-2 (Supply Policy Below the Wholesale Level) and DA PAM 710-2-2 (Supply Support Activity System Manual Procedures). (The aircraft maintenance company within the maintenance battalion of a division will perform AVIM functions consistent with air mobility requirements and conservation of personnel and equipment resources. Additional intermediate maintenance support will be provided by the supporting nondivisional AVIM unit.)

USE OF THE MAC

NOTE

Approved item names are used throughout this MAC. Generic terms/nomenclature (if any) are expressed in parentheses and are not to be considered as official terminology.

This MAC assigns maintenance functions to the lowest level of maintenance, based on past experience and the following considerations:

Skills available.

Work time required.

Tools and test equipment required and/or available.

Only the lowest level of maintenance authorized to perform a maintenance function is indicated. If the lowest maintenance level cannot perform all tasks of any single maintenance function (e.g., test, repair), then the higher maintenance level(s) that can accomplish additional tasks will also be indicated.

A maintenance function assigned to a maintenance level will automatically be authorized to be performed at any higher maintenance level.

A maintenance function that cannot be performed at the assigned level of maintenance for any reason may be evacuated to the next higher maintenance level. Higher maintenance levels will perform the maintenance functions of lower maintenance levels when required by the commander who has the authority to direct such tasking.

The assignment of a maintenance function will not be construed as authorization to carry the related repair parts or spares in stock. Information to requisition or otherwise secure the necessary repair parts will be as specified in the associated RPSTL.

Normally there will be no deviation from the assigned level of maintenance. In cases of operational necessity, at the request of a lower maintenance level and on a one-time basis, transfer of maintenance functions to the lower level may be accomplished by specific authorization of the maintenance officer of the higher level of maintenance to which the function is assigned. The special tools, equipment, etc., required by the lower level of maintenance to perform this function will be furnished by the maintenance level to which the function is assigned. This transfer of a maintenance function to a lower maintenance level does not relieve the higher maintenance level of the responsibility for the function. The higher level of maintenance will provide technical supervision and inspection of the function being performed at the lower level.

MAINTENANCE FUNCTIONS

Maintenance functions will be limited to and defined as follows:

1. **Inspect**. To determine the serviceability of an item by comparing its physical, mechanical, and/or electrical characteristics with established standards through examination (e.g., by sight, sound, or feel).
2. **Test**. To verify serviceability by measuring the mechanical, pneumatic, hydraulic, or electrical characteristics of an item and comparing those characteristics with prescribed standards.
3. **Service**. Operations required periodically to keep an item in proper operating condition, i.e., to clean (includes decontaminate, when required), to preserve, to drain, to paint, or to replenish fuel, lubricants, chemical fluids, or gases.
4. **Adjust**. To maintain or regulate, within prescribed limits, by bringing into proper or exact position, or by setting the operating characteristics to specified parameters.
5. **Align**. To adjust specified variable elements of an item to bring about optimum or desired performance.
6. **Calibrate**. To determine and cause corrections to be made or to be adjusted on instruments of test, measuring, and diagnostic equipments used in precision measurement. Consists of comparisons of two instruments, one of which is a certified standard of known accuracy, to detect and adjust any discrepancy in the accuracy of the instrument being compared.
7. **Remove/Install**. To remove and install the same item when required to perform service or other maintenance functions. Install may be the act of emplacing, seating, or fixing into position a spare, repair part, or module (component or assembly) in a manner to allow the proper functioning of an equipment or system.
8. **Replace**. To remove an unserviceable item and install a serviceable counterpart in its place. "Replace" is authorized by the MAC and assigned maintenance level is shown as the third position code of the Source, Maintenance, and Recoverability (SMR) code.
9. **Repair**. The application of maintenance services, including fault location/troubleshooting, removal/installation, disassembly/assembly procedures, and maintenance actions to identify troubles and restore serviceability to an item by correcting specific damage, fault, malfunction, or failure in a part, subassembly, module (component or assembly), end item, or system.

NOTE

The following definitions are applicable to the "repair" maintenance function:

Services - Inspect, test, service, adjust, align, calibrate, and/or replace.

Fault location/troubleshooting - The process of investigating and detecting the cause of equipment malfunctioning; the act of isolating a fault within a system or Unit Under Test (UUT).

Disassembly/assembly - The step-by-step taking apart (or breakdown) of a spare/functional group coded item to the level of its least component identified as maintenance significant (i.e., assigned an SMR code) for the level of maintenance under consideration.

Actions - Welding, grinding, riveting, straightening, facing, machining, and/or resurfacing.

10. **Overhaul**. That maintenance effort (service/action) prescribed to restore an item to a completely serviceable/operational condition as required by maintenance standards in appropriate technical publications. Overhaul is normally the highest degree of maintenance performed by the Army. Overhaul does not normally return an item to like new condition.

11. **Rebuild**. Those services/actions necessary for the restoration of unserviceable equipment to a like new condition in accordance with original manufacturing standards. Rebuild is the highest degree of materiel maintenance applied to Army equipment. The rebuild operation includes the act of returning to zero those age measurements (e.g., hours/miles) considered in classifying Army equipment/components.

EXPLANATION OF COLUMNS IN THE MAC

Columns (1) and (2) - Functional Groups. The functional groupings in the sample below identify maintenance significant components, assemblies, subassemblies, and modules with the next higher assembly.

GROUP NUMBER	DESCRIPTION	GROUP NUMBER	DESCRIPTION
04	POWER PLANT		
0401	ENGINE, GENERAL Servicing, handling inspection requirements, overhaul and retirement schedules. External lines and hoses. (As applicable.)	0405	ACCESSORY GEAR BOX (ACCESSORY SECTION MODULE) Input and output gears, seals, chip detector, housings, drive shaft, bearings.
0402	COMPRESSOR SECTION (COLD SECTION MODULE) Rotor, blades, vanes, impeller, stators, inlet guide vanes, mainframe, particle separator, bleed valve, bearings, seals, external lines and hoses.	0406	FUEL SYSTEM Fuel control, fuel boost pump, governors, fuel filter assembly, sequence valve, fuel manifold, fuel nozzle, external lines and hoses.
0403	COMBUSTION SECTION (HOT SECTION MODULE) Liners, nozzles, stators, rotor, seals, couplings, blades.	0407	ELECTRICAL SYSTEM Electrical control units, exciters, thermocouples, ignition harness, electrical cables, history record, torque overspeed sensor, Np sensor, external lines and hoses.
0404	POWER-TURBINE (POWER TURBINE MODULE) Nozzles, rotors, blades, exit guide vanes, exhaust frame, drive shaft, bearings, seals, external lines and hoses	0408	OIL SYSTEM Tanks, oil filter, oil cooler, lube and scavenger pumps, oil filter bypass sensor, external lines and hoses.

Column (3) - Maintenance Function. Column (3) lists the functions to be performed on the items listed in column (2).

Column (4) - Maintenance Level. The maintenance levels AVUM, AVIM, and DEPOT are listed on the MAC with individual columns that include the work times for maintenance functions at each maintenance level. Work time presentations such as "0.1" indicate the average time (expressed in manhours, in whole hours or decimals) it requires a maintenance level to perform a specified maintenance function. If a work time has not been established, the columnar presentation will indicate "--." Maintenance levels higher than the level of maintenance indicated are authorized to perform the indicated function.

Column (5) - Tools and Equipment Reference Code. Column (5) specifies, by code, those common tool sets (not individual tools), common TMDE, and special tools, special TMDE, and special support equipment required to perform the designated function.

Column (6) - Remarks Code. When applicable, this column contains a letter code, in alphabetical order, which is keyed to the remarks.

EXPLANATION OF COLUMNS IN THE TOOLS AND TEST EQUIPMENT REQUIREMENTS

Column (1) - Tool or Test Equipment Reference Code. The tool or test equipment reference code correlates with a code used in column (5) of the MAC.

Column (2) - Maintenance Level. The lowest level of maintenance authorized to use the tool or test equipment.

Column (3) - Nomenclature. Name or identification of the tool or test equipment.

Column (4) - National Stock Number (NSN). The NSN of the tool or test equipment.

Column (5) - Tool Number. The manufacturer's part number.

EXPLANATION OF COLUMNS IN THE REMARKS

Column (1) - Remarks Code. The code recorded in column (6) of the MAC.

Column (2) - Remarks. This column lists information pertinent to the maintenance function being performed as indicated in the MAC.

SHOP EQUIPMENT CONTACT MAINTENANCE (SECM) MAINTENANCE ALLOCATION CHART

Table 1. MAC for SECM

(1) GROUP NUMBER	(2) DESCRIPTION	(3) MAINTENANCE FUNCTION	(4) MAINTENANCE LEVEL			(5) TOOLS AND EQUIPMENT REF CODE	(6) REMARKS CODE
			AVUM (O)	AVIM (F)	DEPOT (D)		
01	SECM Assembly						
0110	Overhead Rack Assembly	Inspect	0.1				
		Replace	1.0			B01,B02,B90	
		Repair	1.0			B01,B90	
0120	Right Side Box	Inspect	0.1				
		Replace	0.5			B01,B02,B90	
		Repair	1.0			B01,B90	
0130	Box, Main Compartment	Inspect	0.1				
		Replace	1.1			B01,B02,B90	
		Repair	1.0			B01, B90	
013001	Front Door Assembly	Inspect	0.1				
		Replace	0.5			B01,B02,B90	
		Repair	1.0			B01, B90	
013002	Right Back Door Assembly	Inspect	0.1				
		Replace	0.5			B01,B02,B90	
		Repair	1.0			B01, B90	
013003	Left Back Door Assembly	Inspect	0.1				
		Replace	0.5			B01,B02,B90	
		Repair	1.0			B01, B90	
013004	Slider Door Assembly	Inspect	0.1				
		Replace	1.5			B01,B02,B90	
		Repair	1.5			B01, B90	
0140	Left Side Box	Inspect	0.1				
		Replace	0.1			B01,B02,B90	
		Repair	1.0			B01, B90	

Table 2. Tools and Test Equipment for SECM

(1) TOOL OR TEST EQUIPMENT REF CODE	(2) MAINTENANCE CATEGORY	(3) NOMENCLATURE	(4) NATIONAL STOCK NUMBER
B01	UNIT LEVEL	TOOL KIT ACFT. MAINT.	5180-01-375-6925
B02	UNIT LEVEL	TOOL KIT SHEET METAL	5180-01-376-0436
B90	UNIT LEVEL	AVIATION FOOT LOCKER	4920-01-377-5412

Table 3. Remarks for SECM

NOT APPLICABLE

SHOP EQUIPMENT CONTACT MAINTENANCE (SECM) REPAIR PARTS AND SPECIAL TOOLS LIST INTRODUCTION

SCOPE

This RPSTL lists and authorizes spares and repair parts; special tools; special test, measurement, and diagnostic equipment (TMDE); and other special support equipment required for performance of Operator's and Unit maintenance of the SECM. It authorizes the requisitioning, issue, and disposition of spares, repair parts, and special tools as indicated by the source, maintenance, and recoverability (SMR) codes.

GENERAL

In addition to the Introduction work package, this RPSTL is divided into the following work packages.

1. Repair Parts List Work Packages. Work packages containing lists of spares and repair parts authorized by this RPSTL for use in the performance of maintenance. These work packages also include parts, which must be removed for replacement of the authorized parts. Parts lists are composed of functional groups in ascending alphanumeric sequence, with the parts in each group listed in ascending figure and item number sequence. Sending units, brackets, filters, and bolts are listed with the component they mount on. Bulk materials are listed by item name in FIG. BULK at the end of the work packages. Repair parts kits are listed separately in their own functional group and work package. Repair parts for reparable special tools are also listed in a separate work package. Items listed are shown on the associated illustrations.
2. Special Tools List Work Packages. Work packages containing lists of special tools, special TMDE, and special support equipment authorized by this RPSTL (as indicated by Basis of Issue (BOI) information in the DESCRIPTION AND USABLE ON CODE (UOC) column). Tools that are components of common tool sets and/or Class VII are not listed.

EXPLANATION OF COLUMNS IN THE REPAIR PARTS LIST AND SPECIAL TOOLS LIST WORK PACKAGES

ITEM NO. (Column (1)). Indicates the number used to identify items called out in the illustration.

SMR CODE (Column (2)). The SMR code containing supply/requisitioning information, maintenance level authorization criteria, and disposition instruction, as shown in the following breakout:

SOURCE CODE	MAINTENANCE CODE		RECOVERABILITY CODE
XX	XX		X
1st two positions: How to get an item.	3rd position: Who can install, replace, or use the item.	4th position: Who can do complete repair* on the item.	5th position: Who determines disposition action on unserviceable items.

*Complete Repair: Maintenance capacity, capability, and authority to perform all corrective maintenance tasks of the "Repair" function in a use/user environment in order to restore serviceability to a failed item.

Source Code. The source code tells you how you get an item needed for maintenance, repair, or overhaul of an end item/equipment. Explanations of source codes follow:

SOURCE CODE:	APPLICATION/EXPLANATION
PA PB PC PD PE PF PG	Stock items; use the applicable NSN to requisition/request items with these source codes. They are authorized to the level indicated by the code entered in the 3rd position of the SMR code. **NOTE** Items coded PC are subject to deterioration.
KD KF KB	Items with these codes are not to be requested/requisitioned individually. They are part of a kit, which is authorized to the maintenance level indicated in the 3rd position of the SMR code. The complete kit must be requisitioned and applied.
MO-Made at unit/ AVUM level MF-Made at DS/ AVIM level MH-Made at GS level ML-Made at SRA MD-Made at depot	Items with these codes are not to be requisitioned/requested individually. They must be made from bulk material which is identified by the P/N in the DESCRIPTION AND USABLE ON CODE (UOC) column and listed in the bulk material group work package of the RPSTL. If the item is authorized to you by the 3rd position code of the SMR code, but the source code indicates it is made at higher level, order the item from the higher level of maintenance.
AO-Assembled by unit/AVUM level AF-Assembled by DS/AVIM level AH-Assembled by GS level AL-Assembled by SRA AD-Assembled by depot	Items with these codes are not to be requested/requisitioned individually. The parts that make up the assembled item must be requisitioned or fabricated and assembled at the level of maintenance indicated by the source code. If the 3rd position of the SMR code authorizes you to replace the item, but the source code indicates the item is assembled at a higher level, order the item from the higher level of maintenance.
XA	Do not requisition an "XA" coded item. Order the next higher assembly. (Refer to NOTE below.)
XB	If an item is not available from salvage, order it using the CAGEC and P/N.
XC	Installation drawings, diagrams, instruction sheets, field service drawings; identified by manufacturer's P/N.
XD	Item is not stocked. Order an XD-coded item through normal supply channels using the CAGEC and P/N given, if no NSN is available.

NOTE

Cannibalization or controlled exchange, when authorized, may be used as a source of supply for items with the above source codes except for those items source coded "XA" or those aircraft support items restricted by requirements of AR 750-1.

Maintenance Code. Maintenance codes tell you the level(s) of maintenance authorized to use and repair support items. The maintenance codes are entered in the third and fourth positions of the SMR code as follows:

Third Position. The maintenance code entered in the third position tells you the lowest maintenance level authorized to remove, replace, and use an item. The maintenance code entered in the third position will indicate authorization to the following levels of maintenance:

Maintenance Code	Application/Explanation
C	Crew or operator maintenance done within Unit level/AVUM maintenance.
O	Unit level/AVUM maintenance can remove, replace, and use the item.
F	Direct support/AVIM maintenance can remove, replace, and use the item.
H	General support maintenance can remove, replace, and use the item.
L	Specialized repair activity can remove, replace, and use the item.
D	Depot can remove, replace, and use the item.

Fourth Position. The maintenance code entered in the fourth position tells you whether or not the item is to be repaired and identifies the lowest maintenance level with the capability to do complete repair (perform all authorized repair functions).

NOTE

Some limited repair may be done on the item at a lower level of maintenance, if authorized by the Maintenance Allocation Chart (MAC) and SMR codes.

Maintenance Code	Application/Explanation
O	Unit/AVUM is the lowest level that can do complete repair of the item.
F	Direct support/AVIM is the lowest level that can do complete repair of the item.
H	General support is the lowest level that can do complete repair of the item.
L	Specialized repair activity XXXX is the lowest level that can do complete repair of the item.
D	Depot is the lowest level that can do complete repair of the item.
Z	Non-reparable. No repair is authorized.
B	No repair is authorized. No parts or special tools are authorized for maintenance of "B" coded item. However, the item may be reconditioned by adjusting, lubricating, etc., at the user level.

Recoverability Code. Recoverability codes are assigned to items to indicate the disposition action on unserviceable items. The recoverability code is shown in the fifth position of the SMR code as follows:

Recoverability Code	Application/Explanation
Z	Nonreparable item. When unserviceable, condemn and dispose of the item at the level of maintenance shown in the third position of the SMR code.
O	Reparable item. When uneconomically reparable, condemn and dispose of the item at the unit level.
F	Reparable item. When uneconomically reparable, condemn and dispose of the item at the direct support level.
H	Reparable item. When uneconomically reparable, condemn and dispose of the item at the general support level.
D	Reparable item. When beyond lower level repair capability, return to depot. Condemnation and disposal of item are not authorized below depot level.
L	Reparable item. Condemnation and disposal not authorized below Specialized Repair Activity (SRA).
A	Item requires special handling or condemnation procedures because of specific reasons (such as precious metal content, high dollar value, critical material, or hazardous material). Refer to appropriate manuals/directives for specific instructions.

NSN (Column (3)). The NSN for the item is listed in this column.

CAGEC (Column (4)). The Commercial and Government Entity Code (CAGEC) is a five-digit code which is used to identify the manufacturer, distributor, or Government agency/activity that supplies the item.

PART NUMBER (Column (5)). Indicates the primary number used by the manufacturer (individual, company, firm, corporation, or Government activity), which controls the design and characteristics of the item by means of its engineering drawings, specifications, standards, and inspection requirements to identify an item or range of items.

NOTE

When you use an NSN to requisition an item, the item you receive may have a different P/N from the number listed.

DESCRIPTION AND USABLE ON CODE (UOC) (Column (6)). This column includes the following information:

1. The federal item name, and when required, a minimum description to identify the item.
2. P/Ns of bulk materials are referenced in this column in the line entry to be manufactured or fabricated.
3. Hardness Critical Item (HCI). A support item that provides the equipment with special protection from electromagnetic pulse (EMP) damage during a nuclear attack.
4. The statement END OF FIGURE appears just below the last item description in column (6) for a given figure in both the repair parts list and special tools list work packages.

QTY (Column (7)). The QTY (quantity per figure) column indicates the quantity of the item used in the breakout shown on the illustration/figure, which is prepared for a functional group, subfunctional group, or an assembly. A "V" appearing in this column instead of a quantity indicates that the quantity is variable and quantity may change from application to application.

EXPLANATION OF CROSS-REFERENCE INDEXES WORK PACKAGES FORMAT AND COLUMNS

1. National Stock Number (NSN) Index Work Package.

   STOCK NUMBER Column. This column lists the NSN in National item identification number (NIIN) sequence. The NIIN consists of the last nine digits of the NSN.

   NSN
   (e.g., 5385-01-574-1476)
   NIIN

   When using this column to locate an item, ignore the first four digits of the NSN. However, the complete NSN should be used when ordering items by stock number.

   FIG. Column. This column lists the number of the figure where the item is identified/located. The figures are in numerical order in the repair parts list and special tools list work packages.

   ITEM Column. The item number identifies the item associated with the figure listed in the adjacent FIG. column. This item is also identified by the NSN listed on the same line.

2. Part Number (P/N) Index Work Package. P/Ns in this index are listed in ascending alphanumeric sequence (vertical arrangement of letter and number combinations which places the first letter or digit of each group in order A through Z, followed by the numbers 0 through 9 and each following letter or digit in like order).

   PART NUMBER Column. Indicates the P/N assigned to the item.

   FIG. Column. This column lists the number of the figure where the item is identified/located in the repair parts list and special tools list work packages.

   ITEM Column. The item number is the number assigned to the item as it appears in the figure referenced in the adjacent figure number column.

SPECIAL INFORMATION

Fabrication Instructions. Bulk materials required to manufacture items are listed in the bulk material functional group of this RPSTL. Part numbers for bulk material are also referenced in the Description Column of the line item entry for the item to be manufactured/fabricated. Detailed fabrication instructions for items source coded to be manufactured or fabricated are found in TM 1-1500-204-23-10.

Index Numbers. Items, which have the word BULK in the figure column, will have an index number shown in the item number column. This index number is a cross-reference between the NSN / P/N index work packages and the bulk material list in the repair parts list work package.

Illustrations List. The illustrations in this RPSTL contain unit authorized items. Illustrations published in this TM that contain unit-authorized items also appear in this RPSTL. The tabular list in the repair parts list work package contains only those parts coded "O" in the third position of the SMR code, therefore, there may be a break in the item number sequence.

HOW TO LOCATE REPAIR PARTS

1. When NSNs or P/Ns Are Not Known.

   First. Using the table of contents, determine the assembly group to which the item belongs. This is necessary since figures are prepared for assembly groups and subassembly groups, and lists are divided into the same groups.

   Second. Find the figure covering the functional group or the subfunctional group to which the item belongs.

   Third. Identify the item on the figure and note the number(s).

   Fourth. Look in the repair parts list work packages for the figure and item numbers. The NSNs and part numbers are on the same line as the associated item numbers.

2. When NSN Is Known.

   First. If you have the NSN, look in the STOCK NUMBER column of the NSN index work package. The NSN is arranged in NIIN sequence. Note the figure and item number next to the NSN.

   Second. Turn to the figure and locate the item number. Verify the item is the one you are looking for.

3. When P/N Is Known.

   First. If you have the P/N and not the NSN, look in the PART NUMBER column of the P/N index work package. Identify the figure and item number.

   Second. Look up the item on the figure in the applicable repair parts list work package.

SHOP EQUIPMENT CONTACT MAINTENANCE (SECM) REPAIR PARTS AND SPECIAL TOOLS LIST

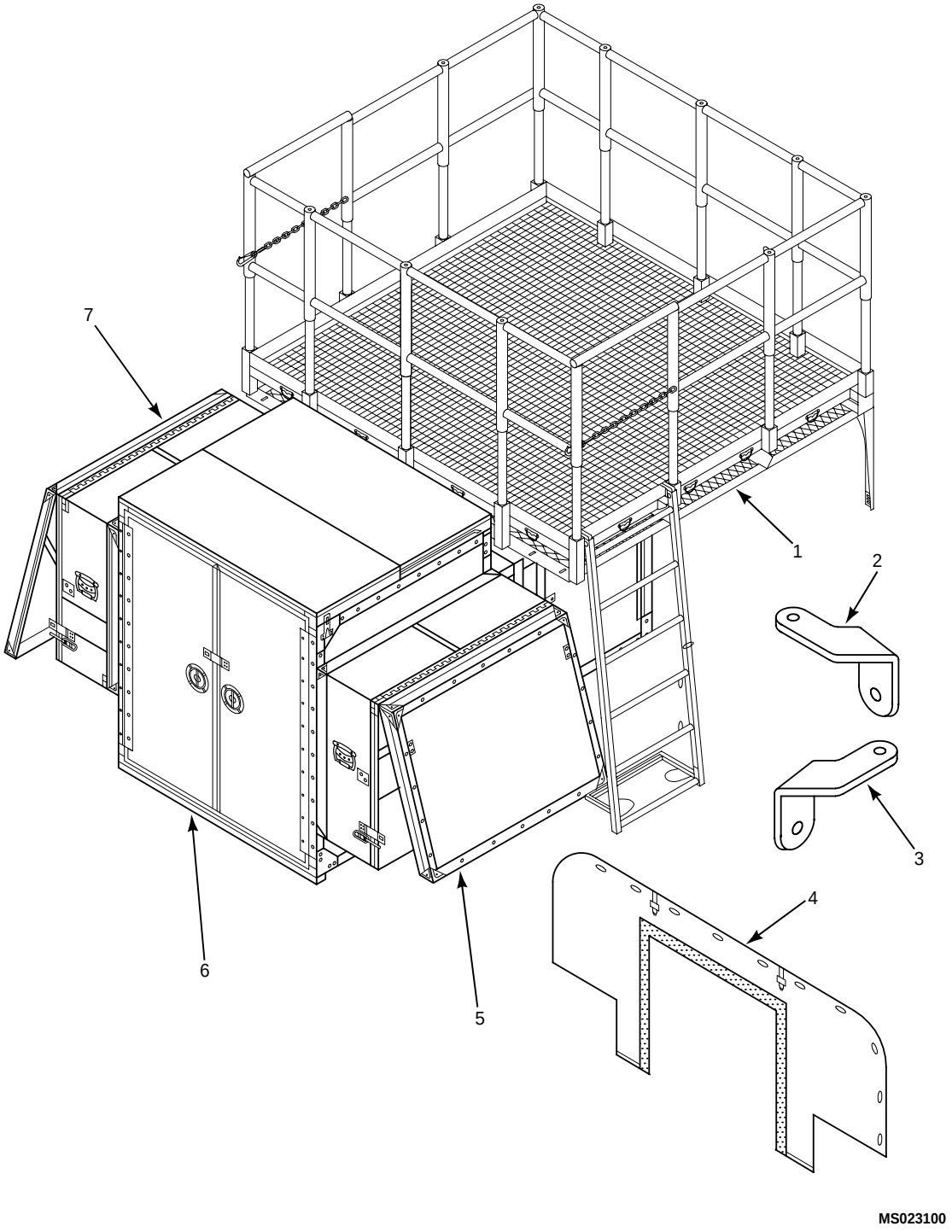

Figure 1. SECM Assembly

(1) ITEM NO.	(2) SMR CODE	(3) NSN	MS P/N WHERE APPLICABLE	(4) CAGE CODE	(5) PART NUMBER	(6) DESCRIPTION AND USABLE ON CODE (UOC)	(7) QTY
						Group 01 Fig. 1. SECM Assembly 50154-001 80298	
*1 * *	XDODD	2590-01-446-8369		81996	1005702	Assembly, Overhead Cargo/ Maintenance Rack (SEE FIGURES 2 THROUGH 2.5 FOR BREAKDOWN)	1
2	XDOZZ			81996	1005746	Bracket, Mirror, Curbside	1
3	XDOZZ			81996	1005745	Bracket, Mirror, Roadside	1
4	PAOZZ	4940-01-447-8587		80298	50154-601	Canvas, Back Wall	1
5	PAOOO	2540-01-446-8362		80298	50154-204	Assembly, Side Box RH (SEE FIG 3 FOR BREAKDOWN)	1
6	PAOOO	2540-01-449-0991		80298	50154-201	Assembly, Main Box (SEE FIG 4 FOR BREAKDOWN)	1
7	PAOOO	2540-01-446-8363		80298	50154-202	Assembly, Side Box LH (SEE FIG 9 FOR BREAKDOWN)	1

END OF FIGURE

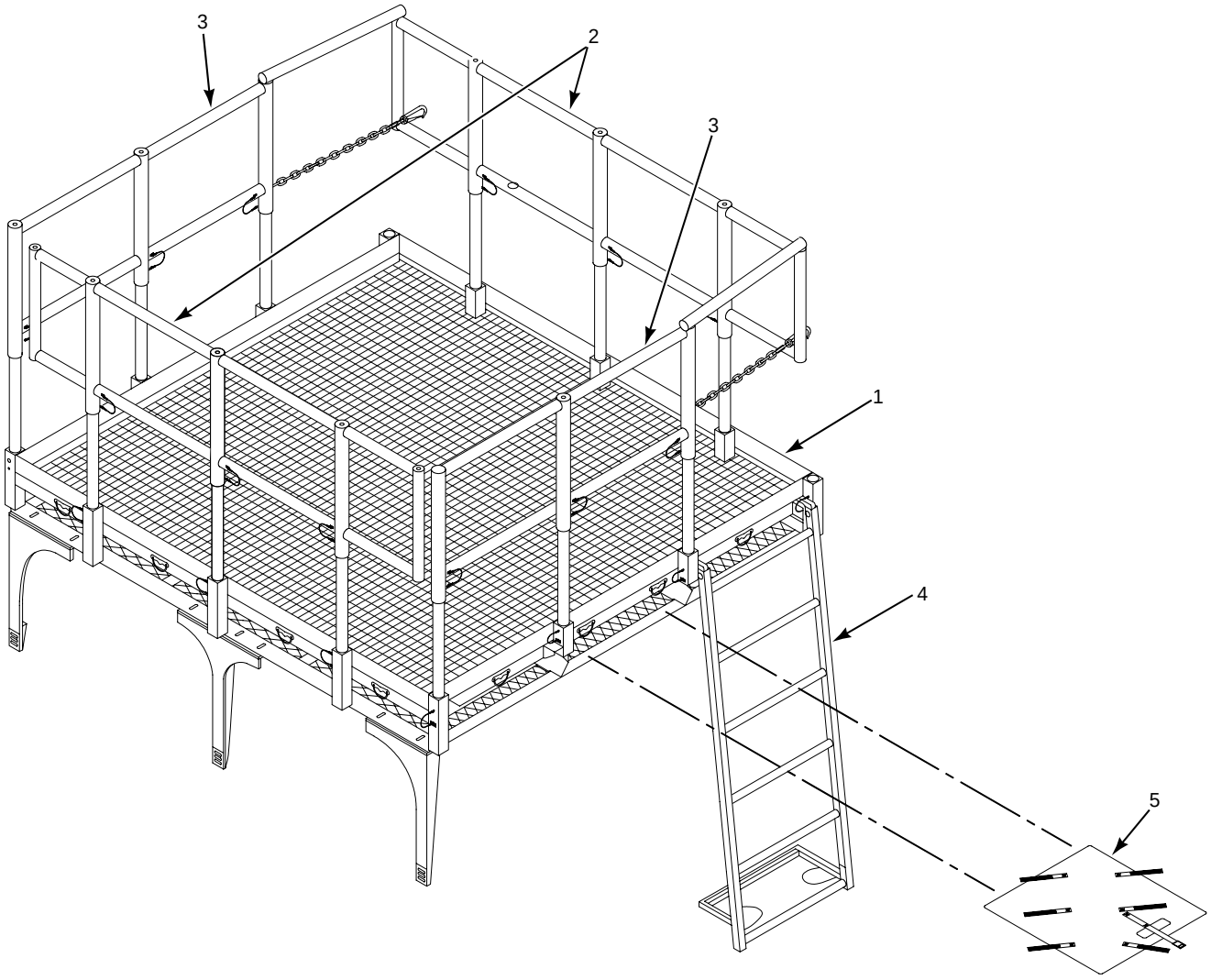

Figure 2. Overhead Cargo/Maintenance Rack Assembly

(1) ITEM NO.	(2) SMR CODE	(3) NSN	MS P/N WHERE APPLICABLE	(4) CAGE CODE	(5) PART NUMBER	(6) DESCRIPTION AND USABLE ON CODE (UOC)	(7) QTY
*						Group 0110 Fig. 2.	
*						Overhead Cargo/Maintenance Rack Assembly	
*						1005702 80298	
*1	XAOZZ			81996	1005714	Assembly, Platform	1
				(SEE FIGURES 2 THROUGH 2.5 FOR BREAKDOWN)			
*2	XDOZZ			81996	1005708	Assembly, Handrail	2
*3	XDOZZ			81996	1005725	Assembly, Handrail, Side	2
*4	XDOZZ			81996	1005703	Assembly, Ladder	2
*5	XDOOO	2540-01-446-8362		81996	1005764	Assembly, Mount, Safety Rail	1

END OF FIGURE

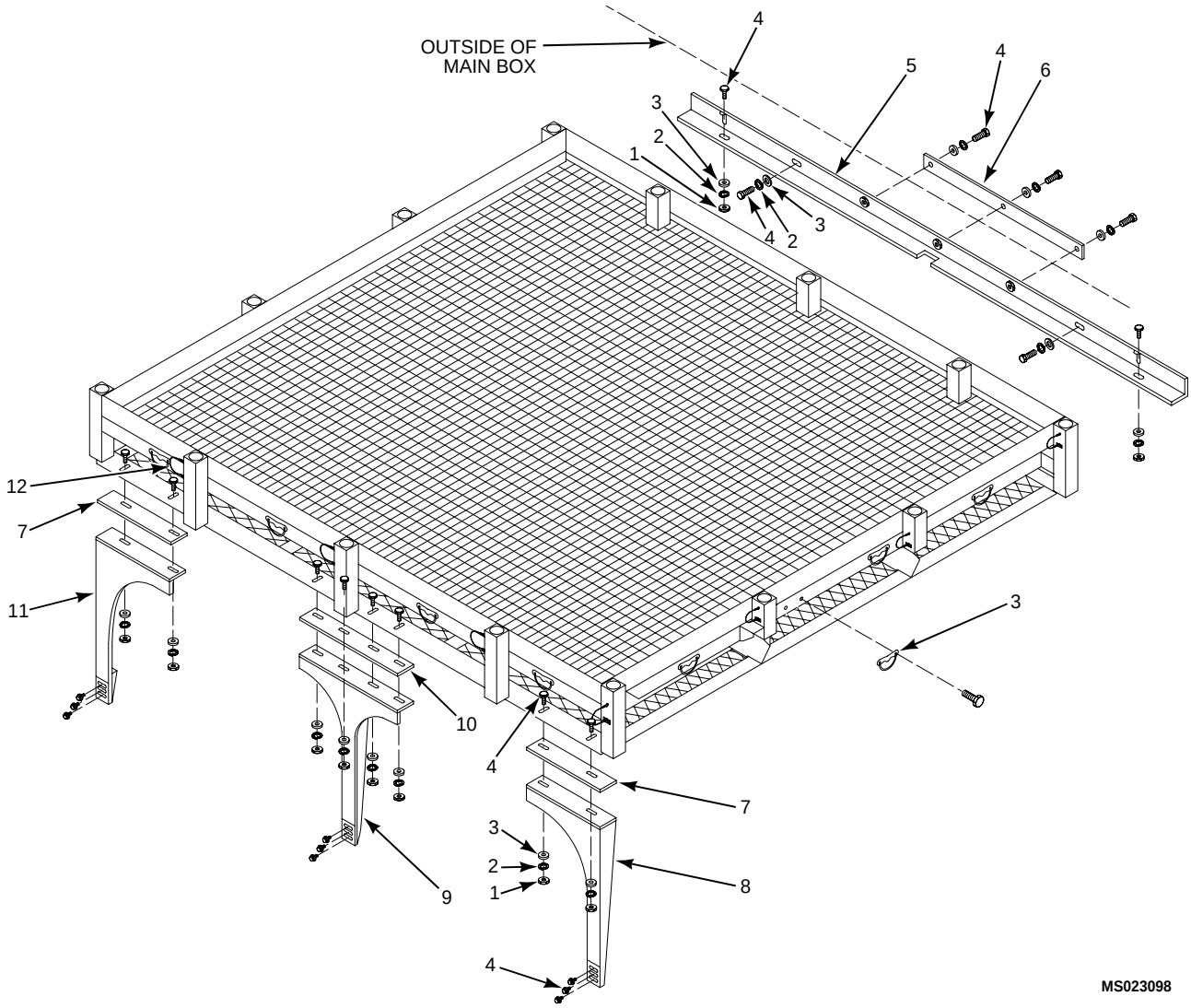

Figure 2.1. Platform Assembly

(1) ITEM NO.	(2) SMR CODE	(3) NSN	MS P/N WHERE APPLICABLE	(4) CAGE CODE	(5) PART NUMBER	(6) DESCRIPTION AND USABLE ON CODE (UOC)	(7) QTY
*						Group 0110 Fig 2.1.	
*						Platform Assembly	
*						1005714 80298	
* 1	PAOZZ	5310-00-477-6768		96906	MS 35649-2384	Hexnut, .375-16UNC	10
* 2	PAOZZ	5310-01-385-9419		96906	MS 35338-141	Washer, Lock .375	15
* 3	PAOZZ	5310-00-773-7618		80205	MS 15795-814	Washer, Flat .375	10
* 4	PAOZZ	5305-01-423-8235		96906	MS 35307-364	Screw, Hex Hd .375-16UNC x 1.50	15
* 5	XDOZZ			81996	1005711	Angle Support	1
* 6	XDOZZ			81996	1005733	Bracket, Inner	1
* 7	XDOZZ			81996	1005754	Shim, Side Spt	2
* 8	XDOZZ			81996	1005722	Support, Side, Curbside	1
* 9	XDOZZ			81996	1005723	Support, Center	1
* 10	XDOZZ			81996	1005755	Shim, Center Spt	1
* 11	XDOZZ			81996	1005731	Support, Side, Roadside	1
* 12	PAOZZ	5315-00-051-4108		80205	NASM17987	Pin, Quick Release w/Lanyard	14

END OF FIGURE

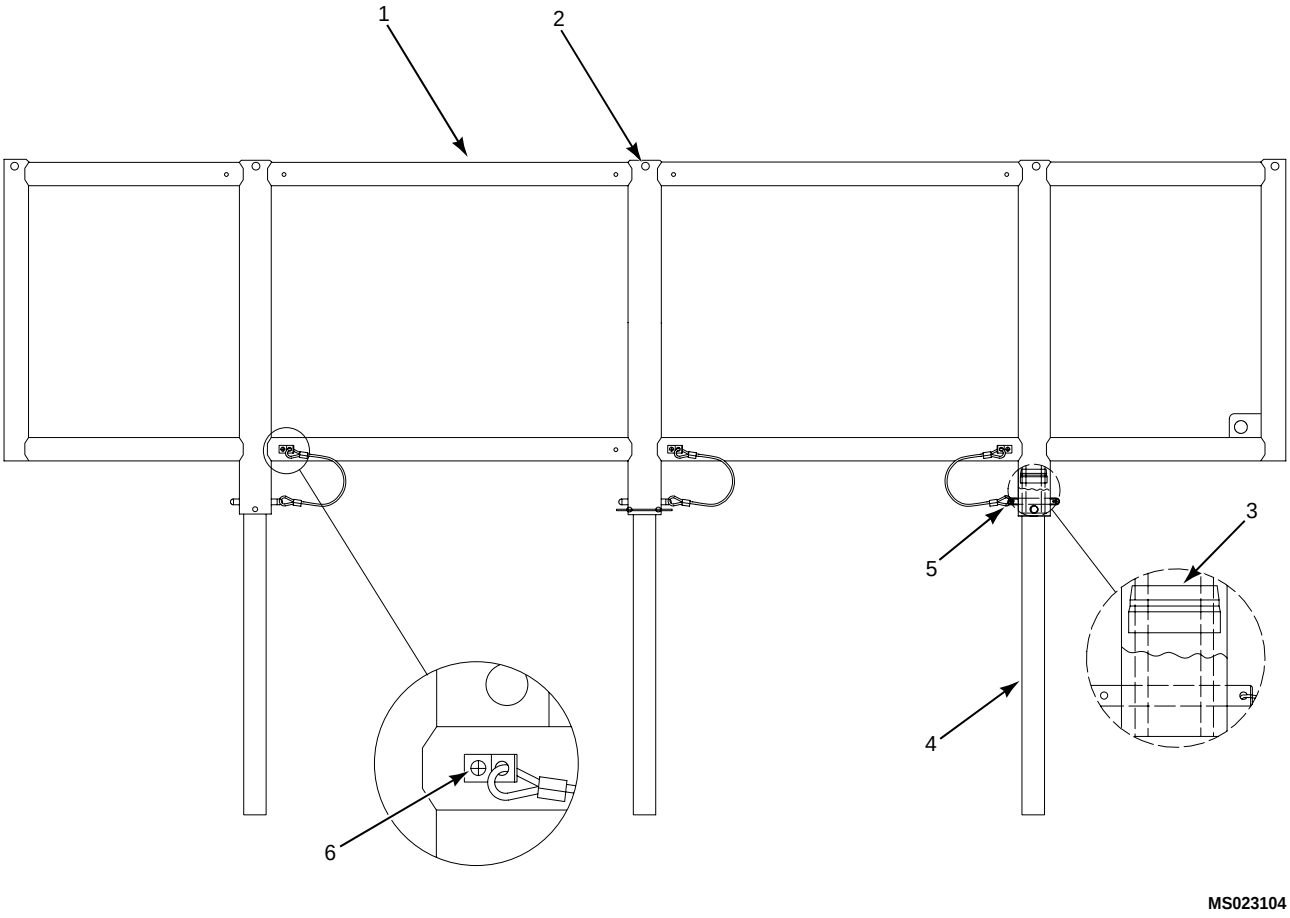

Figure 2.2. Front/Rear Handrail Assembly

(1) ITEM NO.	(2) SMR CODE	(3) NSN	MS P/N WHERE APPLICABLE	(4) CAGE CODE	(5) PART NUMBER	(6) DESCRIPTION AND USABLE ON CODE (UOC)	(7) QTY
*						Group 011001 Fig 2.2.	
*						Front/Rear Handrail Assembly	
*						1005702 80298	
* 1	XDOFF			81996	1005708	Assy, Handrail, Front/Rear	2
* 2	XDOZZ			81996	1005741	Cap, Handrail	3
* 3	XDOZZ			81996	1005739	Bushing, Nylon	2
* 4	XDOFF			81996	1005729	Extension, Handrail	3
* 5	PAOZZ	5315-00-051-4108		80205	NASM17987	Pin, Quick Release w/Lanyard	3
* 6	PAOZZ	5305-01-009-7124		96906	MS 51957-30	Screw, Pan Head #6-32UNV-2B x .500 lg.	3

END OF FIGURE

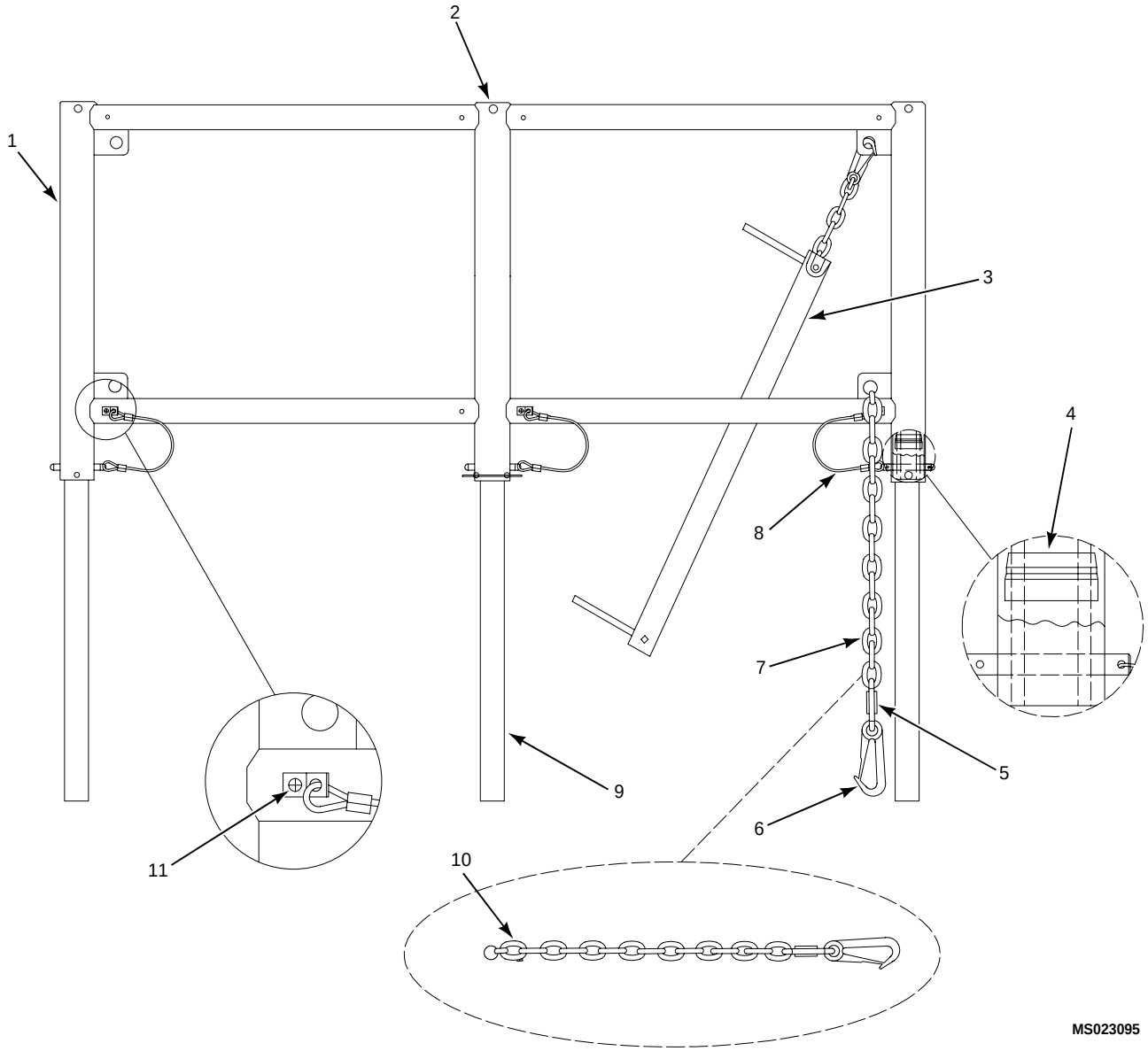

Figure 2.3. Side Handrail Assembly

(1) ITEM NO.	(2) SMR CODE	(3) NSN	MS P/N WHERE APPLICABLE	(4) CAGE CODE	(5) PART NUMBER	(6) DESCRIPTION AND USABLE ON CODE (UOC)	(7) QTY
*						Group 011002 Fig 2.3.	
*						Side Handrail Assembly	
*						1005702 80298	
* 1	XDOFF			81996	1005725	Assy, Handrail, Side	1
* 2	XDOZZ			81996	1005741	Cap, Handrail	3
* 3	XDOZZ			81996	1005724	Handrail, Safety	1
* 4	XDOZZ			81996	1005739	Bushing, Nylon	3
* 5	PAOZZ			39428	8947T27	Connector, Threaded	2
* 6	PAOZZ			39428	3692Y15	Snap, Safety	2
* 7	PAOZZ			OKVE6	3592T15	Chain, Short-Link	AR
* 8	PAOZZ			0KVE6	94975A247	Pin, Quick Release w/Lanyard	3
* 9	XDOZZ			81996	1005729	Extension, Handrail	3
* 10	XDOZZ			81996	1005730	Assy, Chain, Safety	1
* 11	PAOZZ	5305-01-009-7124		96906	MS 51957-30	Screw, Pan Head #6-32UNV-2B x .500 lg.	3

END OF FIGURE

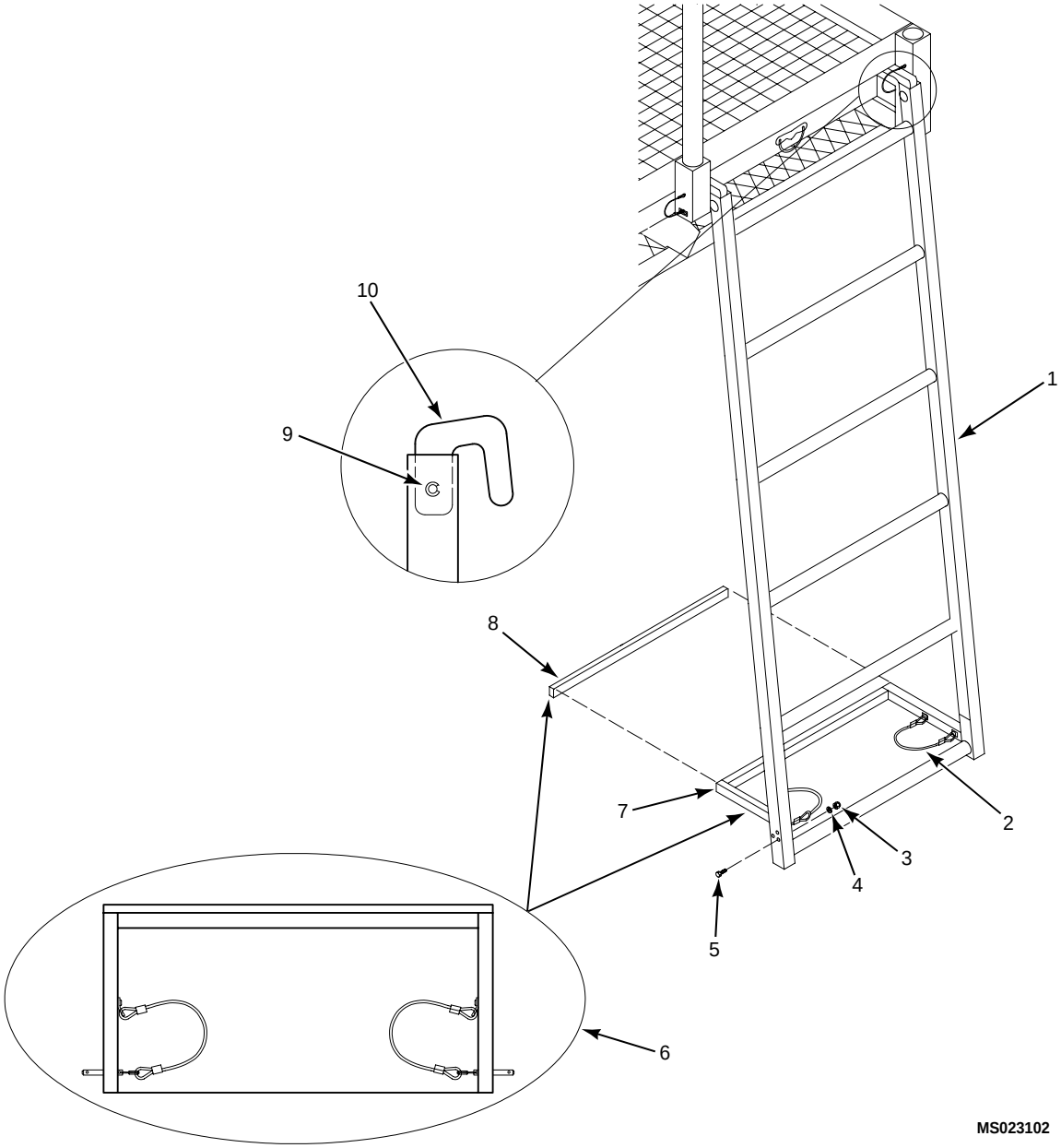

Figure 2.4. Ladder Assembly

(1) ITEM NO.	(2) SMR CODE	(3) NSN	MS P/N WHERE APPLICABLE	(4) CAGE CODE	(5) PART NUMBER	(6) DESCRIPTION AND USABLE ON CODE (UOC)	(7) QTY
*						Group 011003 Fig 2.4.	
*						Ladder Assembly	
*						1005702 80298	
* 1	XDOFF			81996	1005725	Assy, Ladder	1
* 2	PAOZZ			OKVE6	94975A166	Pin, QuickRelease w/Lanyard	2
* 3						Locknut	2
* 4						Flat washer	2
* 5						Bolt	2
* 6	XDOZZ			81996	1005704	Assy, Stabilizer	1
* 7	XDOZZ			81996	1005705	Stabilizer	1
* 8	XDOZZ			81996	1005706	Stop, Rubber	1
* 9	PAOZZ			OKVE6	91735A450	Pin, Clevis w/included E-Ring	2
*10	XDOZZ			81996	1005710	Hook, Ladder	2

END OF FIGURE

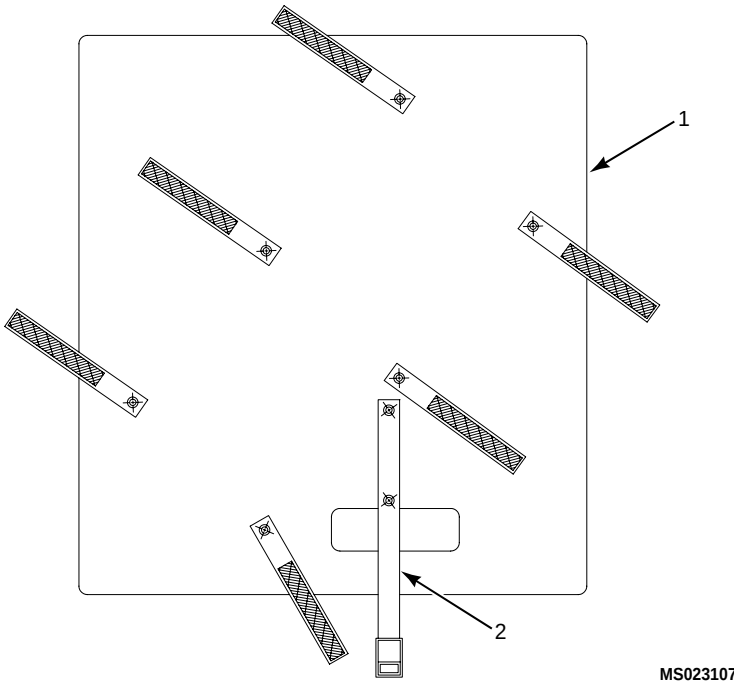

Figure 2.5. Safety Rail Mount Assembly

(1) ITEM NO.	(2) SMR CODE	(3) NSN	MS P/N WHERE APPLICABLE	(4) CAGE CODE	(5) PART NUMBER	(6) DESCRIPTION AND USABLE ON CODE (UOC)	(7) QTY
*						Group 011004 Fig 2.5.	
*						Safety Rail Mount Assembly	
*						1005702 80298	
*1	XDOFF			81996	1005764	Assy, Mount, Safety Rail	1
*2	PAOZZ			81996	1005760	Strapping Assy	5

END OF FIGURE

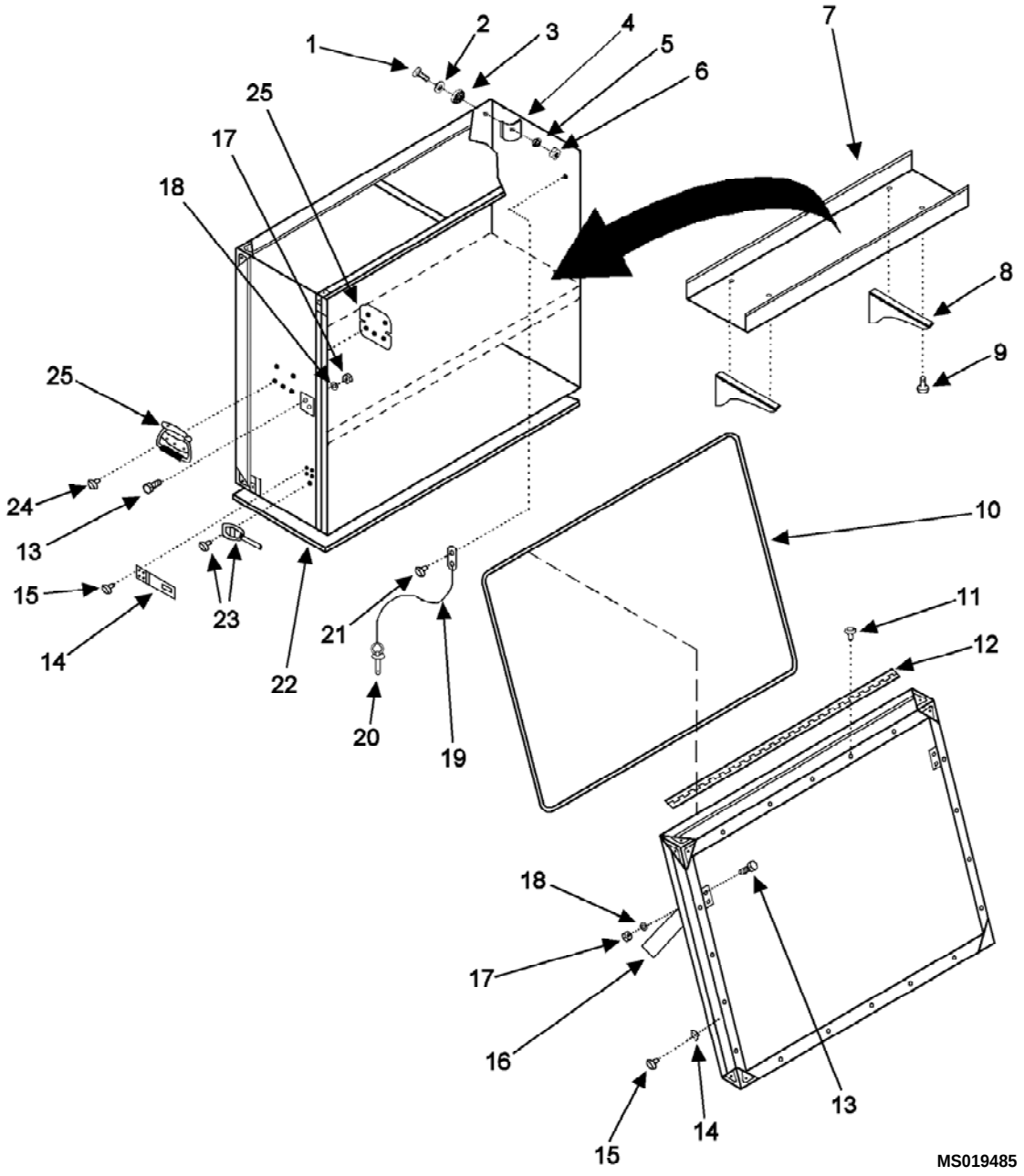

Figure 3. Side Box Right Hand Assembly

(1) ITEM NO.	(2) SMR CODE	(3) NSN	MS P/N WHERE APPLICABLE	(4) CAGE CODE	(5) PART NUMBER	(6) DESCRIPTION AND USABLE ON CODE (UOC)	(7) QTY
						Group 0120, Fig. 3. Side Box Right Hand Assembly 50154-204 80298	
1	XDOOO			96906	97024-010	Bolt, 3/8-16 x 4	4
2	PAOZZ	5310-01-259-0296		96906	MS51412-6	Washer, Flat, 3/8-16	4
3	PAOZZ	5340-01-447-4939		80298	50154-751	Washer, Rubber	4
4	XDOZZ			80298	50154-781	Plate Backing, Curved	4
5	PAOZZ	5310-01-476-1622		39428	91102A031	Washer, Lock, 3/8”	4
6	XDOZZ			80298	82068-001	Nut, Hex, 3/8-16	4
7	XDOZZ			80298	50154-766	Shelf	2
8	XDOZZ			74284	4240-LH-10	Bracket, Shelf	4
9	PAOZZ	5320-01-338-5022		80298	SSPQ-86	Rivet	8
10	XDOZZ			80298	60247-001	Seal, Bulb	1
11	XDOZZ			80298	97004-001	Rivet	17
12	XDOZZ			80298	50154-776	Hinge	1
13	XDOZZ			80298	97002-001	Bolt, Hex, 5/16-18 x 1.00	8
14	XDOZZ			80298	86025-027	Hasp and Staple	1
15	PAOZZ	5320-01-258-6060		05693	BSPQ-610	Rivet	7
16	PAOZZ			80298	98006-001	Stay, Door with Backer	2
17	XDOZZ			80298	97001-001	Nut, Hex, 5/16-18	8
18	PAOZZ	5310-00-974-6623		80298	83001-018	Washer, Lock, 5/16	8
19	XDOZZ			74284	98007-001	Lanyard, 12”	2
20	XDOZZ			74284	9017A560	Pin, Locking	2
21	PAOZZ	5320-01-085-2604		05693	SSPQ-66	Rivet	2
22	XDOZZ			80298	50154-770	Pad, Cross Link	1
23	PAOZZ			80298	98002-001	Latch with Rivets	2
24	XDOZZ			80298	80032-014	Rivet	10
25	XDOZZ			80298	98005-001	Handle and Plate, Backer	2

END OF FIGURE

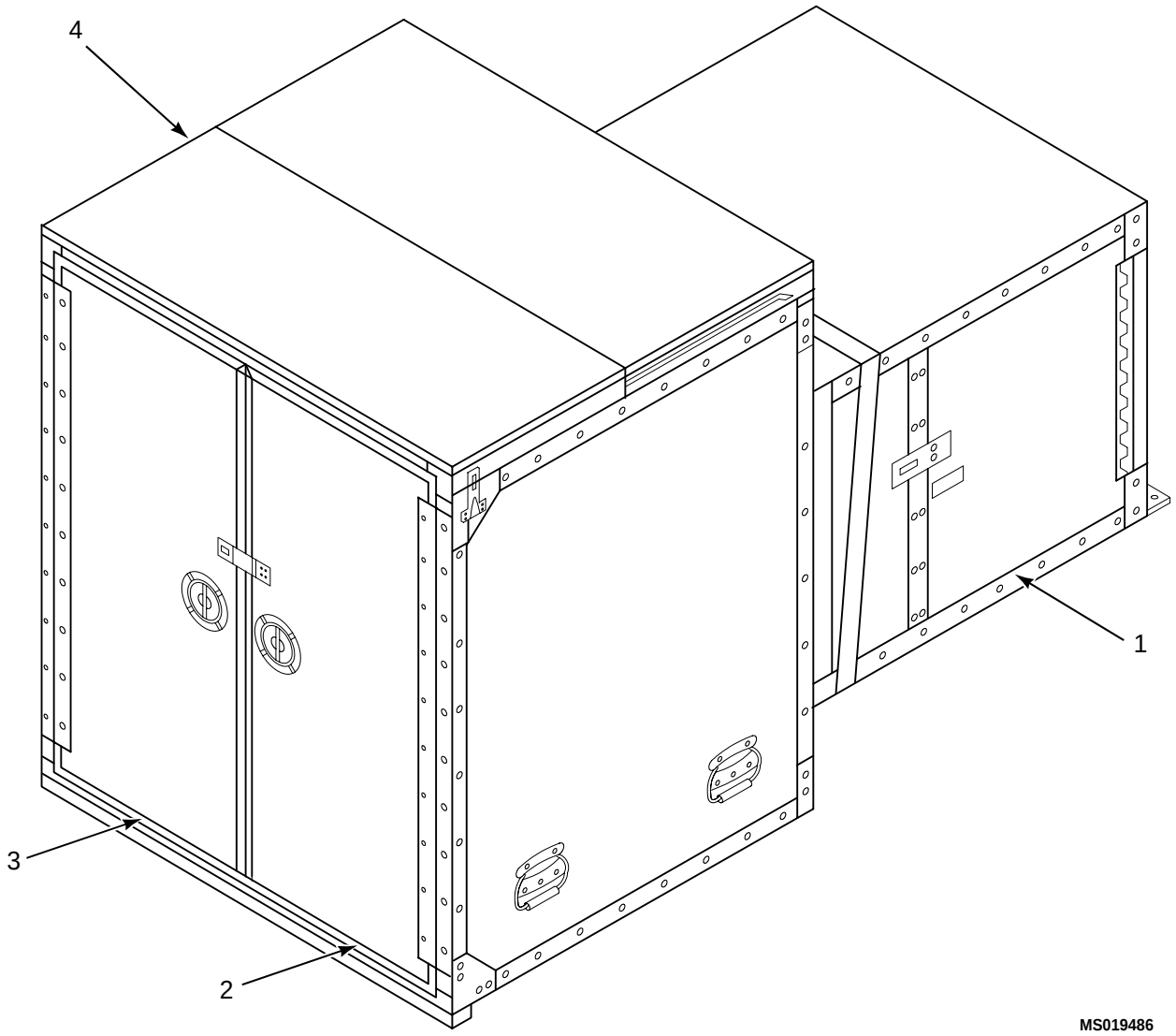

Figure 4. Main Box Assembly (sheet 1 of 2)

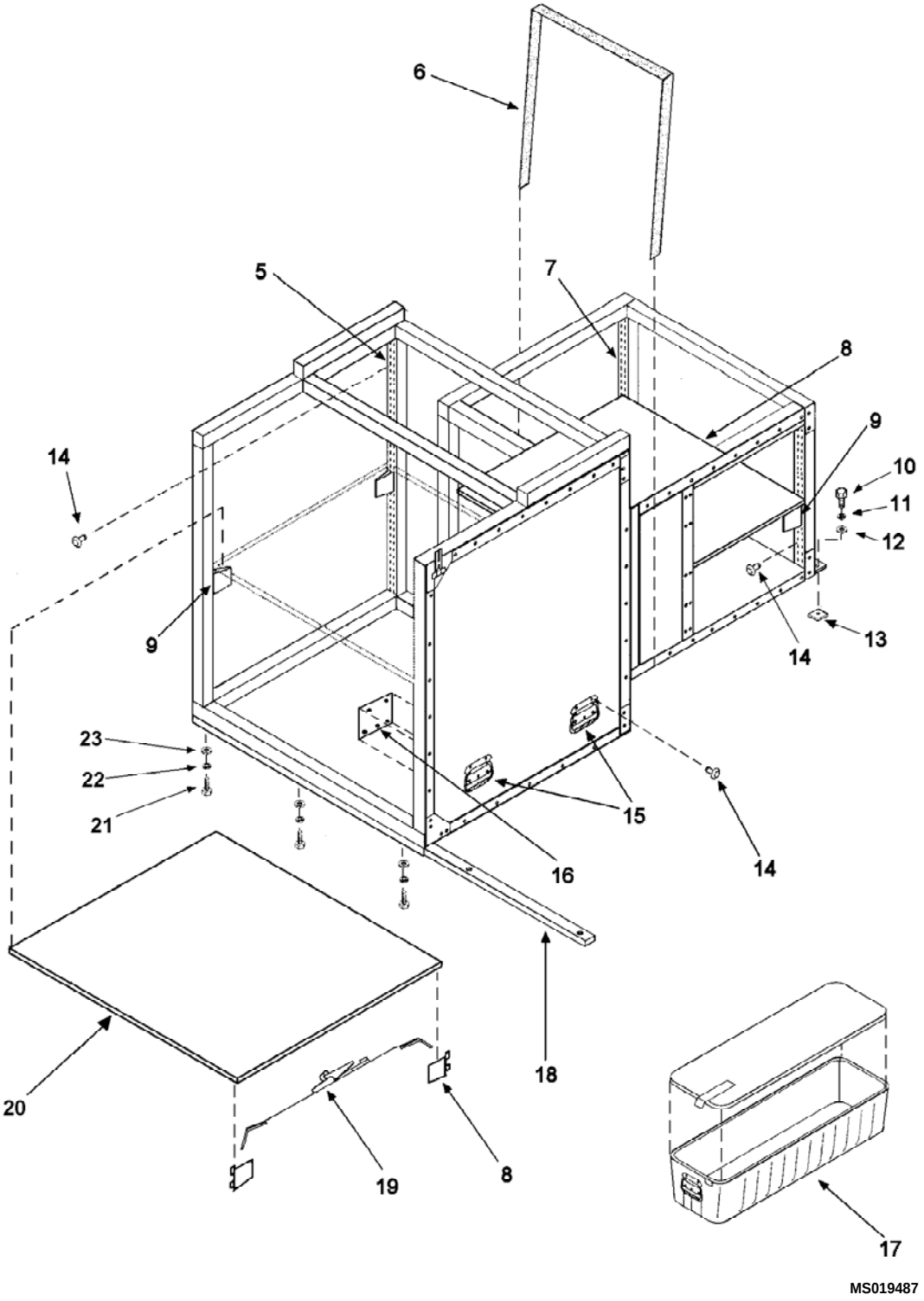

Figure 4. Main Box Assembly (sheet 2 of 2)

(1) ITEM NO.	(2) SMR CODE	(3) NSN	MS P/N WHERE APPLICABLE	(4) CAGE CODE	(5) PART NUMBER	(6) DESCRIPTION AND USABLE ON CODE	(7) QTY
						Group 0130 Fig 4. and Fig. 5. Main Box Assembly 50154-201 80298	
1	PAOOO	5342-01-452-0584		80298	50154-209	Assembly, Door, Front, RH, LH (SEE FIG 5 FOR BREAKDOWN)	2
2	PAOOO	5340-01-446-8364		80298	50154-207	Assembly, Door, Back, RH (SEE FIG 6 FOR BREAKDOWN)	1
3	PAOOO	5340-01-446-8366		80298	50154-206	Assembly, Door, Back LH (SEE FIG 7 FOR BREAKDOWN)	1
4	PAOOO	5340-01-446-8367		80298	50154-210	Assembly, Door, Slider (SEE FIG 8 FOR BREAKDOWN)	1
5	XDOZZ			80298	86012-048	Support, Shelf, 48”	4
6	XDOZZ			39428	9489K98	Velcro	1
7	XDOZZ			80298	86012-024	Support, Shelf, 24”	4
8	XDOZZ			80298	60188-005	Assembly, Shelf, Front	1
9	PAOZZ	5340-01-309-8696		80298	86015-503	Bracket, Shelf	8
10	PAOZZ	5305-00-071-2072	MS35338-48	98906	81009-053	Bolt 1/2-13 x 2.25	2
11	PAOZZ	5010-00-584-5272	MS15795-818	02978	ERNA24S	Washer, Lock	2
12	PAOZZ	5310-00-167-0751		80298	83002-010	Washer, Flat	2
13	XDOZZ			80298	50154-787	Plate, Spacer	2
14	PAOZZ	5320-01-258-6060	MS35305-116	05693	BSPQ-610	Rivet	66
15	XDOZZ			80298	98005-001	Handle, Lifting	6
16	XDOZZ			80298	98005-001	Plate, Backing	6
17	PAOZZ	8145-01-429-4965		80298	50069-001	Tray, Storage 8”	2
18	XDOZZ			74284	50154-799	Bar Rear Mounting	1
19	PAOZZ	5340-01-310-4048		80298	86060-375	Strap, Tie Down	10
20	XDOZZ			80298	60188-006	Assembly, Shelf, Back	1
21	PAOZZ	5305-00-782-9489	MS90725-66	96906	81009-007	Bolt 3/8-16 x 2.00	3
22	PAOZZ	5310-01-476-1622	MS35338-46	39428	91102A031	Washer, Lock 3/8	3
23	PAOZZ	5310-01-259-0296	MS51412-6	96906	83002-001	Washer, Flat 3/8	3

END OF FIGURE

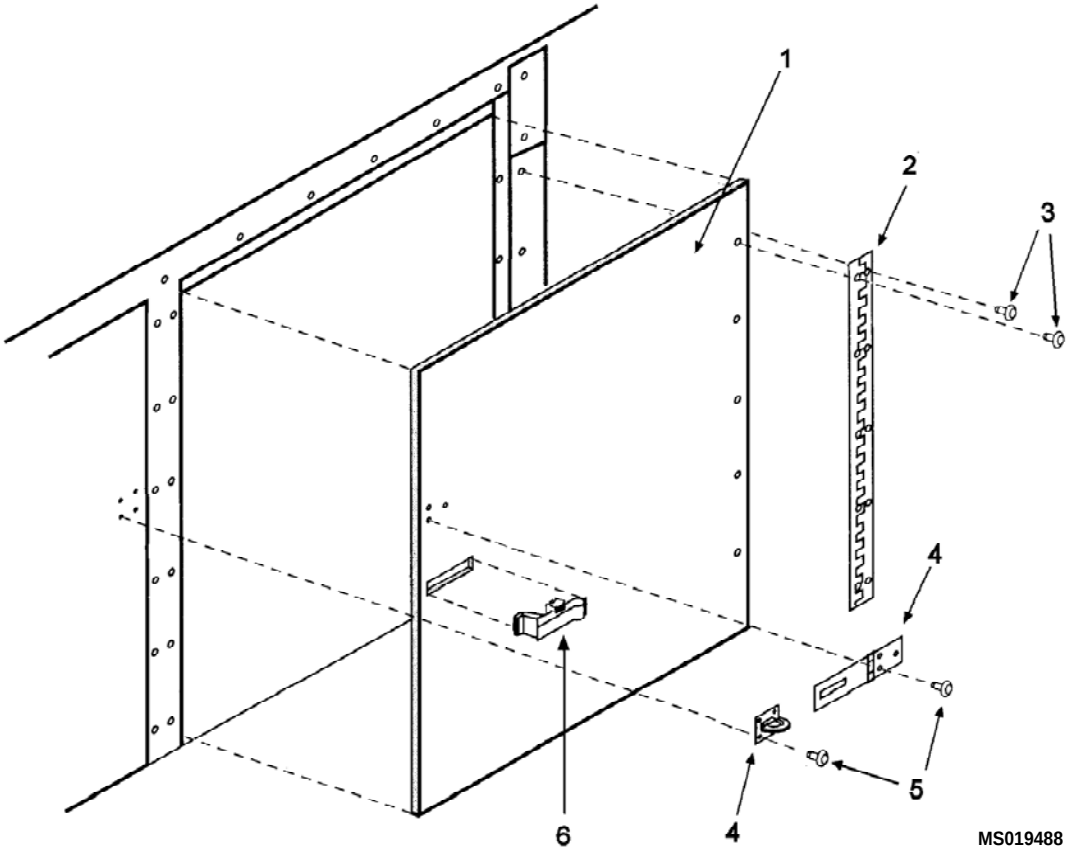

Figure 5. Front Door Assembly

(1) ITEM NO.	(2) SMR CODE	(3) NSN	MS P/N WHERE APPLICABLE	(4) CAGE CODE	(5) PART NUMBER	(6) DESCRIPTION AND USABLE ON CODE (UOC)	(7) QTY
						Group 013001 Fig. 5. Front Door Assembly, RH, LH 50154-209 80298	
1	XDOZZ			80298	50154-742	Plate Door	2
2	XDOZZ			80298	50154-739	Hinge	2
3	PAOZZ	5320-01-321-8626		05693	SSPQ-64	Rivet	20
4	XDOZZ			80298	86025-029	Hasp with Staple	2
5	PAOZZ	5320-01-258-6060		05693	BSPQ-610	Rivet	14
6	XDOOO			24248	C-32-15	Latch, Door	2

END OF FIGURE

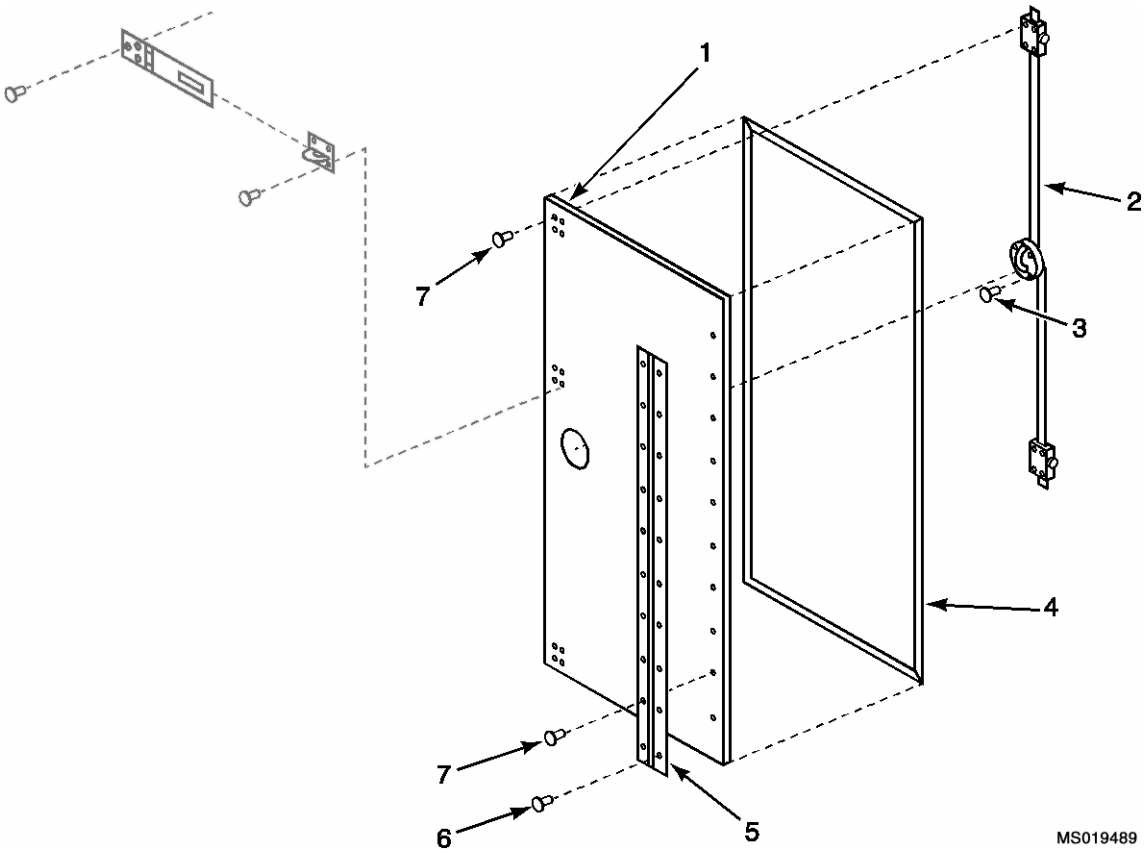

Figure 6. Right Hand Back Door Assembly

(1) ITEM NO.	(2) SMR CODE	(3) NSN	MS P/N WHERE APPLICABLE	(4) CAGE CODE	(5) PART NUMBER	(6) DESCRIPTION AND USABLE ON CODE (UOC)	(7) QTY
						Group 013002 Fig. 6. Right Hand Back Door Assembly 50154-207 80298	
1	XDOZZ			80298	50154-733	Plate Door, RH	1
2	PAOZZ			80298	86025-028	Assembly, Lock, D Ring	1
3	PAOZZ	5320-01-095-2604		05693	SSPQ-66	Rivet	4
4	PAOZZ	5330-01-447-1917		80298	50154-744	Seal, Door	1
5	PAOZZ	5340-01-447-1916		80298	50154-738	Hinge	1
6	XDOZZ			05693	SSPQ-812	Rivet	10
7	PAOZA	5320-01-338-5022		05693	SSPQ-86	Rivet	18

END OF FIGURE

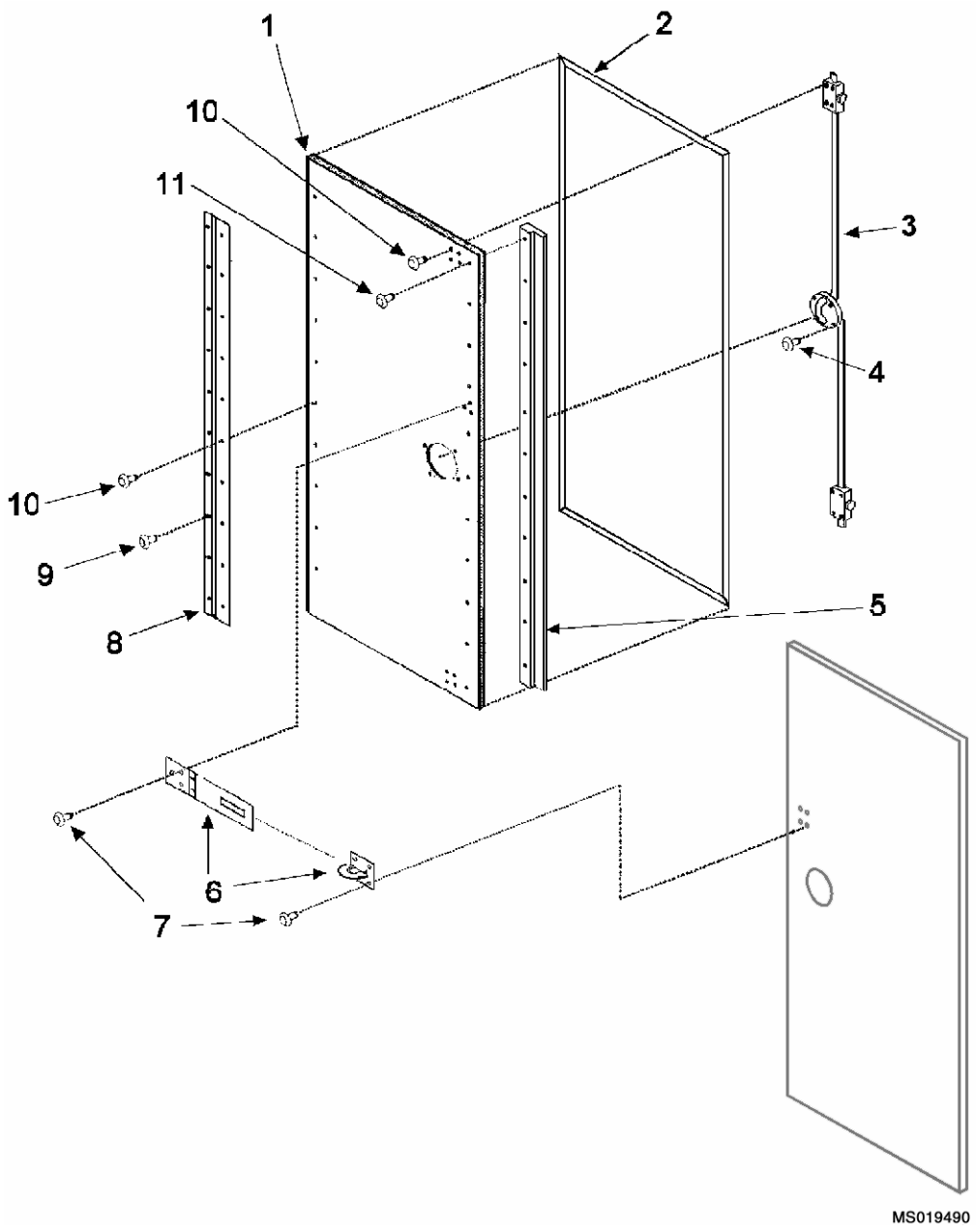

Figure 7. Left Hand Back Door Assembly

(1) ITEM NO.	(2) SMR CODE	(3) NSN	MS P/N WHERE APPLICABLE	(4) CAGE CODE	(5) PART NUMBER	(6) DESCRIPTION AND USABLE ON CODE (UOC)	(7) QTY
						Group 013003 Fig. 7. Left Hand Back Door Assembly 50154-206 80298	
1	XDOZZ			80298	50154-734	Plate Door, LH	1
2	PAOZZ	5330-01-447-1917		80298	50154-744	Seal, Door	1
3	PAOZZ			80298	86025-028	Assembly, Lock, D Ring	1
4	PAOZZ	5320-01-095-2604		05693	SSPQ-66	Rivet	4
5	XDOZZ			80298	50154-727	Stop, Door	1
6	PAOZZ			80298	86025-029	Hasp with Staple	1
7	PAOZZ	5320-01-258-6060		05693	BSPQ-610	Rivet	3
8	PAOZZ	5340-01-447-1916		80298	50154-738	Hinge	1
9	XDOZZ			05693	SSPQ-812	Rivet	10
10	PAOZA	5320-01-338-5022		05693	SSPQ-86	Rivet	18
11	PAOZZ	5320-01-185-1681		05693	SSPQ-810	Rivet	11

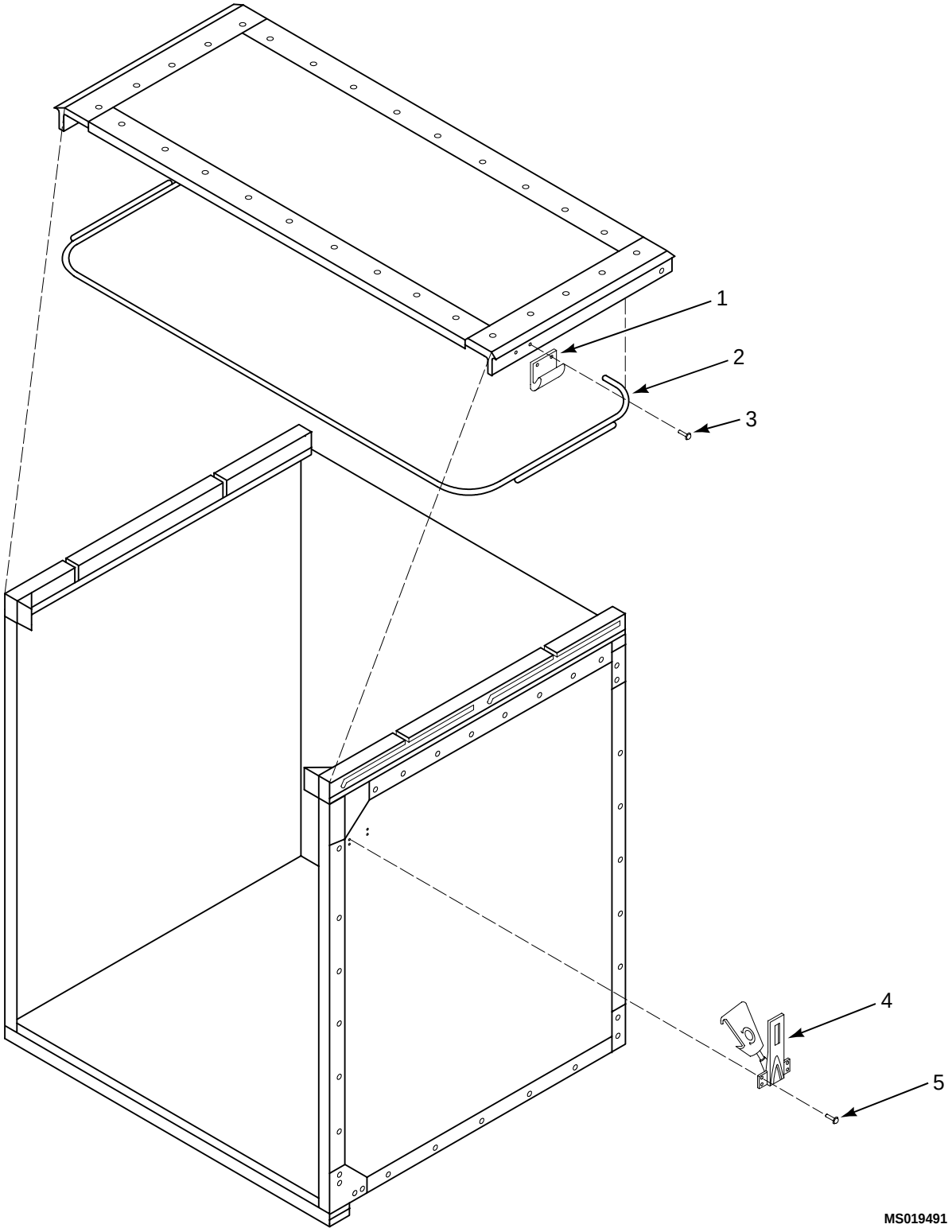

Figure 8. Slider Door Assembly

(1) ITEM NO.	(2) SMR CODE	(3) NSN	MS P/N WHERE APPLICABLE	(4) CAGE CODE	(5) PART NUMBER	(6) DESCRIPTION AND USABLE ON CODE (UOC)	(7) QTY
						Group 013004 Fig. 8. Slider Door Assembly 50154-210 80298	
1	XDOZZ			80298	86025-027	Plate Striker	2
2	XDOZZ			80298	50154-745	Seal, Bulb	1
3	PAOZZ	5320-01-095-2604		05693	SSPQ -66	Rivet	4
4	XDOZZ			80298	86025-026	Latch, Draw	2
5	PAOZZ	5320-01-258-6060		05693	BSPQ-610	Rivet	6

END OF FIGURE

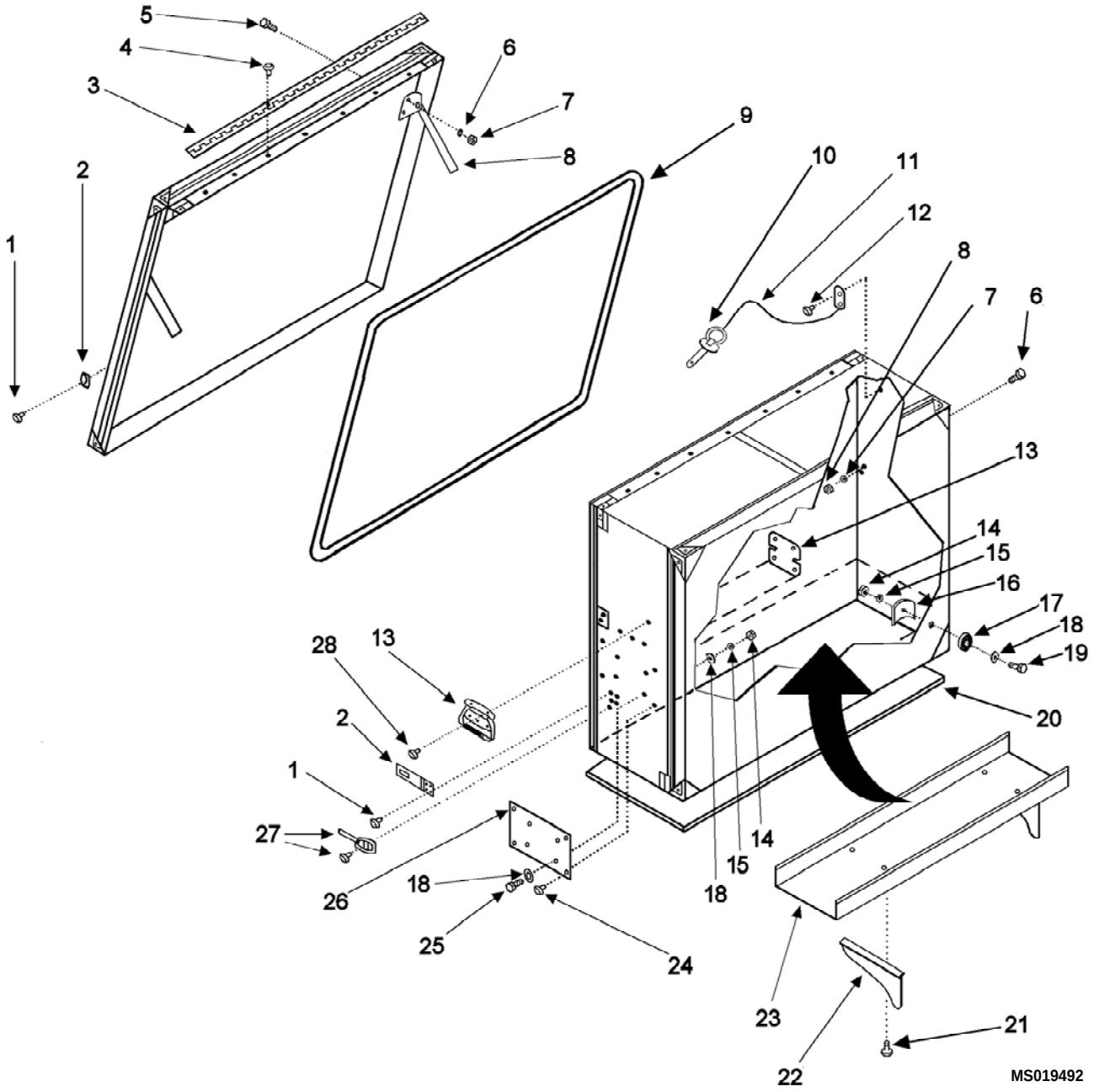

Figure 9. Side Box Left Hand Assembly

(1) ITEM NO.	(2) SMR CODE	(3) NSN	MS P/N WHERE APPLICABLE	(4) CAGE CODE	(5) PART NUMBER	(6) DESCRIPTION AND USABLE ON CODE (UOC)	(7) QTY
						Group 0140 Fig. 9. Side Box Left Hand Assembly 50154-202 80298	
1	PAOZZ	5320-01-258-6060		05693	BSPQ-610	Rivet	7
2	XDOZZ			80298	86025-029	Hasp and Staple	1
3	XDOZZ			80298	50154-776	Hinge	1
4	XDOZZ			80298	97004-001	Rivet	17
5	XDOZZ			80298	97002-001	Bolt, Hex, 5/16-18 x 1.00	8
6	PAOZZ	5310-00-974-6623		80298	83001-018	Washer, Lock, 5/16	8
7	XDOZZ			80298	97001-001	Nut, Hex, 5/16-18	8
8	PAOZZ			80298	98006-001	Stay, Door with Backer	2
9	XDOZZ			80298	60247-001	Seal, Bulb	1
10	XDOZZ			74284	9017A560	Pin, Locking	2
11	XDOZZ			74284	9312A320	Lanyard, 12”	2
12	PAOZZ	5320-01-095-2604		05693	SSPQ-66	Rivet	2
13	XDOZZ			80298	98005-001	Handle and Plate, Backer	2
14	XDOZZ			80298	82068-001	Nut, Hex, 3/8-16	8
15	PAOZZ	5310-01-476-1622		39428	91102A031	Washer, Lock, 3/8”	8
16	XDOZZ			80298	50154-781	Plate Backing, Curved	4
17	PAOZZ	5340-01-447-4939		80298	50154-751	Washer, Rubber	4
18	PAOZZ	5310-01-259-0296		96906	MS51412-6	Washer, Flat, 3/8-16	12
19	XDOOO			96906	97024-010	Bolt, 3/8-16 x 4	4
20	XDOZZ			80298	50154-770	Pad, Cross Link	1
21	PAOZZ	5320-01-338-5022		80298	SSPQ-86	Rivet	8
22	XDOZZ			74284	4240-LH-10	Bracket, Shelf	4
23	XDOZZ			80298	50154-766	Shelf	2
24	XDOZZ			80298	80032-006	Rivet	4
25	XDOZZ			96906	MS90725-62	Bolt, 3/8-16 x 1.25	4
26	XDOZZ			80298	50154-771	Plate, Fuel Can	1
27	XDOZZ			80298	98002-001	Latch with Rivets	2
28	XDOZZ			80298	80032-014	Rivet	10

END OF FIGURE

End Of Work Package

SHOP EQUIPMENT CONTACT MAINTENANCE (SECM) NATIONAL STOCK NUMBER (NSN) INDEX

STOCK NUMBER	FIG.	ITEM
5315-00-051-4108	2.1	12
	2.2	5
5305-00-071-2072	4	10
5310-00-167-0751	4	12
5010-00-584-5272	4	11
5305-00-782-9489	4	21
5310-00-974-6623	3	18
	9	6
5305-01-009-7124	2.1	6
	2.2	11
5320-01-085-2604	3	21
	6	3
	7	4
	8	3
	9	12
5320-01-185-1681	7	11
5320-01-258-6060	3	15
	4	14
	5	5
	7	7
	8	5
	9	1
5310-01-259-0296	3	2
	4	23
	9	18
5340-01-309-8696	4	9

STOCK NUMBER	FIG.	ITEM
5340-01-310-4048	4	19
5320-01-321-8626	5	3
5320-01-338-5022	3	9
	6	7
	7	10
	9	21
8145-01-429-4965	4	17
2540-01-446-8362	1	3
2540-01-446-8363	1	5
5340-01-446-8364	4	2
5340-01-446-8366	4	3
5340-01-446-8367	4	4
2590-01-446-8369	1	1
5340-01-447-1916	6	5
	7	8
5330-01-447-1917	6	4
	7	2
5340-01-447-4939	3	3
	9	17
4940-01-447-8587	1	2
2540-01-449-0991	1	4
5342-01-452-0584	4	1
5310-01-476-1622	3	5
	4	22
	9	15

End Of Work Package

SHOP EQUIPMENT CONTACT MAINTENANCE (SECM) PART NUMBER INDEX

PART NUMBER	FIG.	ITEM
1005702	1	1
1005703	2	4
	2.4	1
1005704	2.4	6
1005705	2.4	7
1005706	2.4	8
1005708	2	2
	2.2	1
1005710	2.4	10
1005711	2.1	5
1005722	2.1	8
1005723	2.1	9
1005724	2.3	3
1005725	2	3
	2.3	1
1005729	2.2	4
	2.3	9
1005730	2.3	10
1005731	2.1	11
1005733	2.1	6
1005739	2.2	3
	2.3	4
1005741	2.2	2
	2.3	2
1005745	1	3
1005746	1	4
1005754	2.1	7
1005755	2.1	10
1005760	2.5	2
1005764	2	5
	2.5	1
3592T15	2.3	7
3692Y15	2.3	6
4240-LH-10	3	8
	9	22
50069-001	4	17
50154-201	1	4
50154-202	1	5
50154-204	1	3
50154-206	4	3
50154-207	4	2
50154-209	4	1
50154-210	4	4
50154-601	1	2
50154-727	7	5
50154-733	6	1
50154-734	7	1
50154-738	6	5
	7	8
50154-739	5	2
50154-742	5	1
50154-744	6	4
	7	2
50154-745	8	2
50154-751	3	3
	9	17
50154-766	3	7
	9	23
50154-770	3	22
	9	20
50154-771	9	26
50154-776	3	12
	9	3
50154-781	3	4
	9	16
50154-787	4	14
50154-799	4	18
60188-005	4	9
60188-006	4	20
60247-001	3	10
	9	9
80032-006	9	24
80032-014	3	24
	9	28
81009-007	4	21
81009-053	4	11
82068-001	3	6
	9	14
83001-018	3	18
	9	6
83002-001	4	23
83002-010	4	13
86012-024	4	7
	4	8
86012-048	4	5
86015-503	4	10
86025-026	8	4
86025-027	3	14
	8	1
86025-028	6	2
	7	3

PART NUMBER	FIG.	ITEM
86025-029	5	4
	7	6
	9	2
86060-375	4	19
8947T27	2.3	5
9017A560	3	20
	9	10
91102A031	3	5
	4	22
	9	15
91735A450	2.4	9
9312A320	9	11
9489K98	4	6
94975A166	2.4	2
94975A247	2.3	8
97001-001	3	17
	9	7
97002-001	3	13
	9	5
97004-001	3	11
	9	4
97024-010	3	1
	9	19
98002-001	3	23
	9	27
98005-001	3	25
	4	16
	9	13
98006-001	3	16
	9	8
98007-001	3	19

PART NUMBER	FIG.	ITEM
BSPQ-610	3	15
	4	15
	5	5
	7	7
	8	5
	9	1
C-32-15	5	6
ERNA24S	4	12
MS 15795-814	2.1	3
MS 35307-364	2.1	4
MS 35338-141	2.1	2
MS 35649-2384	2.1	1
MS 51412-6	3	2
	9	18
MS51957-30	2.1	6
	2.3	11
MS90725-62	9	25
NASM17987	2.1	12
	2.2	5
SSPQ-64	5	3
SSPQ-66	3	21
	6	3
	7	4
	8	3
	9	12
SSPQ-810	7	11
SSPQ-812	6	6
	7	9
SSPQ-86	3	9
	6	7
	7	10
	9	21

End Of Work Package

SHOP EQUIPMENT CONTACT MAINTENANCE (SECM) COMPONENTS OF END ITEM (COEI) AND BASIC ISSUE ITEMS (BII) LISTS

SCOPE

This work package lists COEI and BII for the SECM to help you inventory items for safe and efficient operation of the equipment.

GENERAL

The COEI and BII information is divided into the following lists:

Components of End Item (COEI). This list is for information purposes only and is not authority to requisition replacements. These items are part of the SECM. As part of the end item, these items must be with the end item whenever it is issued or transferred between property accounts. Items of COEI are removed and separately packaged for transportation or shipment only when necessary. Illustrations are furnished to help you find and identify the items.

Basic Issue Items (BII). These essential items are required to place the SECM in operation, operate it, and to do emergency repairs. Although shipped separately packaged, BII must be with the SECM during operation and when it is transferred between property accounts. Listing these items is your authority to request/requisition them for replacement based on authorization of the end item by the TOE/MTOE. Illustrations are furnished to help you find and identify the items.

EXPLANATION OF COLUMNS IN THE COEI LIST AND BII LIST

Column (1) Illus Number. Identifies the figure number where the item is illustrated.

Column (2) National Stock Number (NSN). Identifies the stock number of the item to be used for requisitioning purposes.

Column (3) Description. Identifies the Federal item name (in all capital letters) followed by a minimum description when needed.

Column (4) CAGE Code. Identifies the CAGEC (commercial and Government entity code).

Column (5) Part Number. Identifies the part number.

Column (6) Usable On Code. When applicable, gives you a code if the item you need is not the same for different models of equipment. (Add the following only as applicable. Replace Xs with appropriate codes and model numbers.) These codes are identified below:

Code	Used on
XXX	Model XXX
XXX	Model XXXX
XXX	Model XXXXX

Column (7) Unit of Measure (U/M). Indicates the physical measurement or count of the item as issued per the National Stock Number shown in column (2).

Column (8) Qty Rqr. Indicates the quantity required.

Table 1. Components of End Items (COEI) List

(1) ILLUS NUMBER	(2) NSN	(3) DESCRIPTION	(4) CAGE CODE	(5) PART NUMBER	(6) USABLE ON CODE	(7) U/M	(8) QTY RQR
1		Overhead Cargo/Maintenance Rack Assembly	81996	1005702			1
2	4940-01-447-8587	Rear Curtain Assembly	80298	50154-601			1
3	2540-01-446-8362	Right Side Box Assembly	80298	50154-204			1
4	2540-01-449-0991	Main Box Assembly	80298	50154-201			1
5	2540-01-446-8363	Left Side Box Assembly	80298	50154-202			1

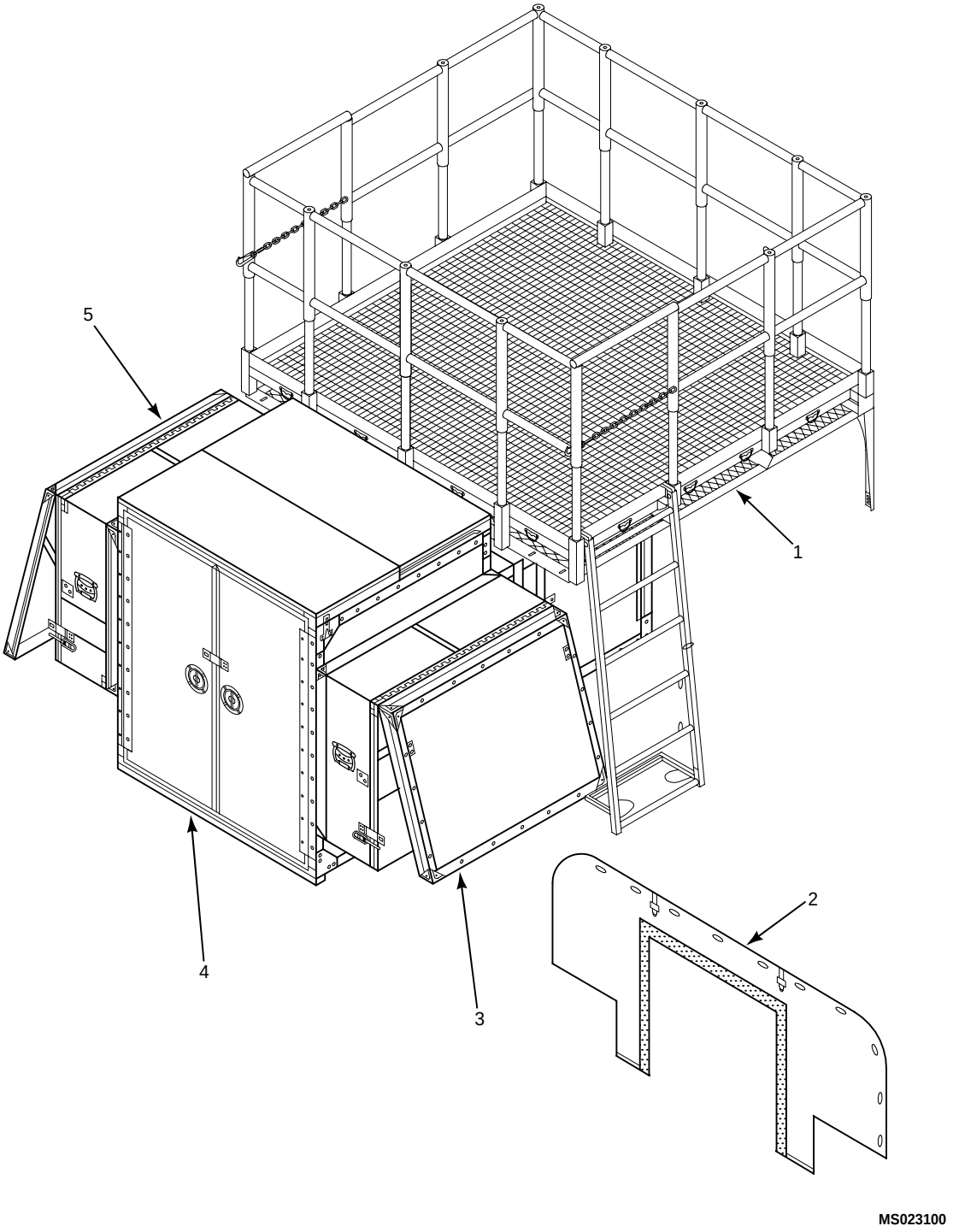

Figure 1. Components of End Items

Table 2. Basic Issue Items (BII) List

NOT APPLICABLE

End Of Work Package

EXPENDABLE AND DURABLE ITEMS LIST

SCOPE

This work package lists expendable and durable items that you will need to operate and maintain the SECM. This list is for information only and is not authority to requisition the listed items. These items are authorized to you by CTA 50-970, Expendable/Durable Items (Except Medical, Class V Repair Parts, and Heraldic Items), or CTA 8-100, Army Medical Department Expendable/Durable Items.

EXPLANATION OF COLUMNS IN THE EXPENDABLE/DURABLE ITEMS LIST

Column (1) Item Number. This number is assigned to the entry in the list and is referenced in the narrative instructions to identify the item (e.g., Use brake fluid (item 5, WP 0098 00)).

Column (2) Level. This column identifies the lowest level of maintenance that requires the listed item (include as applicable: C = Operator/Crew, O = Unit/AVUM, F = Direct Support/AVIM, H = General Support, D = Depot).

Column (3) National Stock Number (NSN). This is the NSN assigned to the item, which you can use to requisition it.

Column (4) Description. This identifies the item.

Column (5) CAGE Code. This identifies the Commercial and Government Entity Code (CAGEC).

Column (6) Part Number. This identifies the part number for the item.

Column (7) Unit of Measure (U/M). This code shows the physical measurement or count of an item, such as gallon, dozen, gross, etc.

Table 1. Expendable and Durable Items List

(1) ITEM NUMBER	(2) LEVEL	(3) NSN	(4) DESCRIPTION	(5) CAGE CODE	(6) PART NUMBER	(7) U/M
1	O	6810-01184-4796	Acetone			gl
2	O	8040-00-142-9193	Adhesive, Liquid, Permabond Cyanoacrylate (Super glue)			bx
3	O	80298 35103-903	Plug, core, 12 “ x 12 “ x 12.25”			sh
4	O	8030-00-723-2746	Proseal Mil-S-8802			kt
5	O	9535-00-084-4448	Aluminum, Sheet, 6061-T6 .063			sh
6	O		Sandpaper, 100 Grit			sh
7	O	9150-00-231-6689	Lubricating Oil, General Purpose, preservative, PL-S	81348	VV-L-800	qt
8	O	8010-00-142-9279	MIL-P-23377, Primer			kt
9	O	8010-01-229-7546	MIL-C-22750, Number 34094(Green 383)			qt
10	O		Loctite, BLUE 243 Non-Permanent	05972	24079	AR
11	O		Loctite, Red 271, Permanent	05972	27141	AR
12	O		Coating, Anti-Slip	OKVE6	6506T51	AR
13	O		RTV Sealing Compound	OKVE6	7587A42	AR

End Of Work Package

By Order of the Secretary of the Army:

Official:

PETER J. SCHOOMAKER
General, United States Army
Chief of Staff

JOEL B. HUDSON
Administrative Assistant to the
Secretary of the Army
0320209

DISTRIBUTION:
To be distributed in accordance with Initial Distribution Number (IDN), 314104, requirements for TM 1-4940-355-12&P.

These are the instructions for sending an electronic 2028

The following format must be used if submitting an electronic 2028. The subject line must be exactly the same and all fields must be included; however only the following fields are mandatory: 1, 3, 4, 5, 6, 7, 8, 9, 10, 13, 15, 16, 17, and 27.

From: “Whomever” <whomever@wherever.army.mil>
To: 2028@redstone.army.mil

Subject: DA Form 2028

1. ***From:*** Joe Smith
2. *Unit:* home
3. ***Address:*** 4300 Park
4. ***City:*** Hometown
5. ***St:*** MO
6. ***Zip:*** 77777
7. ***Date Sent:*** 19−OCT−93
8. ***Pub no:*** 55−2840−229−23
9. ***Pub Title:*** TM
10. ***Publication Date:*** 04−JUL−85
11. *Change Number:* 7
12. *Submitter Rank:* MSG
13. ***Submitter FName:*** Joe
14. *Submitter MName:* T
15. ***Submitter LName:*** Smith
16. ***Submitter Phone:*** 123−123−1234
17. ***Problem:*** **1**
18. *Page:* 2
19. *Paragraph:* 3
20. *Line:* 4
21. *NSN:* 5
22. *Reference:* 6
23. *Figure:* 7
24. *Table:* 8
25. *Item:* 9
26. *Total:* 123
27. ***Text:***

This is the text for the problem below line 27.

RECOMMENDED CHANGES TO PUBLICATIONS AND BLANK FORMS For use of this form, see AR 25–30; the proponent agency is ODISC4.	Use Part II (*reverse)* for Repair Parts and Special Tool Lists (RPSTL) and Supply Catalogs/ Supply Manuals (SC/SM)	DATE 8/30/02

TO: (*Forward to proponent of publication or form)(Include ZIP Code)*	FROM: (*Activity and location)(Include ZIP Code)*
Commander, U.S. Army Aviation and Missile Command ATTN: AMSAM–MMC–MA–NP Redstone Arsenal, AL 35898	MSG, Jane Q. Doe 1234 Any Street Nowhere Town, AL 34565

PART 1 – ALL PUBLICATIONS (EXCEPT RPSTL AND SC/SM) AND BLANK FORMS

PUBLICATION/FORM NUMBER	DATE	TITLE
TM 9–1005–433–24	16 Sep 2002	Organizational, Direct Support, And General Support Maintenance Manual for Machine Gun, .50 Caliber M3P and M3P Machine Gun Electrical Test Set Used On Avenger Air Defense Weapon System

ITEM NO.	PAGE NO.	PARA–GRAPH	LINE NO. *	FIGURE NO.	TABLE NO.	RECOMMENDED CHANGES AND REASON
1	WP0005 PG 3		2			Test or Corrective Action column should identify a different WP number.

** Reference to line numbers within the paragraph or subparagraph.*

TYPED NAME, GRADE OR TITLE	TELEPHONE EXCHANGE/ AUTOVON, PLUS EXTENSION	SIGNATURE
MSG, Jane Q. Doe, SFC	788–1234	

EXAMPLE

TO: (*Forward direct to addressee listed in publication*)	**FROM:** (*Activity and location*) (*Include ZIP Code*)	**DATE**
Commander, U.S. Army Aviation and Missile Command ATTN: AMSAM–MMC–MA–NP Redstone Arsenal, AL 35898	MSG, Jane Q. Doe 1234 Any Street Nowhere Town, AL 34565	8/30/02

PART II – REPAIR PARTS AND SPECIAL TOOL LISTS AND SUPPLY CATALOGS/SUPPLY MANUALS

PUBLICATION NUMBER	DATE	TITLE

PAGE NO.	COLM NO.	LINE NO.	NATIONAL STOCK NUMBER	REFERENCE NO.	FIGURE NO.	ITEM NO.	TOTAL NO. OF MAJOR ITEMS SUPPORTED	RECOMMENDED ACTION

PART III – REMARKS (*Any general remarks or recommendations, or suggestions for improvement of publications and blank forms. Additional blank sheets may be used if more space is needed.*)

TYPED NAME, GRADE OR TITLE	TELEPHONE EXCHANGE/AUTOVON, PLUS EXTENSION	SIGNATURE
MSG, Jane Q. Doe, SFC	788–1234	

EXAMPLE

RECOMMENDED CHANGES TO PUBLICATIONS AND BLANK FORMS For use of this form, see AR 25–30; the proponent agency is ODISC4.	Use Part II (*reverse)* for Repair Parts and Special Tool Lists (RPSTL) and Supply Catalogs/ Supply Manuals (SC/SM)	DATE
TO: (*Forward to proponent of publication or form)(Include ZIP Code)* Commander, U.S. Army Aviation and Missile Command ATTN: AMSAM-MMC-MA-NP Redstone Arsenal, AL 35898	FROM: (*Activity and location)(Include ZIP Code)*	

PART 1 – ALL PUBLICATIONS (EXCEPT RPSTL AND SC/SM) AND BLANK FORMS

PUBLICATION/FORM NUMBER	DATE	TITLE
TM 1-4940-355-12&P	02 September 2003	Operator's and Unit Maintenance Manual Including RPSTL Shop Equipment Contact Maintenance (SECM)

ITEM NO.	PAGE NO.	PARA–GRAPH	LINE NO. *	FIGURE NO.	TABLE NO.	RECOMMENDED CHANGES AND REASON

** Reference to line numbers within the paragraph or subparagraph.*

TYPED NAME, GRADE OR TITLE	TELEPHONE EXCHANGE/ AUTOVON, PLUS EXTENSION	SIGNATURE

TO: (*Forward direct to addressee listed in publication)* Commander, U.S. Army Aviation and Missile Command ATTN: AMSAM-MMC-MA-NP Redstone Arsenal, AL 35898	**FROM:** (*Activity and location) (Include ZIP Code)*	**DATE**

PART II – REPAIR PARTS AND SPECIAL TOOL LISTS AND SUPPLY CATALOGS/SUPPLY MANUALS

PUBLICATION NUMBER	DATE	TITLE
TM 1-4940-355-12&P	02 September 2003	Operator's and Unit Maintenance Manual Including RPSTL Shop Equipment Contact Maintenance (SECM)

PAGE NO.	COLM NO.	LINE NO.	NATIONAL STOCK NUMBER	REFERENCE NO.	FIGURE NO.	ITEM NO.	TOTAL NO. OF MAJOR ITEMS SUPPORTED	RECOMMENDED ACTION

PART III – REMARKS (*Any general remarks or recommendations, or suggestions for improvement of publications and blank forms. Additional blank sheets may be used if more space is needed.)*

TYPED NAME, GRADE OR TITLE	TELEPHONE EXCHANGE/AUTOVON, PLUS EXTENSION	SIGNATURE

RECOMMENDED CHANGES TO PUBLICATIONS AND BLANK FORMS For use of this form, see AR 25–30; the proponent agency is ODISC4.	Use Part II (*reverse)* for Repair Parts and Special Tool Lists (RPSTL) and Supply Catalogs/ Supply Manuals (SC/SM)	DATE
TO: (*Forward to proponent of publication or form)(Include ZIP Code)* Commander, U.S. Army Aviation and Missile Command ATTN: AMSAM-MMC-MA-NP Redstone Arsenal, AL 35898	FROM: (*Activity and location)(Include ZIP Code)*	

PART 1 – ALL PUBLICATIONS (EXCEPT RPSTL AND SC/SM) AND BLANK FORMS

PUBLICATION/FORM NUMBER	DATE	TITLE
TM 1-4940-355-12&P	02 September 2003	Operator's and Unit Maintenance Manual Including RPSTL Shop Equipment Contact Maintenance (SECM)

ITEM NO.	PAGE NO.	PARA–GRAPH	LINE NO. *	FIGURE NO.	TABLE NO.	RECOMMENDED CHANGES AND REASON

** Reference to line numbers within the paragraph or subparagraph.*

TYPED NAME, GRADE OR TITLE	TELEPHONE EXCHANGE/ AUTOVON, PLUS EXTENSION	SIGNATURE

TO: (*Forward direct to addressee listed in publication)* Commander, U.S. Army Aviation and Missile Command ATTN: AMSAM-MMC-MA-NP Redstone Arsenal, AL 35898	**FROM:** (*Activity and location) (Include ZIP Code)*	**DATE**

PART II – REPAIR PARTS AND SPECIAL TOOL LISTS AND SUPPLY CATALOGS/SUPPLY MANUALS

PUBLICATION NUMBER	DATE	TITLE
TM 1-4940-355-12&P	02 September 2003	Operator's and Unit Maintenance Manual Including RPSTL Shop Equipment Contact Maintenance (SECM)

PAGE NO.	COLM NO.	LINE NO.	NATIONAL STOCK NUMBER	REFERENCE NO.	FIGURE NO.	ITEM NO.	TOTAL NO. OF MAJOR ITEMS SUPPORTED	RECOMMENDED ACTION

PART III – REMARKS (*Any general remarks or recommendations, or suggestions for improvement of publications and blank forms. Additional blank sheets may be used if more space is needed.)*

TYPED NAME, GRADE OR TITLE	TELEPHONE EXCHANGE/AUTOVON, PLUS EXTENSION	SIGNATURE

RECOMMENDED CHANGES TO PUBLICATIONS AND BLANK FORMS For use of this form, see AR 25–30; the proponent agency is ODISC4.	Use Part II (*reverse)* for Repair Parts and Special Tool Lists (RPSTL) and Supply Catalogs/ Supply Manuals (SC/SM)	DATE
TO: (*Forward to proponent of publication or form)(Include ZIP Code)* Commander, U.S. Army Aviation and Missile Command ATTN: AMSAM-MMC-MA-NP Redstone Arsenal, AL 35898	FROM: (*Activity and location)(Include ZIP Code)*	

PART 1 – ALL PUBLICATIONS (EXCEPT RPSTL AND SC/SM) AND BLANK FORMS

PUBLICATION/FORM NUMBER	DATE	TITLE
TM 1-4940-355-12&P	02 September 2003	Operator's and Unit Maintenance Manual Including RPSTL Shop Equipment Contact Maintenance (SECM)

ITEM NO.	PAGE NO.	PARA–GRAPH	LINE NO. *	FIGURE NO.	TABLE NO.	RECOMMENDED CHANGES AND REASON

** Reference to line numbers within the paragraph or subparagraph.*

TYPED NAME, GRADE OR TITLE	TELEPHONE EXCHANGE/ AUTOVON, PLUS EXTENSION	SIGNATURE

TO: (*Forward direct to addressee listed in publication)* Commander, U.S. Army Aviation and Missile Command ATTN: AMSAM-MMC-MA-NP Redstone Arsenal, AL 35898	**FROM:** (*Activity and location) (Include ZIP Code)*	**DATE**

PART II – REPAIR PARTS AND SPECIAL TOOL LISTS AND SUPPLY CATALOGS/SUPPLY MANUALS

PUBLICATION NUMBER	DATE	TITLE
TM 1-4940-355-12&P	02 September 2003	Operator's and Unit Maintenance Manual Including RPSTL Shop Equipment Contact Maintenance (SECM)

PAGE NO.	COLM NO.	LINE NO.	NATIONAL STOCK NUMBER	REFERENCE NO.	FIGURE NO.	ITEM NO.	TOTAL NO. OF MAJOR ITEMS SUPPORTED	RECOMMENDED ACTION

PART III – REMARKS (*Any general remarks or recommendations, or suggestions for improvement of publications and blank forms. Additional blank sheets may be used if more space is needed.)*

TYPED NAME, GRADE OR TITLE	TELEPHONE EXCHANGE/AUTOVON, PLUS EXTENSION	SIGNATURE

The Metric System and Equivalents

Linear Measure

1 centimeter = 10 millimeters = .39 inch
1 decimeter = 10 centimeters = 3.94 inches
1 meter = 10 decimeters = 39.37 inches
1 dekameter = 10 meters = 32.8 feet
1 hectometer = 10 dekameters = 328.08 feet
1 kilometer = 10 hectometers = 3,280.8 feet

Weights

1 centigram = 10 milligrams = .15 grain
1 decigram = 10 centigrams = 1.54 grains
1 gram = 10 decigram = .035 ounce
1 decagram = 10 grams = .35 ounce
1 hectogram = 10 decagrams = 3.52 ounces
1 kilogram = 10 hectograms = 2.2 pounds
1 quintal = 100 kilograms = 220.46 pounds
1 metric ton = 10 quintals = 1.1 short tons

Liquid Measure

1 centiliter = 10 milliters = .34 fl. ounce
1 deciliter = 10 centiliters = 3.38 fl. ounces
1 liter = 10 deciliters = 33.81 fl. ounces
1 dekaliter = 10 liters = 2.64 gallons
1 hectoliter = 10 dekaliters = 26.42 gallons
1 kiloliter = 10 hectoliters = 264.18 gallons

Square Measure

1 sq. centimeter = 100 sq. millimeters = .155 sq. inch
1 sq. decimeter = 100 sq. centimeters = 15.5 sq. inches
1 sq. meter (centare) = 100 sq. decimeters = 10.76 sq. feet
1 sq. dekameter (are) = 100 sq. meters = 1,076.4 sq. feet
1 sq. hectometer (hectare) = 100 sq. dekameters = 2.47 acres
1 sq. kilometer = 100 sq. hectometers = .386 sq. mile

Cubic Measure

1 cu. centimeter = 1000 cu. millimeters = .06 cu. inch
1 cu. decimeter = 1000 cu. centimeters = 61.02 cu. inches
1 cu. meter = 1000 cu. decimeters = 35.31 cu. feet

Approximate Conversion Factors

To change	*To*	*Multiply by*	*To change*	*To*	*Multiply by*
inches	centimeters	2.540	ounce-inches	Newton-meters	.007062
feet	meters	.305	centimeters	inches	.394
yards	meters	.914	meters	feet	3.280
miles	kilometers	1.609	meters	yards	1.094
square inches	square centimeters	6.451	kilometers	miles	.621
square feet	square meters	.093	square centimeters	square inches	.155
square yards	square meters	.836	square meters	square feet	10.764
square miles	square kilometers	2.590	square meters	square yards	1.196
acres	square hectometers	.405	square kilometers	square miles	.386
cubic feet	cubic meters	.028	square hectometers	acres	2.471
cubic yards	cubic meters	.765	cubic meters	cubic feet	35.315
fluid ounces	milliliters	29,573	cubic meters	cubic yards	1.308
pints	liters	.473	milliliters	fluid ounces	.034
quarts	liters	.946	liters	pints	2.113
gallons	liters	3.785	liters	quarts	1.057
ounces	grams	28.349	liters	gallons	.264
pounds	kilograms	.454	grams	ounces	.035
short tons	metric tons	.907	kilograms	pounds	2.205
pound-feet	Newton-meters	1.356	metric tons	short tons	1.102
pound-inches	Newton-meters	.11296			

Temperature (Exact)

°F	Fahrenheit temperature	5/9 (after subtracting 32)	Celsius temperature	°C

PIN: 080961-000