TM 9-2815-220-24P

TECHNICAL MANUAL

ORGANIZATIONAL, DIRECT, AND GENERAL SUPPORT

REPAIR PARTS AND SPECIAL TOOLS LIST
(INCLUDING DEPOT MAINTENANCE REPAIR PARTS)

FOR

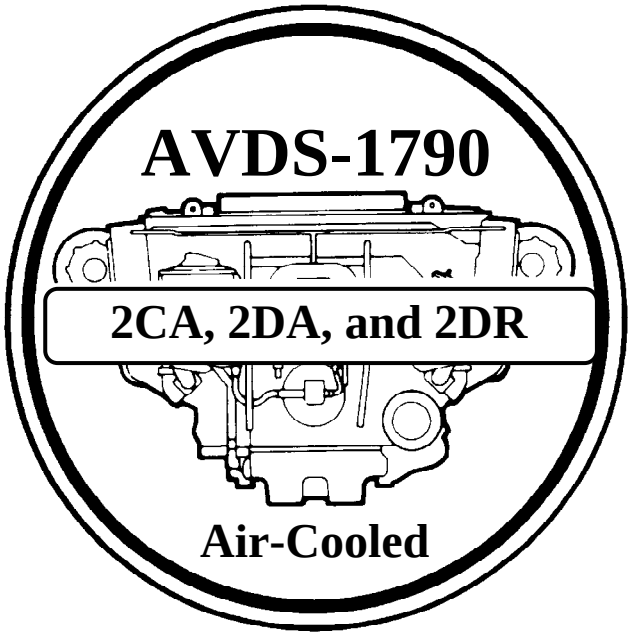

12-Cylinder Diesel Engines

Description	NSN (Engine with Container)
AVDS-1790-2CA:	2815-01-149-1313
AVDS-1790-2DA:	2815-01-166-2051
AVDS-1790-2DR:	2815-00-124-5387

SUPERSEDURE NOTICE - This manual supersedes TM 9-2815-220-34P dated 22 July 1993, and all changes.

DISTRIBUTION STATEMENT A. - Approved for public release, distribution is unlimited.

HEADQUARTERS, DEPARTMENT OF THE ARMY

DECEMBER 2005

INSERT LATEST CHANGED PAGES / WORK PACKAGES. DESTROY SUPERSEDED DATA.

LIST OF EFFECTIVE PAGES / WORK PACKAGES

Dates of issue for original and changed pages / work packages are:

Original 0 31 December 2005

TOTAL NUMBER OF PAGES FOR FRONT AND REAR MATTER IS 20, TOTAL NUMBER OF WORK PACKAGES IS 89, CONSISTING OF THE FOLLOWING:

Page / WP NO.	*Change NO.	Page / WP NO.	*Change NO.
Cover - blank	0		
A - B	0		
WP 0001 00 – 0089 00	0		

*Zero in this column indicates an original page or work package.

NOTE:

Portions of text affected by changes are indicated by a vertical line in the outer margin of the page.

Changes to illustrations are indicated by miniature pointing hands.

Changes to wiring diagrams are indicated by shaded areas.

Technical Manual
NO. 9-2815-220-24P

***TM 9-2815-220-24P**
HEADQUARTERS
DEPARTMENT OF THE ARMY
WASHINGTON, D.C.
31 December 2005

ORGANIZATIONAL, DIRECT, AND GENERAL SUPPORT REPAIR PARTS AND SPECIAL TOOLS LIST (INCLUDING DEPOT MAINTENANCE REPAIR PARTS)

FOR

Description	NSN (Engine with Container)
AVDS-1790-2CA:	2815-01-149-1313
AVDS-1790-2DA:	2815-01-166-2051
AVDS-1790-2DR:	2815-00-124-5387

Reporting Errors and Recommending Improvements

You can help improve this publication. If you find any mistakes or if you know of a way to improve the procedures, please let us know. Submit your DA Form 2028 (Recommended Changes to Equipment Technical Publications), through the Internet, on the Army Electronic Product Support (AEPS) website. The Internet address is http://aeps.ria.army.mil. If you need a password, scroll down and click on "ACCESS REQUEST FORM". The DA Form 2028 is located in the ONLINE FORMS PROCESSING section of the AEPS. Fill out the form and click on SUBMIT. Using this form on the AEPS will enable us to respond quicker to your comments and better manage the DA Form 2028 program. You may also mail, fax or email your letter, DA Form 2028 direct to: Technical Publication Information Office, TACOM-R1, 1 Rock Island Arsenal, Rock Island, IL 61299--7630. The email address is TACOM-TECH-PUBS@ria.army.mil. The fax number is DSN 793-0726 or Commercial (309) 782-0726.

A reply will be furnished directly to you.

DISTRIBUTION STATEMENT A. - Approved for public release; distribution is unlimited.

***SUPERSESSION NOTICE** - This manual supersedes TM 9-2815-220-34P, dated 22 July 1993, and all changes.

TABLE OF CONTENTS

		WP SEQUENCE NUMBER
	INTRODUCTION	0001 00
GROUP 01	ENGINE	0002 00
GROUP 0100	ENGINE ASSEMBLY	0002 00
	TRANSMISSION ADAPTERS, ENGINE LIFTING EYE INSTALLATION GUIDES AND ASSOCIATED PARTS	0002 00
GROUP 0101	CRANKCASE, BLOCK, CYLINDER HEAD	0003 00
	ENGINE BLOCK	0003 00
	CRANKCASE AND CRANKSHAFT STUDS	0004 00
	CRANKCASE AND DRIVE STUDS	0005 00
	CYLINDER HEAD ASSEMBLY	0006 00
GROUP 0102	CRANKSHAFT	0007 00
	CRANKSHAFT ASSEMBLY AND BEARINGS	0007 00
GROUP 0103	FLYWHEEL ASSEMBLY	0008 00
	FLYWHEEL AND ASSOCIATED PARTS	0008 00
GROUP 0104	PISTONS, CONNECTING RODS	0009 00
	PISTONS, RINGS, CONNECTING ROD, AND OIL SPRAYER	0009 00
GROUP 0105	VALVES, CAMSHAFTS AND TIMING SYSTEM	0010 00
	VALVES AND ASSOCIATED PARTS	0010 00
	CAMSHAFT AND DRIVE GEARS (LEFT BANK)	0011 00
	CAMSHAFT AND DRIVE GEARS (RIGHT BANK)	0012 00
GROUP 0106	ENGINE LUBRICATION SYSTEM	0013 00
	CRANKSHAFT DAMPER	0013 00
	OIL FILTER HOUSING	0014 00
	FLUID FILTER HOUSING	0015 00
	OIL GAGE ROD TUBE AND OIL FILLER TUBE	0016 00
	OIL PAN, COVER, AND ASSOCIATED PARTS	0017 00
	OIL PAN AND ASSOCIATED PARTS	0018 00
	OIL PRESSURE COMPARTMENT BAFFLE, OIL PUMP, AND FILLING TUBE	0019 00
	OIL PUMP ASSEMBLY	0020 00
	CYLINDER HEAD OIL DRAIN TUBES	0021 00
	BREATHER TUBES, OIL SUPPLY HOSES, AND OIL COOLER VENT HOSES	0022 00
	OIL COOLERS AND OIL COOLER SCREENS	0023 00
	OIL SAMPLING SYSTEM (MODELS AVDS-1790-2CA AND AVDS-1790-2DA)	0024 00
GROUP 0108	MANIFOLDS	0025 00
	EXHAUST MANIFOLDS (LEFT BANK)	0025 00

TABLE OF CONTENTS - Continued

WP SEQUENCE NUMBER

GROUP 0108 (CONTINUED FROM PREVIOUS PAGE)

EXHAUST MANIFOLDS (RIGHT BANK)..... 0026 00
INTAKE MANIFOLD AND TUBES..... 0027 00

GROUP 0109 ACCESSORY DRIVING MECHANISMS..... 0028 00
GENERATOR AND STARTER DRIVEN IDLER GEARS AND SHAFTS..... 0028 00
ACCESSORY DRIVE HOUSING..... 0029 00
ACCESSORY DRIVE BASE AND GEARSHAFT ASSEMBLIES..... 0030 00
REAR FAN DRIVE..... 0031 00
FRONT FAN DRIVE..... 0032 00
FAN DRIVE CLUTCH ASSEMBLY..... 0033 00
AUTOMATIC INJECTION ADVANCE ASSEMBLY..... 0034 00
PTO/FUEL PUMP DRIVE HOUSING..... 0035 00

GROUP 03 FUEL SYSTEM..... 0036 00

GROUP 0301 CARBURETOR, FUEL INJECTOR..... 0036 00
FUEL INJECTOR NOZZLE AND HOLDER ASSEMBLY... 0036 00

GROUP 0302 FUEL PUMPS..... 0037 00
FUEL INJECTION PUMP, BASE, AND COUPLING ASSEMBLY..... 0037 00
FUEL INJECTOR TUBES AND BRACKETS..... 0038 00
FUEL INJECTOR NOZZLE FUEL RETURN HOSES..... 0039 00
FUEL PUMP AND FUEL BACKFLOW VALVE..... 0040 00
FUEL BACKFLOW VALVE..... 0041 00
SMOKE GENERATING SYSTEM..... 0042 00

GROUP 0305 TURBOCHARGER..... 0043 00
TURBOSUPERCHARGER, TIE ROD, AND BASE..... 0043 00
DUST DETECTOR SYSTEM..... 0044 00

GROUP 0306 TANKS, LINES, FITTINGS, HEADERS..... 0045 00
FUEL SUPPLY HOSE (MODEL AVDS-1790-2DR)..... 0045 00

GROUP 0309 FUEL FILTERS..... 0046 00
WATER SEPARATOR, PRIMARY AND MANIFOLD FUEL FILTERS, AND AUTOMATIC DRAIN CONTROL..... 0046 00
PRIMARY AND WATER SEPARATOR FUEL FILTER ASSEMBLIES..... 0047 00

GROUP 0311 ENGINE STARTING AIDS..... 0048 00
MANIFOLD HEATER ASSEMBLY (LEFT BANK)..... 0048 00
MANIFOLD HEATER ASSEMBLY (RIGHT BANK)..... 0049 00

GROUP 0312 ACCELERATOR, THROTTLE OR CHOKE CONTROLS..... 0050 00

TABLE OF CONTENTS - Continued

		WP SEQUENCE NUMBER
GROUP 0312	(CONTINUED FROM PREVIOUS PAGE)	
	THROTTLE LINKAGE, SOLENOID CONTROL ASSEMBLY, AND MANUAL SHUT-OFF	0050 00
GROUP 04	EXHAUST SYSTEM	0051 00
GROUP 0401	MUFFLER AND PIPES	0051 00
	DUST EJECTOR SYSTEM (MODELS AVDS-1790-2CA AND AVDS-1790-2DA)	0051 00
GROUP 05	COOLING SYSTEM	0052 00
GROUP 0502	COWLING, DEFLECTORS, AIR DUST SHROUDS	0052 00
	ENGINE SHROUDS	0052 00
	OIL COOLER FRAMES AND SHROUDS	0053 00
	TURBOCHARGER AND TRANSMISSION SHROUDING (MODELS AVDS-1790-2CA AND AVDS-1790-2DA)	0054 00
	CYLINDER DEFLECTORS AND SHROUDS	0055 00
GROUP 0505	FAN ASSEMBLY	0056 00
	ENGINE COOLING FAN AND HOUSING	0056 00
GROUP 06	ELECTRICAL SYSTEM	0057 00
GROUP 0601	GENERATOR, ALTERNATOR	0057 00
	ENGINE GENERATOR, CRADLE, AND BRACKET	0057 00
	GENERATOR OIL HOSES (MODEL AVDS-1790-2CA)	0058 00
	GENERATOR AIR DUCT (MODELS AVDS-1790-2DR AND AVDS-1790-2DA)	0059 00
GROUP 0603	STARTING MOTOR	0060 00
	ENGINE STARTER, CRADLE, AND BRACKET	0060 00
GROUP 0606	ENGINE SAFETY CONTROLS	0061 00
	FUEL INJECT PUMP FUEL SHUT-OFF ELECTRICAL LEAD	0061 00
GROUP 0610	SENDING UNITS AND WARNING SWITCHES	0062 00
	STARTER MODULE, OIL PRESSURE AND TEMPERATURE SWITCHES, AND TRANSMITTER	0062 00
GROUP 0613	HULL OR CHASSIS WIRING HARNESS	0063 00
	ENGINE WIRING HARNESS BRACKETS AND CLAMPS (GENERATOR; MODELS AVDS-1790-2CA AND AVDS-1790- 2DA)	0063 00
	ENGINE WIRING HARNESS BRACKETS AND CLAMPS (STARTER; MODELS AVDS-1790-2CA AND AVDS-1790-2DA)	0064 00

TABLE OF CONTENTS - Continued

WP SEQUENCE NUMBER

GROUP 0613 (CONTINUED FROM PREVIOUS PAGE)

ENGINE WIRING HARNESS BRACKETS AND CLAMPS (TRANSMISSION; MODELS AVDS-1790-2CA AND AVDS-1790-2DA) 0065 00
ENGINE WIRING HARNESS BRACKETS AND CLAMPS (MODEL AVDS-1790-2DR) 0066 00
ENGINE WIRING HARNESS CLAMPS (MODEL AVDS-1790-2DR) 0067 00
ENGINE WIRING HARNESS CONNECTORS AND TERMINALS (MODEL AVDS-1790-2CA) 0068 00
ENGINE WIRING HARNESS CONNECTORS AND TERMINALS (MODEL AVDS-1790-2DA) 0069 00
ENGINE WIRING HARNESS CONNECTORS AND TERMINALS (MODEL AVDS-1790-2DR) 0070 00
STARTER WIRING HARNESS (STARTER GROUND; MODEL AVDS-1790-2DR) 0071 00
STARTER WIRING HARNESS (STARTER SOLENOID; MODEL AVDS-1790- 2DR) 0072 00
STARTER/SMOKE GENERATOR AND DUST DETECTOR WIRING HARNESSES (MODELS AVDS-1790-2CA AND AVDS-1790-2DA) 0073 00
TRANSMISSION WIRING HARNESS CONNECTORS AND TERMINALS (MODELS AVDS-1790-2CA AND 2DA) 0074 00
GENERATOR ELECTRICAL LEADS (MODEL AVDS-1790-2CA) 0075 00
GENERATOR ELECTRICAL LEADS (MODEL AVDS-1790-2DA) 0076 00
GENERATOR ELECTRICAL LEAD (MODEL AVDS-1790-2DR) 0077 00

GROUP 22 BODY CHASSIS OR HULL, AND ACCESSORY ITEMS.... ..... 0078 00

GROUP 2210 DATA PLATES AND INSTRUCTION HOLDERS..... ..... 0078 00
IDENTIFICATION PLATES..... ..... 0078 00

GROUP 33 SPECIAL PURPOSE KITS 0079 00

GROUP 3301 REUSABLE SHIPPING CONTAINERS..... ..... 0079 00
ENGINE SHIPPING AND STORAGE CONTAINER.... ..... 0079 00

GROUP 42 ELECTRICAL EQUIPMENT..... ..... 0080 00

GROUP 4210 INSTRUMENTS 0080 00
ENGINE TIME METER..... ..... 0080 00

GROUP 76 FIRE FIGHTING EQUIPMENT COMPONENTS..... .....0081 00

GROUP 7639 FIXED FIRE FIGHTING EQUIPMENT (VEHICULAR) 0081 00
FIRE EXTINGUISHER TUBE..... .....0081 00

GROUP 94 REPAIR PARTS KITS AND SETS..... .....0082 00

GROUP 9401 REPAIR PARTS KITS..... .....0082 00
(LISTED NUMERICALLY BY PART NUMBER) 0082 00

GROUP 95 GENERAL USE STANDARDIZED PARTS 0083 00

GROUP 9501 HARDWARE SUPPLIES AND BULK MATERIEL, COMMON 0083 00
BULK MATERIAL 0083 00

GROUP 26 TOOLS AND TEST EQUIPMENT..... .....0084 00

GROUP 2604 SPECIAL TOOLS..... .....0084 00
SPECIAL TOOLS AND EQUIPMENT 0084 00
SPECIAL TOOLS AND EQUIPMENT 0085 00
SPECIAL TOOLS AND EQUIPMENT 0086 00
SPECIAL TOOLS AND EQUIPMENT 0087 00

NATIONAL STOCK NUMBER INDEX..... .....0088 00
PART NUMBER INDEX 0089 00

INTRODUCTION

SCOPE

This Repair Parts and Special Tools List (RPSTL) lists and authorizes spares and repair parts; special tools; special test, measurement, and diagnostic equipment (TMDE); and other special support equipment required for performance of unit, direct support, and general support maintenance of the AVDS-1790 Diesel Engine. It authorizes the requisitioning, issue, and disposition of spares, repair parts, and special tools as indicated by the Source, Maintenance, and Recoverability (SMR) codes.

GENERAL

In addition to the Introduction work package, this RPSTL is divided into the following work packages.

1. Repair Parts List Work Packages. Work packages contain lists of spares and repair parts authorized by this RPSTL for use in the performance of maintenance. These work packages also include parts which must be removed for replacement of the authorized parts. Parts lists are composed of functional groups in ascending alphanumeric sequence, with the parts in each group listed in ascending figure and item number sequence. Bulk materials are listed by item name in FIG. BULK at the end of the work packages. Repair parts kits are listed separately in their own functional group and work package. Repair parts for reparable special tools are also listed in a separate work package. Items listed are shown on the associated illustrations.

2. Special Tools List Work Packages. Work packages containing lists of special tools, special TMDE, and other special support equipment authorized by this RPSTL (as indicated by Basis of Issue (BOI) information in the DESCRIPTION AND USABLE ON CODES (UOC) column) for the performance of maintenance.

3. Cross-Reference Indexes Work Packages. There are two cross-reference indexes work packages in this RPSTL: the National Stock Number (NSN) Index work package and the Part Number (P/N) Index work package. The National Stock Number Index work package refers you to the figure and item number. The Part Number Index work package refers you to the figure and item number.

EXPLANATION OF COLUMNS IN THE REPAIR PARTS LIST AND SPECIAL TOOLS LIST WORK PACKAGES

ITEM NO. (Column (1)). Indicates the number used to identify items called out in the illustration.

SMR CODE (Column (2)). The SMR code containing supply/requisitioning information, maintenance level authorization criteria, and disposition instruction, as shown in the following breakout:

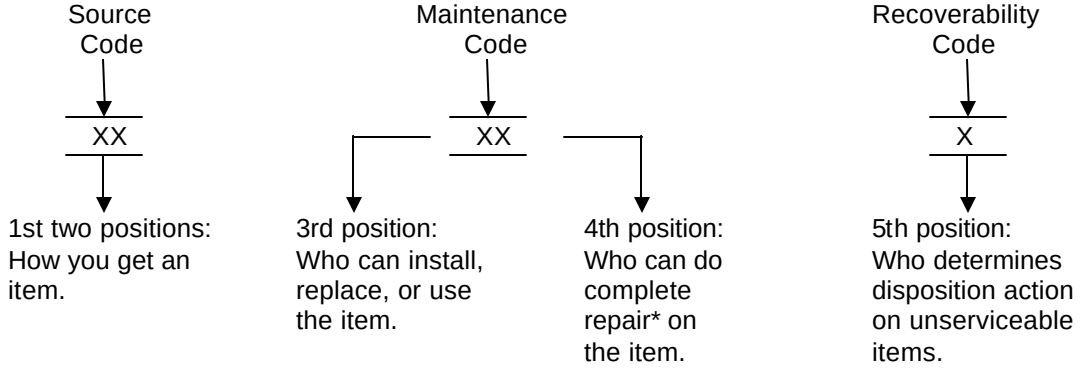

* Complete Repair: Maintenance capacity, capability, and authority to perform all corrective maintenance tasks of the “Repair” function in a use/user environment in order to restore serviceability to a failed item.

Source Code. The source code tells you how to get an item needed for maintenance, repair, or overhaul of an end item/equipment. Explanations of source codes follow:

Source Code	Application/Explanation
PA PB PC PD PE PF PG	Stocked items; use the applicable NSN to request/ requisition items with these source codes. They are authorized to the level indicated by the code entered in the 3rd position of the SMR code. **NOTE** Items coded PC are subject to deterioration.
KD KF KB	Items with these codes are not to be requested/ requisitioned individually. They are part of a kit which is authorized to the maintenance level indicated in the 3rd position of the SMR code. The complete kit must be requisitioned and applied.
MO - (Made at unit level) MF - (Made at DS level) MH - (Made at GS level) MD - (Made at depot level)	Items with these codes are not to be requested/ requisitioned individually. They must be made from bulk material which is identified by the P/N in the DESCRIPTION AND USABLE ON CODES (UOC) column and listed in the bulk material group work package of the RPSTL. If the item is authorized to you by the 3rd position code of the SMR code, but the source code indicates it is made at a higher level, order the item from the higher level of maintenance.
AO - (Assembled by unit level) AF - (Assembled by DS level) AH - (Assembled by GS level) AD - (Assembled by depot level)	Items with these codes are not to be requested/ requisitioned individually. The parts that make up the assembled item must be requisitioned or fabricated and assembled at the level of maintenance indicated by the source code. If the 3rd position of the SMR code authorizes you to replace the item, but the source code indicates the item is assembled at a higher level, order the item from the higher level of maintenance.
XA	Do not requisition an “XA” coded item. Order the next higher assembly. (Refer to NOTE below.)
XB	If an item is not available from salvage, order it using the CAGEC and P/N.
XD	Item is not stocked. Order an XD-coded item through normal supply channels using the CAGEC and P/N given, if no NSN is available.

NOTE

Cannibalization or controlled exchange, when authorized, may be used as a source of supply for items with the above source codes, except for those items source coded “XA”.

Maintenance Code. Maintenance codes tell you the level(s) of maintenance authorized to use and repair support items. The maintenance codes are entered in the third and fourth positions of the SMR code as follows:

Third Position. The maintenance code entered in the third position tells you the lowest maintenance level authorized to remove, replace, and use an item. The maintenance code entered in the third position will indicate authorization to the following levels of maintenance:

Maintenance Code	Application/Explanation
C -	Crew or operator maintenance done within unit maintenance.
O -	Unit level maintenance can remove, replace, and use the item.
F -	Direct support maintenance can remove, replace, and use the item.
H -	General support maintenance can remove, replace, and use the item.
K -	Only a contractor facility can remove, replace, and use the item.
L -	Only a designated specialized repair activity can remove, replace, and use the item.
D -	Depot maintenance can remove, replace, and use the item.

Fourth position. The maintenance code entered in the fourth position tells you whether or not the item is to be repaired and identifies the lowest maintenance level with the capability to do complete repair (perform all authorized repair functions).

NOTE

Some limited repair may be done on the item at a lower level of maintenance, if authorized by the Maintenance Allocation Chart (MAC) and SMR codes.

Maintenance Code	Application/Explanation
O -	Unit is the lowest level that can do complete repair of the item.
F -	Direct support is the lowest level that can do complete repair of the item.
H -	General support is the lowest level that can do complete repair of the item.
K -	Designated Contractor Logistic Support (CLS) is the lowest level that can do complete repair of the item.
L -	Only the designated Specialized Repair Activity is the lowest level that should perform complete repair of the item.
D -	Depot is the lowest level that can do complete repair of the item.
Z -	Nonreparable. No repair is authorized.
B -	No repair is authorized. No parts or special tools are authorized for the maintenance of “B” coded item. However, the item may be reconditioned by adjusting, lubricating, etc., at the user level.

Recoverability Code. Recoverability codes are assigned to items to indicate the disposition action on unserviceable items. The recoverability code is entered in the fifth position of the SMR code as follows:

Recoverability Code	Application/Explanation
Z -	Nonreparable item. When unserviceable, condemn and dispose of the item at the level of maintenance shown in 3rd position of SMR code.
O -	Reparable item. When uneconomically reparable, condemn and dispose of the item at unit level.
F -	Reparable item. When uneconomically reparable, condemn and dispose of the item at the direct support level.
H -	Reparable item. When uneconomically reparable, condemn and dispose of the item at the general support level.
K -	Reparable item. Condemnation and disposal to be performed at contractor facility.
D -	Reparable item. When beyond lower level repair capability, return to depot. Condemnation and disposal of item not authorized below depot level.
L -	Reparable item. Repair, condemnation and disposal not authorized below depot level.
A -	Item requires special handling or condemnation procedures because of specific reasons (such as precious metal content, high dollar value, critical material, or hazardous material). Refer to appropriate manuals/directives for specific instructions.

NSN (Column (3)). The National Stock Number (NSN) for the item is listed in this column.

CAGEC (Column (4)). The Commercial and Government Entity Code (CAGEC) is a 5-digit code which is used to identify the manufacturer, distributor, or Government agency/activity that supplies the item.

PART NUMBER (Column (5)). Indicates the primary number used by the manufacturer (individual, company, firm, corporation, or Government activity), which controls the design and characteristics of the item by means of its engineering drawings, specifications standards, and inspection requirements to identify an item or range of items.

NOTE

When you use an NSN to requisition an item, the item you receive may have a different P/N from the part ordered.

DESCRIPTION AND USABLE ON CODES (UOC) (Column (6)). This column includes the following information:

1. The federal item name and, when required, a minimum description to identify the item.

2. The Controlled Item Inventory Code (CIIC) of the item is indicated by the parenthetical entry as follows: CIIC(C) - Confidential, CIIC(H) - Secret: Restricted Data, CIIC(S) - Secret, CIIC(T) - Top Secret.

3. Items that are included in kits and sets are listed below the name of the kit or set in FIG.KITS.

4. Spare/repair parts that make up an assembled item are listed immediately following the assembled line item entry.

5. NSN (or P/N if no NSN is assigned) for bulk materials is referenced in this column in the line item entry for the item to be manufactured/fabricated.

6. When the item is not used with all serial numbers of the same model, the effective serial numbers are shown on the last line(s) of the description (before UOC).

7. The usable on code, when applicable (see Special Information).

8. In the Special Tools work package, the basis of issue (BOI) appears as the last line(s) in the entry for each special tool, special TMDE, and other special support equipment. When density of equipment supported exceeds density spread indicated in the basis of issue, the total authorization is increased proportionately.

9. The statement END OF FIGURE appears just below the last item description in column (6) for a given figure in both the repair parts list and special tools list work packages.

QTY (Column (7)). The QTY (quantity per figure) column indicates the quantity of the item used in the breakout shown on the illustration/figure, which is prepared for a functional group, subfunctional group, or an assembly. A “V” appearing in this column instead of a quantity indicates that the quantity is variable and the quantity may change from application to application.

EXPLANATION OF CROSS-REFERENCE INDEXES WORK PACKAGES FORMAT AND COLUMNS

1. National Stock Number (NSN) Index Work Package.

STOCK NUMBER Column. This column lists the NSN by National Item Identification Number (NIIN) sequence. The NIIN consists of the last nine digits of the NSN.

NSN (e.g., 5385-01-574-1476) NIIN	When using this column to locate an item, ignore the first four digits of the NSN. However, the complete NSN should be used when ordering items by stock number.

FIG. Column. This column lists the number of the figure where the item is identified/located. The figures are in numerical order in the repair parts list and special tools list work packages.

ITEM Column. The item number identifies the item associated with the figure listed in the adjacent FIG. column. This item is also identified by the NSN listed on the same line.

2. Part Number (P/N) Index Work Package. P/Ns in this index are listed in ascending alphanumeric sequence (vertical arrangement of letter and number combinations which places the first letter or digit of each group in order A through Z, followed by the numbers 0 through 9 and each following letter or digit in like order).

CAGEC Column. The Commercial and Government Entity Code (CAGEC) is a 5-digit alphanumeric code used to identify the manufacturer, distributor, or Government agency, etc., that supplies the item.

PART NUMBER Column. Indicates the P/N assigned to the item.

STOCK NUMBER Column. This column lists the NSN for the associated part number and manufacturer identified in the PART NUMBER and CAGEC columns to the left.

FIG. Column. This column lists the number of the figure where the item is identified/located in the repair parts list and special tools list work packages.

ITEM Column. The item number is the number assigned to the item as it appears in the figure referenced in the adjacent figure number column.

SPECIAL INFORMATION

UOC. The UOC appears in the lower left corner of the Description Column heading. Usable on codes are shown as "UOC: ..." in the Description Column (justified left) on the first line under the applicable item/nomenclature. Uncoded items are applicable to all models. Identification of the UOCs used in the RPSTL are:

Code	Item Nomenclature	Used On
2CA	Engine and Container: AVDS-1790-2CA	M60A1 (RISE)
2DA	Engine and Container: AVDS-1790-2DA	M60A1 AVLB
EFR	Engine with Container: AVDS-1790-2DR	M88A1

Fabrication Instructions. Bulk materials required to manufacture items are listed in the bulk material functional group of this RPSTL. Part numbers for bulk material is also referenced in the Description Column of the line item entry for the item to be manufactured/fabricated. Detailed fabrication instructions for items source coded to be manufactured or fabricated are found in TM9-2815-220-20 series manuals.

Assembly Instructions. Detailed assembly instructions for items source coded to be assembled from component spare/repair parts are found in TM9-2815-220-20 series manuals. Items that make up the assembly are listed immediately following the assembly item entry or reference is made to an applicable figure.

Kits. Line item entries for repair parts kits appear as entries in the Repair Parts Kits and Sets work package where kit parts are listed as repair parts.

Index Numbers. Items which have the word BULK in the figure column will have an index number shown in the item number column. This index number is a cross-reference between the NSN / P/N Index work packages and the bulk material list in the repair parts work package.

Associated Publications. The publications listed below pertain to the M60 and M88 tanks and their components:

Publication	**Short Title**
TM5-5420-202 Series	Armored Vehicle Launched Bridge: M60A1 AVLB
TM9-2350-256 Series	Recovery Vehicle, Full Tracked: Medium, M88A1
TM9-2350-257 Series	Tank, Combat, Full Tracked: 105-MMGun, M60A1 (RISE)

Items In Parentheses. Item numbers appearing in parentheses, e.g., (8), signify components that are supplied only as part of the item having the same number or indicate continuation of an item.

Figure Assembly Part Number. The next higher assembly part number for component parts listed is shown in parentheses.

EXAMPLE: (ASSY P/N 12282020)

Change Page Information. An asterisk in the left-hand margin (before the item number) indicates a change has occurred in at least one of the columns for that item. Items that affect the index will appear in the supplemental index provided with the change.

Reference Designators. Items which have reference designators will have them listed in the Description Column following the item description/nomenclature. When more than one item is used at a particular location, the quantity will be shown in parentheses following the reference designator.

EXAMPLE: 2G1-17 (QTY 2)

HOW TO LOCATE REPAIR PARTS

1. When NSNs or P/Ns are Not Known.

First. Using the table of contents, determine the assembly group to which the item belongs. This is necessary since figures are prepared for assembly groups and subassembly groups, and listings are divided into the same groups.

Second. Find the figure covering the functional group or subfunctional group to which the item belongs.

Third. Identify the item on the figure and note the number(s).

Fourth. Look in the repair parts list work packages for the figure and item numbers. The NSNs and part numbers are on the same line as the associated item numbers.

2. When NSN Is Known.

First. If you have the NSN, look in the STOCK NUMBER column of the NSN index work package. The NSN is arranged in NIIN sequence. Note the figure and item number next to the NSN.

Second. Turn to the figure and item number. Verify that the item is the one you are looking for.

3. When P/N Is Known.

First. If you have the P/N and not the NSN, look in the PART NUMBER column of the P/N index work package. Identify the figure and item number.

Second. Look up the item on the figure in the applicable repair parts list work package.

ABBREVIATIONS

Abbreviations	Explanation
AWG	American Wire Gage
BN	Battalion
CO	Company
HQ	Headquarters
ID	Inside Diameter
IN	Inch
NO.	Number
SVC	Service
&	And

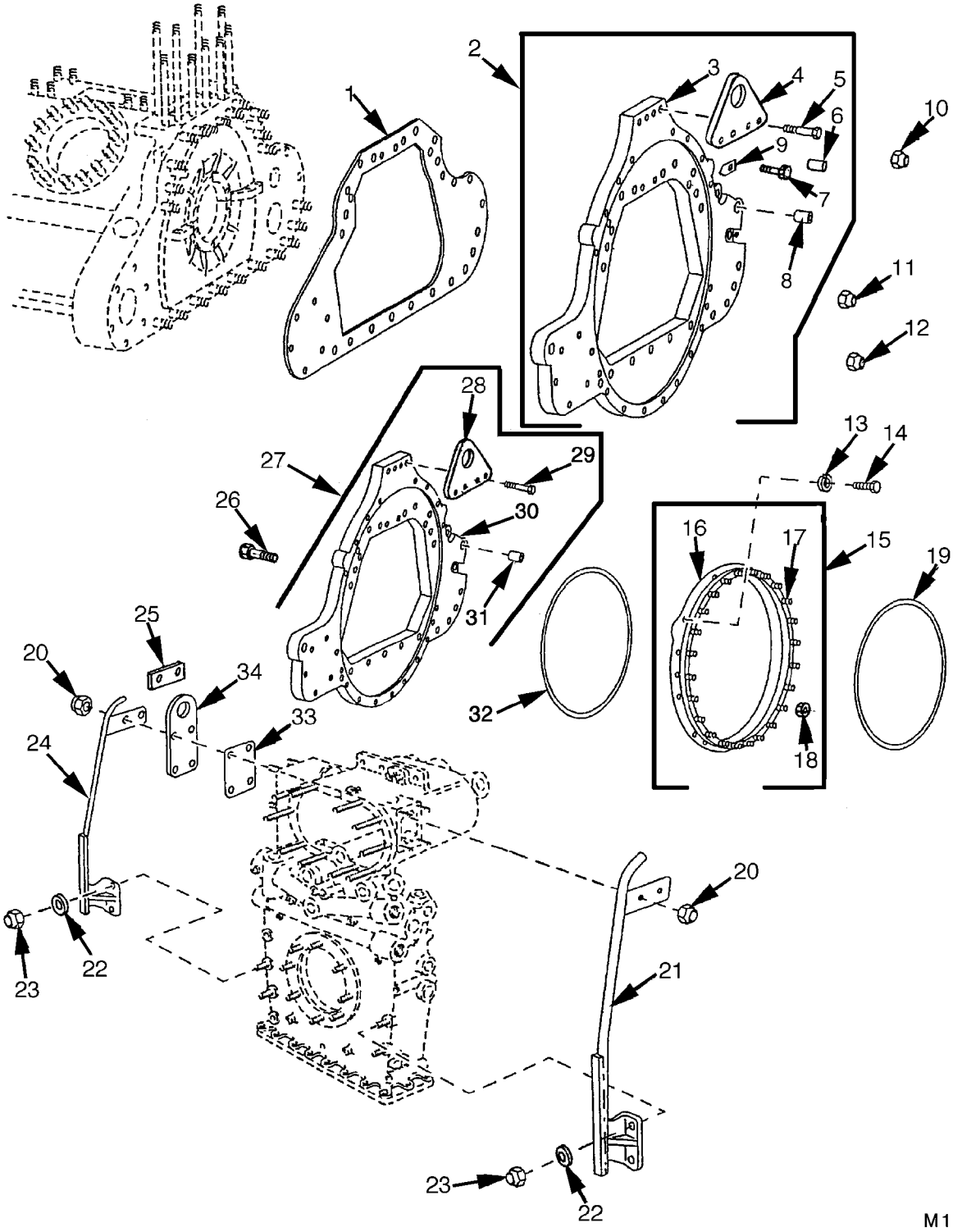

FIGURE 1. TRANSMISSION ADAPTERS, ENGINE LIFTING EYE INSTALLATION GUIDES AND ASSOCIATED PARTS

(1) ITEM NO.	(2) SMR CODE	(3) NSN	(4) CAGEC	(5) PART NUMBER	(6) DESCRIPTION AND USABLE ON CODES(UOC)	(7) QTY
					GROUP 01: ENGINE	
					GROUP 0100: ENGINE ASSEMBLY	
					FIG.1 TRANSMISSION ADAPTERS, ENGINE LIFTING EYE INSTALLATION GUIDES AND ASSOCIATED PARTS	
1	PAHZZ	5330-00-411-2513	19207	8682754	GASKET PART OF KIT P/N 5704488	1
2	PBHHH	2815-00-489-2575	19207	8682737	ADAPTOR,ASSEMBLY,CR UOC:2CA,2DA	1
3	PFHZZ	5365-00-232-6019	19207	8682736	.SPACER,RING UOC:2CA,2DA	1
4	PFHZZ	5342-00-318-7545	19207	8761080	.BRACKET,ENGINE ACCE UOC:2CA,2DA	1
5	PAHZZ	5305-00-719-5219	96906	MS90727-111	.SCREW,CAP,HEXAGON H UOC:2CA,2DA	4
6	PAHZZ	5315-00-753-9735	02978	502119	.PIN,STRAIGHT,HEADLE UOC:2CA,2DA	2
7	XAHZZ		19207	7415112	.BOLT,ENGINE,TIMING UOC:2CA,2DA	2
8	PAHZZ	5342-00-678-3532	19207	7320411	.MOUNT,RESILIENT UOC:2CA,2DA	2
9	PAHZZ	5355-00-776-7331	02978	302718	.POINTER,DIAL UOC:2CA,2DA	1
10	PAHZZ	5310-00-959-1488	81349	M45913/2-6FG5C	NUT,SELF-LOCKING,HE	2
11	PAHZZ	5310-00-088-0552	80205	MS21044N7	NUT,SELF-LOCKING,HE	4
12	PAHZZ	5310-00-062-4954	96906	MS21045-8	NUT,SELF-LOCKING,HE	15
13	PAFZZ	5310-00-209-0965	96906	MS35338-47	WASHER,LOCK UOC:EFR	17
14	PAFZZ	5305-00-709-8523	80204	B1821BH044F125N	SCREW,CAP,HEXAGON H UOC:EFR	17
15	PBFFF	5365-01-011-9026	19207	10912362	SPACER,RING UOC:EFR	1
16	XAFZZ		19207	10912362-1	.ADAPTER UOC:EFR	1
17	PAFZZ	5307-01-027-4732	19207	10898813	.STUD,PLAIN UOC:EFR	24
18	PAFZZ	5310-00-493-4020	96906	MS20500-720A	.NUT,SELF-LOCKING,HE UOC:EFR	2
19	PAFZZ	5330-00-291-1720	19207	7359808	SEAL,NONMETALLIC RO UOC:EFR	1
20	PAHZZ	5310-00-959-1488	81349	M45913/2-6FG5C	NUT,SELF-LOCKING,HE	8
21	PBHZZ	5340-00-397-3271	19207	11684009	BRACKET,MOUNTING RIGHT BANK UOC:2CA,2DA	1
22	PAHZZ	5310-00-333-7348	19207	8679576	WASHER,FLAT UOC:2CA,2DA	4
23	PAHZZ	5310-00-950-0039	80205	MS21044N6	NUT,SELF-LOCKING,HE UOC:2CA,2DA	4
24	PBHZZ	5340-00-397-3269	19207	11684008	BRACKET,MOUNTING LEFT BANK UOC:2CA,2DA	1
25	PBHZZ	5365-01-047-9404	19207	12254297	SPACER,PLATE UOC:EFR	2
26	PAFZZ	5305-00-060-9431	96906	MS35292-93	SCREW, CAP, HEXAGON UOC:EFR	2
27	AHHHH		19207	8682737-1	ADAPTER ASSEMBLY,CR UOC:EFR	1
28	PBHZZ	5342-00-318-7545	19207	8761080	.BRACKET,ENGINE ACCE UOC:EFR	1
29	PBHZZ	5305-00-719-5219	96906	MS90727-111	.SCREW,CAP,HEXAGON H UOC:EFR	4
30	PBHZZ	5365-00-232-6019	19207	8682736	.SPACER,RING UOC:EFR	1

(1) ITEM NO.	(2) SMR CODE	(3) NSN	(4) CAGEC	(5) PART NUMBER	(6) DESCRIPTION AND USABLE ON CODES(UOC)	(7) QTY
31	PAHZZ	5342-00-678-3532	19207	7320411	.MOUNT,RESILIENT . . . . . UOC:EFR	2
32	PAFZZ	5331-00-772-3892	19207	7723892	O-RING. . . . . UOC:EFR	1
33	PAHZZ	5330-00-899-1504	19207	10898933	GASKET LEFT BANK PART OF KIT P/N 5704488	1
34	PBHZZ	2815-00-230-3593	19207	8761295	EYE,LIFTING,ENGINE	2

END OF FIGURE

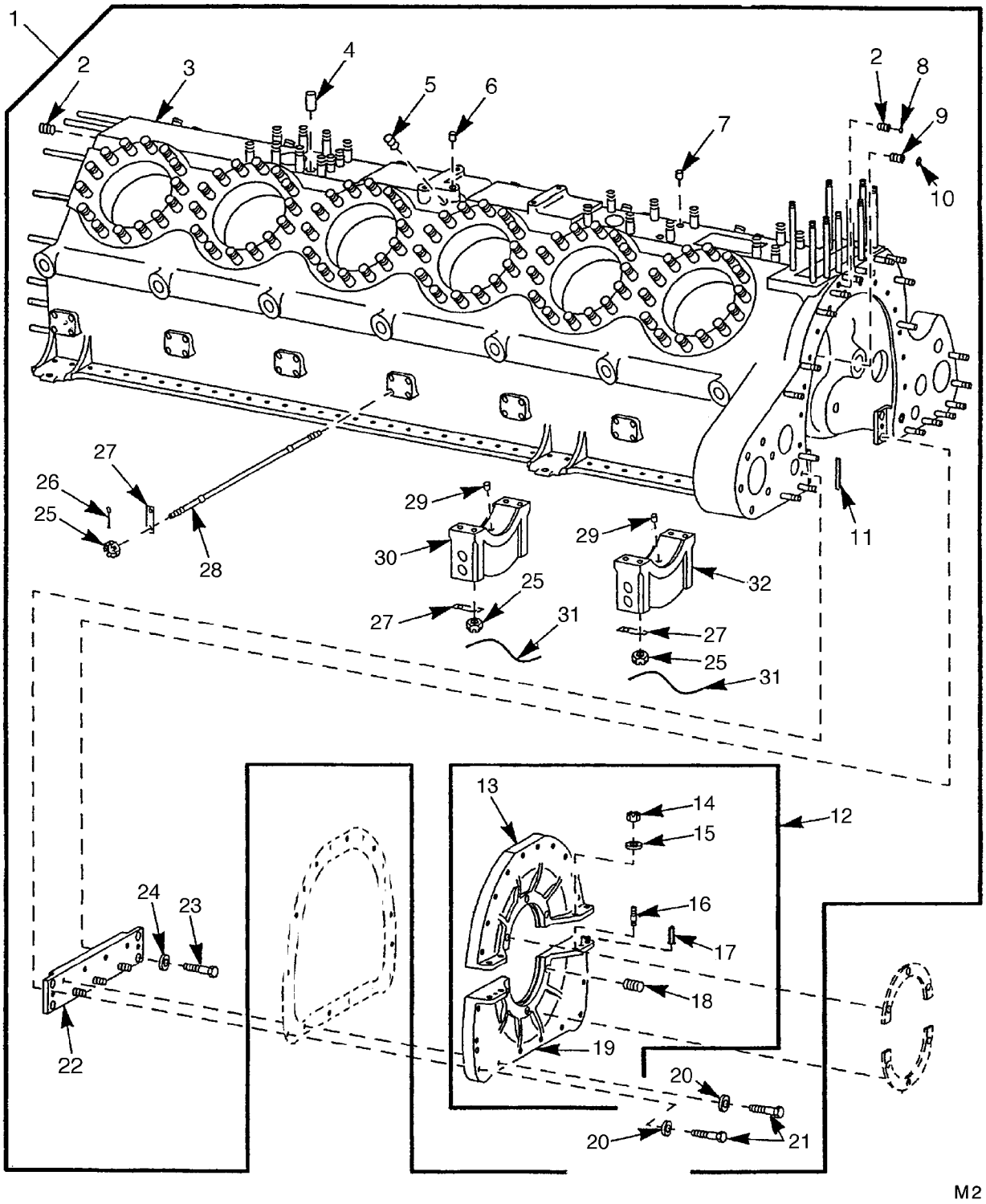

FIGURE 2. ENGINE BLOCK

(1) ITEM NO.	(2) SMR CODE	(3) NSN	(4) CAGEC	(5) PART NUMBER	(6) DESCRIPTION AND USABLE ON CODES(UOC)	(7) QTY
					GROUP 0101: CRANKCASE,BLOCK, CYLINDER HEAD	
					FIG.2 ENGINE BLOCK	
1	PAHHD	2815-00-394-9729	19207	11684108	ENGINE BLOCK,DIESEL	1
2	PAHZZ	4730-01-132-1422	19207	7767337	.PLUG,PIPE	3
3	XAHZZ		19207	11684087	.ENGINE,BLOCK	1
4	PAHZZ	4710-01-248-9634	19207	8682469	.TUBE,METALLIC	1
5	PAHZZ	4730-00-044-4699	24617	444699	.PLUG,PIPE	1
6	PFHZZ	3120-00-493-9192	19207	8682512	.BUSHING,SLEEVE	1
7	XAHZZ		19207	8682513	.TUBE	3
8	PAHZZ	5340-00-177-4213	96906	MS9380-17	.PLUG,EXPANSION	1
9	PAHZZ	4730-00-278-2966	96906	MS27769C6	.PLUG,PIPE	4
10	PAHZZ	5340-00-490-0872	19207	8725236	.PLUG,EXPANSION	5
11	PAHZZ	5330-00-292-7363	19207	7416751	.PACKING MATERIAL PART OF KIT P/N 5704488	V
12	XAHHH		19207	8725144	.HOUSING ASSEMBLY	1
13	XAHZZ		19207	8725146	..CAP	1
14	PAHZZ	5310-00-982-4912	96906	MS21045-5	..NUT,SELF-LOCKING,HE	2
15	PAHZZ	5310-00-167-0820	80205	NAS1149F0563P	..WASHER,FLAT	4
16	PAHZZ	5307-00-272-6331	19207	8365809	..STUD,PLAIN .003 OVERSIZE	4
16	PAHZZ	5307-00-272-6332	19207	8365810	..STUD,PLAIN .007 OVERSIZE	4
17	PAHZZ	5315-00-058-9929	21450	589929	..PIN,STRAIGHT,HEADLE	2
18	PAHZZ	5325-01-073-2809	96906	MS21209F5-15	..INSERT,SCREW THREAD	6
19	XAHZZ		19207	8725145	..HOUSING	1
20	PAHZZ	5310-00-167-0820	80205	NAS1149F0563P	.WASHER,FLAT	20
21	PAHZZ	5306-00-225-9089	80205	MS90726-34	.BOLT,MACHINE	20
22	XAHZZ		19207	8725181	.SUPPORT,CRANKSHAFT	1
23	PAHZZ	5305-00-709-8283	96906	MS90727-84	.SCREW,CAP,HEXAGON H	4
24	PAHZZ	5310-01-391-7138	80205	NAS1149F0763P	.WASHER,FLAT	4
25	PAHZZ	5310-00-720-7627	19207	8761279	.NUT,PLAIN,SLOTTED,H	56
26	PAHZZ	5315-00-234-1864	80205	MS24665-302	.PIN,COTTER	28
27	XAHZZ		19207	8725170	.WASHER,FLAT	28
28	PAHZZ	2815-00-678-3227	19207	8725254	.TIE ROD,ENGINE CRAN	14
29	PFHZZ	5315-00-238-9239	19207	8725256	.PIN,STRAIGHT,HEADED	7
30	XAHZZ		19207	7320476	.CAP,BEARING	1
31	MHHZZ		96906	MS20995NC40-12	.WIRE,NONELECTRICAL (MAKE FROM WIRE,NONELECTRICAL P/N NASM20995NC40)	14
32	XAHZZ		19207	8725141	.CAP,BEARING	6

END OF FIGURE

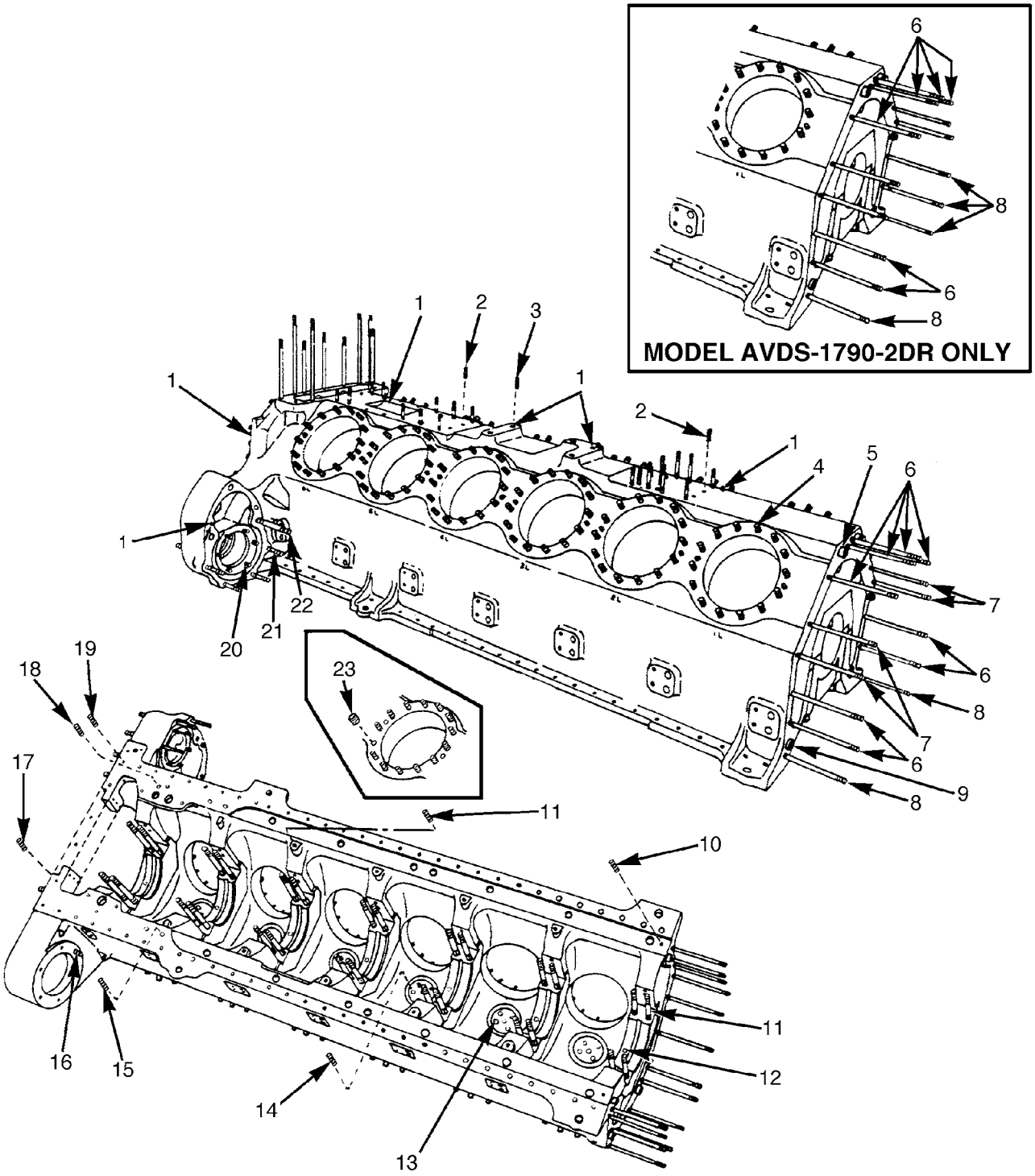

FIGURE 3. CRANKCASE AND CRANKSHAFT STUDS

(1) ITEM NO.	(2) SMR CODE	(3) NSN	(4) CAGEC	(5) PART NUMBER	(6) DESCRIPTION AND USABLE ON CODES(UOC)	(7) QTY
					GROUP 0101: CRANKCASE,BLOCK, CYLINDER HEAD	
					FIG.3 CRANKCASE AND CRANKSHAFT STUDS	
1	PAHZZ	5315-00-058-9929	21450	589929	PIN,STRAIGHT,HEADLE	8
2	PAHZZ	5325-00-678-3311	96906	MS21209F6-20	INSERT,SCREW THREAD	8
3	PAHZZ	5325-00-678-3309	19207	8352636	INSERT,SCREW THREAD	4
4	PAHZZ	5307-01-024-7109	19207	7044067	STUD,PLAIN STANDARD	168
4	PAHZZ	5307-00-678-3536	19207	7044068	STUD,PLAIN .003 OVERSIZE	168
4	PAHZZ	5307-00-678-3535	19207	7044069	STUD,PLAIN .007 OVERSIZE	168
5	XAHZZ		19207	11684073-2	TUBE,OIL TRANSFER	3
6	PAHZZ	5307-01-013-7889	19207	7348529-2	STUD,PLAIN .003 OVERSIZE UOC:2CA,2DA	8
6	PAHZZ	5307-01-013-7889	19207	7348529-2	STUD,PLAIN .003 OVERSIZE UOC:EFR	6
6	PAHZZ	5307-01-013-7890	19207	7348529-3	STUD,PLAIN .007 OVERSIZE UOC:2CA,2DA	8
6	PAHZZ	5307-01-013-7890	19207	7348529-3	STUD,PLAIN .007 OVERSIZE UOC:EFR	6
7	PAHZZ	5307-01-014-1254	19207	7348529-6	STUD,PLAIN .003 OVERSIZE	4
7	PAHZZ	5307-01-014-1255	19207	7348529-7	STUD,PLAIN .007 OVERSIZE	4
8	PAHZZ	5307-00-678-3528	19207	7992653	STUD,PLAIN .003 OVERSIZE UOC:2CA,2DA	2
8	PAHZZ	5307-00-678-3528	19207	7992653	STUD,PLAIN .003 OVERSIZE UOC:EFR	4
8	PAHZZ	5307-00-678-3527	19207	7992654	STUD,PLAIN .007 OVERSIZE UOC:2CA,2DA	2
8	PAHZZ	5307-00-678-3527	19207	7992654	STUD,PLAIN .007 OVERSIZE UOC:EFR	4
9	XAHZZ		19207	11684090	TUBE,OIL TRANSFER	2
10	PAHZZ	5325-00-291-3495	96906	MS124697	INSERT,SCREW THREAD	4
11	PFHZZ	5307-00-678-3228	19207	8725140	STUD,SHOULDERED STANDARD	28
11	PFHZZ	5307-00-410-5830	19207	10882970	STUD,SHOULDERED .010 OVERSIZE	28
12	XAHZZ		19207	8725238	PIN	7
13	PAHZZ	5307-00-734-8782	19207	7348782	STUD,PLAIN .003 OVERSIZE	12
13	PAHZZ	5307-00-734-8783	19207	7348783	STUD,PLAIN .007 OVERSIZE	12
14	PAHZZ	5315-00-823-8682	96906	MS16555-25	PIN,STRAIGHT,HEADLE	6
15	PAHZZ	5325-01-073-2809	96906	MS21209F5-15	INSERT,SCREW THREAD	4
16	PAHZZ	5307-00-734-8797	19207	7348797	STUD,PLAIN .003 OVERSIZE	1
16	PAHZZ	5307-00-734-8798	19207	7348798	STUD,PLAIN .007 OVERSIZE	1
17	PAHZZ	5325-01-031-4286	96906	MS124738	INSERT,SCREW THREAD	4
18	PAHZZ	5325-00-678-3311	96906	MS21209F6-20	INSERT,SCREW THREAD	6
19	PAHZZ	5325-00-291-3492	96906	MS124698	INSERT,SCREW THREAD	4
20	PAHZZ	5307-01-521-0059	19207	7084527	STUD,PLAIN .003 OVERSIZE	6
20	PAHZZ	5307-01-520-8117	19207	7084528	STUD,PLAIN .007 OVERSIZE	6
21	PAHZZ	5307-00-678-3526	19207	7992657	STUD,PLAIN .003 OVERSIZE	4
21	PAHZZ	5307-00-678-3525	19207	7992658	STUD,PLAIN .007 OVERSIZE	4
22	PAHZZ	5307-00-678-3510	19207	8682500	STUD,PLAIN .003 OVERSIZE	1
22	PAHZZ	5307-00-678-3509	19207	8682501	STUD,PLAIN .007 OVERSIZE	1
23	PAHZZ	5325-00-990-7158	96906	MS122165	INSERT,SCREW THREAD	V

END OF FIGURE

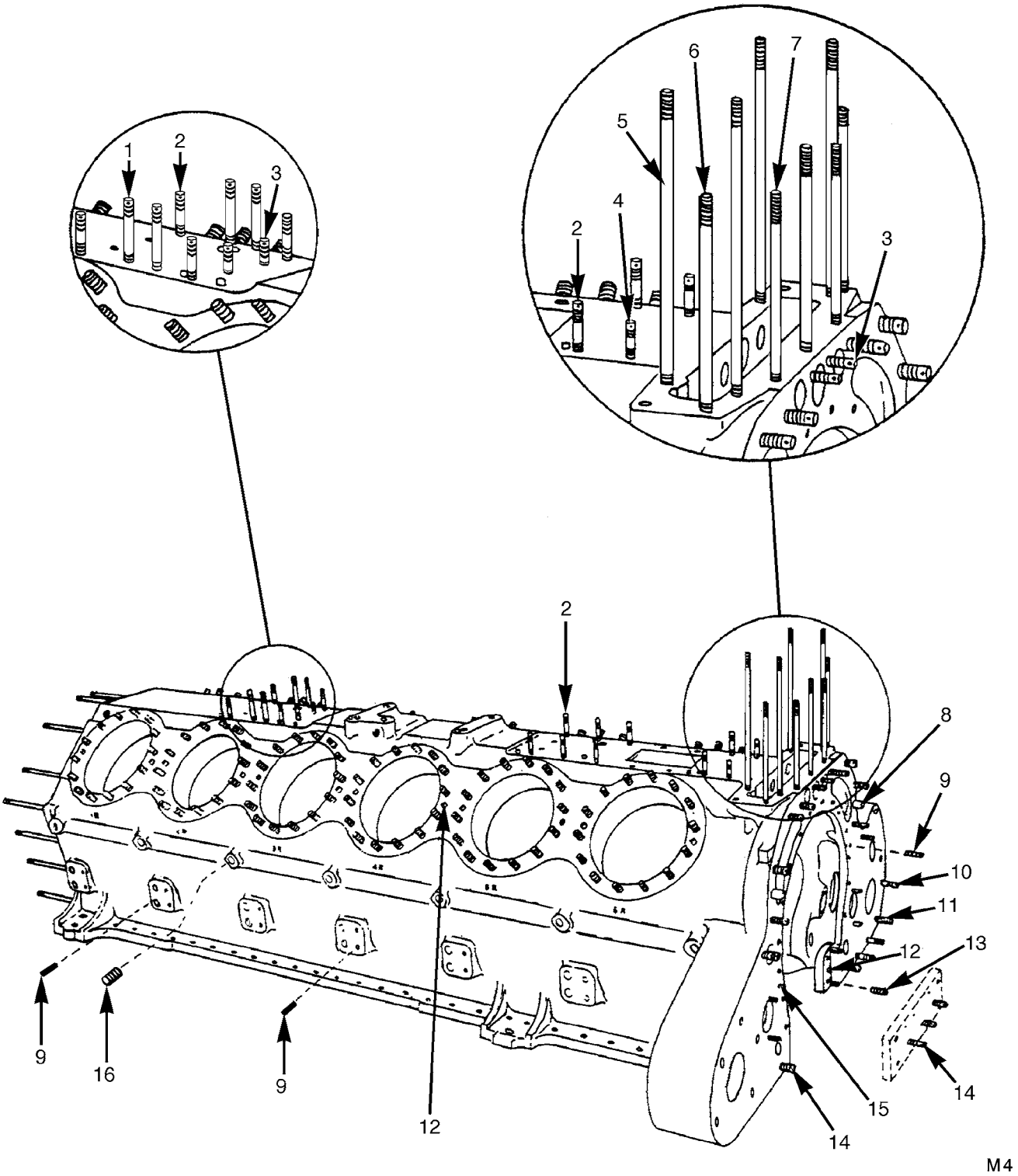

FIGURE 4. CRANKCASE AND DRIVE STUDS

(1) ITEM NO.	(2) SMR CODE	(3) NSN	(4) CAGEC	(5) PART NUMBER	(6) DESCRIPTION AND USABLE ON CODES(UOC)	(7) QTY
					GROUP 0101: CRANKCASE,BLOCK,CYLINDER HEAD	
					FIG.4 CRANKCASE AND DRIVE STUDS	
1	PAHZZ	5307-00-678-3516	19207	7992693	STUD,PLAIN .003 OVERSIZE	4
1	PAHZZ	5307-00-678-3515	19207	7992694	STUD,PLAIN .007 OVERSIZE	4
2	PAHZZ	5307-00-678-3530	19207	7992645	STUD,PLAIN .003 OVERSIZE	12
2	PAHZZ	5307-00-678-3529	19207	7992646	STUD,PLAIN .007 OVERSIZE	12
3	PAHZZ	5307-00-734-8803	19207	7348803	STUD,PLAIN .003 OVERSIZE	4
3	PAHZZ	5307-00-734-8804	19207	7348804	STUD,PLAIN .007 OVERSIZE	4
4	PAHZZ	5307-00-678-3524	19207	7992669	STUD,PLAIN .003 OVERSIZE	2
4	PAHZZ	5307-00-678-3523	19207	7992670	STUD,PLAIN .007 OVERSIZE	2
5	PAHZZ	5307-00-678-3518	19207	7992685	STUD,PLAIN .003 OVERSIZE	4
5	PAHZZ	5307-00-678-3517	19207	7992686	STUD,PLAIN .007 OVERSIZE	4
6	PAHZZ	5307-00-678-3520	19207	7992681	STUD,PLAIN .003 OVERSIZE	3
6	PAHZZ	5307-00-678-3519	19207	7992682	STUD,PLAIN .007 OVERSIZE	3
7	PAHZZ	5307-00-678-3522	19207	7992677	STUD,PLAIN .003 OVERSIZE	2
7	PAHZZ	5307-00-678-3521	19207	7992678	STUD,PLAIN .007 OVERSIZE	2
8	XAHZZ		19207	7053981	PIN,STRAIGHT	2
9	PAHZZ	5325-01-073-2809	96906	MS21209F5-15	INSERT,SCREW THREAD	45
10	PAHZZ	5307-00-841-6477	02978	401876H	STUD,PLAIN .003 OVERSIZE	4
10	PAHZZ	5307-00-727-4938	19207	7767340	STUD,PLAIN .007 OVERSIZE	4
11	PAHZZ	5307-00-734-8782	19207	7348782	STUD,PLAIN .003 OVERSIZE	4
11	PAHZZ	5307-00-734-8783	19207	7348783	STUD,PLAIN .007 OVERSIZE	4
12	XAHZZ		19207	7416591	PIN,STRAIGHT	26
13	PAHZZ	5325-00-634-7860	96906	MS124699	INSERT,SCREW THREAD	4
14	PAHZZ	5307-00-678-3514	19207	7992697	STUD,PLAIN .003 OVERSIZE	15
14	PAHZZ	5307-00-678-3513	19207	7992698	STUD,PLAIN .007 OVERSIZE	15
15	PAHZZ	5315-00-058-9929	21450	589929	PIN,STRAIGHT,HEADLE	2
16	PAHZZ	4730-00-044-4699	24617	444699	PLUG,PIPE UOC:2CA,2DA	5
16	PAHZZ	4730-00-044-4699	24617	444699	PLUG,PIPE UOC:EFR	6

END OF FIGURE

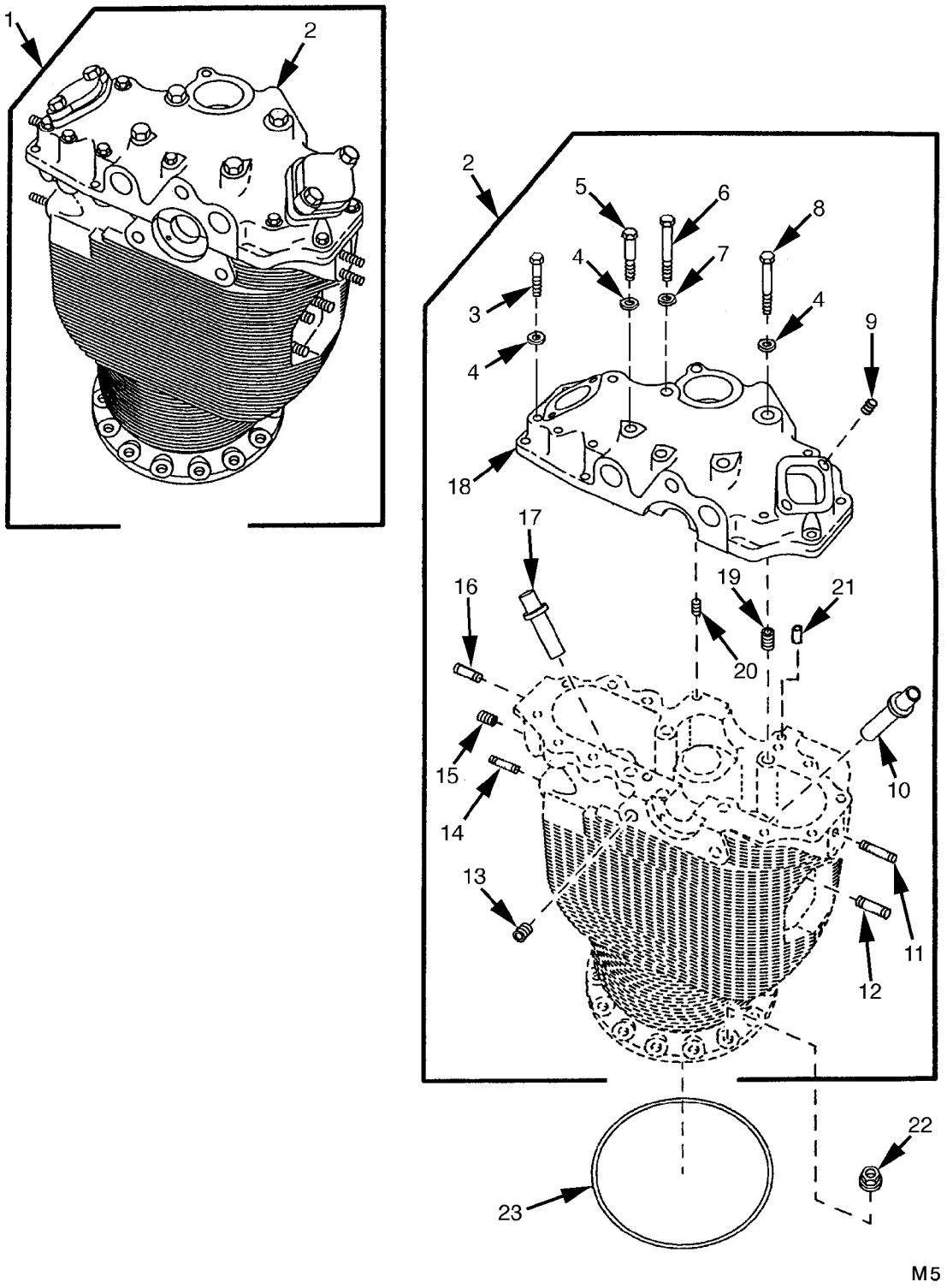

FIGURE 5. CYLINDER HEAD ASSEMBLY

(1) ITEM NO.	(2) SMR CODE	(3) NSN	(4) CAGEC	(5) PART NUMBER	(6) DESCRIPTION AND USABLE ON CODES(UOC)	(7) QTY
					GROUP 0101: CRANKCASE,BLOCK,CYLINDER HEAD	
					FIG.5 CYLINDER HEAD ASSEMBLY	
1	PAHHD	2815-00-150-7405	19207	10951304	CYLINDER HEAD,DIESE STANDARD	12
1	PADDD	2815-00-213-0834	19207	10951304-1	CYLINDER HEAD,DIESE .010 OVERSIZE	V
1	PADDD	2815-00-213-0835	19207	10951304-2	CYLINDER HEAD,DIESE .020 OVERSIZE	V
1	PADDD	2815-00-213-0836	19207	10951304-3	CYLINDER HEAD,DIESE .030 OVERSIZE	V
1	PADDD	2815-00-213-0837	19207	10951304-4	CYLINDER HEAD,DIESE .040 OVERSIZE	V
2	XAHHH		19207	10951221	.CYLINDER HEAD STANDARD	1
2	XAHHH		19207	10951221-1	.CYLINDER AND HEAD .010 OVERSIZE	1
2	XAHHH		19207	10951221-2	.CYLINDER AND HEAD .020 OVERSIZE	1
2	XAHHH		19207	10951221-3	.CYLINDER AND HEAD .030 OVERSIZE	1
2	XAHHH		19207	10951221-4	.CYLINDER AND HEAD .040 OVERSIZE	1
3	PAFZZ	5305-00-225-9092	96906	MS90726-37	..SCREW,CAP,HEXAGON H	4
4	PAFZZ	5310-00-167-0820	80205	NAS1149F0563P	..WASHER,FLAT	4
5	PAFZZ	5306-01-510-4289	19207	7415118	..BOLT,MACHINE	7
6	PAFZZ	5306-00-678-3316	19207	7320407	..BOLT,MACHINE	4
7	PAFZZ	5330-00-814-6675	25184	1103-8	..PACKING WITH RETAIN PART OF KIT P/N 5704488	4
8	PAFZZ	5306-00-051-4087	80204	B1821BH031F325N	..BOLT,MACHINE	1
9	PAHZZ	5325-00-678-3311	19207	8352634	..INSERT,SCREW THREAD	4
10	PAHZZ	2815-00-678-3203	02978	8725003	..GUIDE,VALVE STEM STANDARD	1
10	PAHZZ	2815-00-678-3201	02978	8725176	..GUIDE,VALVE STEM .010 OVERSIZE	1
10	PAHZZ	2815-00-678-3200	19207	8725177	..GUIDE,ENGINE POPPET .020 OVERSIZE	1
11	PAFZZ	5307-00-776-7804	19207	7767804	..STUD,PLAIN .003 OVERSIZE	2
11	PAFZZ	5307-00-776-7805	19207	7767805	..STUD,PLAIN .007 OVERSIZE	2
12	PAFZZ	5307-00-678-3314	19207	8725298	..STUD,PLAIN STANDARD	4
13	PAHZZ	5325-00-678-3310	19207	8352635	..INSERT,SCREW THREAD	6
14	PAFZZ	5307-00-774-4555	19207	7744555	..STUD,PLAIN .007 OVERSIZE	3
14	PAFZZ	5307-00-774-4803	19207	7744803	..STUD,PLAIN .003 OVERSIZE	3
15	PAHZZ	5325-00-291-3488	96906	MS124700	..INSERT,SCREW THREAD	1
16	PFFZZ	5307-00-084-0629	19207	7403138-6	..STUD,PLAIN .003 OVERSIZE	1
16	PFFZZ	5307-00-084-0628	19207	7403138-7	..STUD,PLAIN .007 OVERSIZE	1
17	PAHZZ	2815-00-678-3202	R1120	8725004	..GUIDE,VALVE STEM STANDARD	1
17	PAHZZ	2815-00-678-3199	02978	8725179	..GUIDE,VALVE STEM .010 OVERSIZE	1
17	PAHZZ	2815-00-678-3198	19207	8725180	..GUIDE,VALVE STEM .020 OVERSIZE	1
18	XAFHH		19207	7320420	..COVER	1
19	PAHZZ	5325-00-678-3311	19207	8352634	..INSERT,SCREW THREAD	4
20	PAHZZ	5325-00-582-7256	96906	MS21209F5-20	..INSERT,SCREW THREAD	12
21	PAHZZ	5315-00-058-9920	21450	589920	..PIN,STRAIGHT,HEADLE	2
22	PAHZZ	5310-00-168-2906	19207	11640861-1	NUT,PLAIN,EXTENDED	168
23	PAHZZ	5330-00-954-2740	96906	MS29561-256	O-RING PART OF KIT P/N 5704488	12

END OF FIGURE

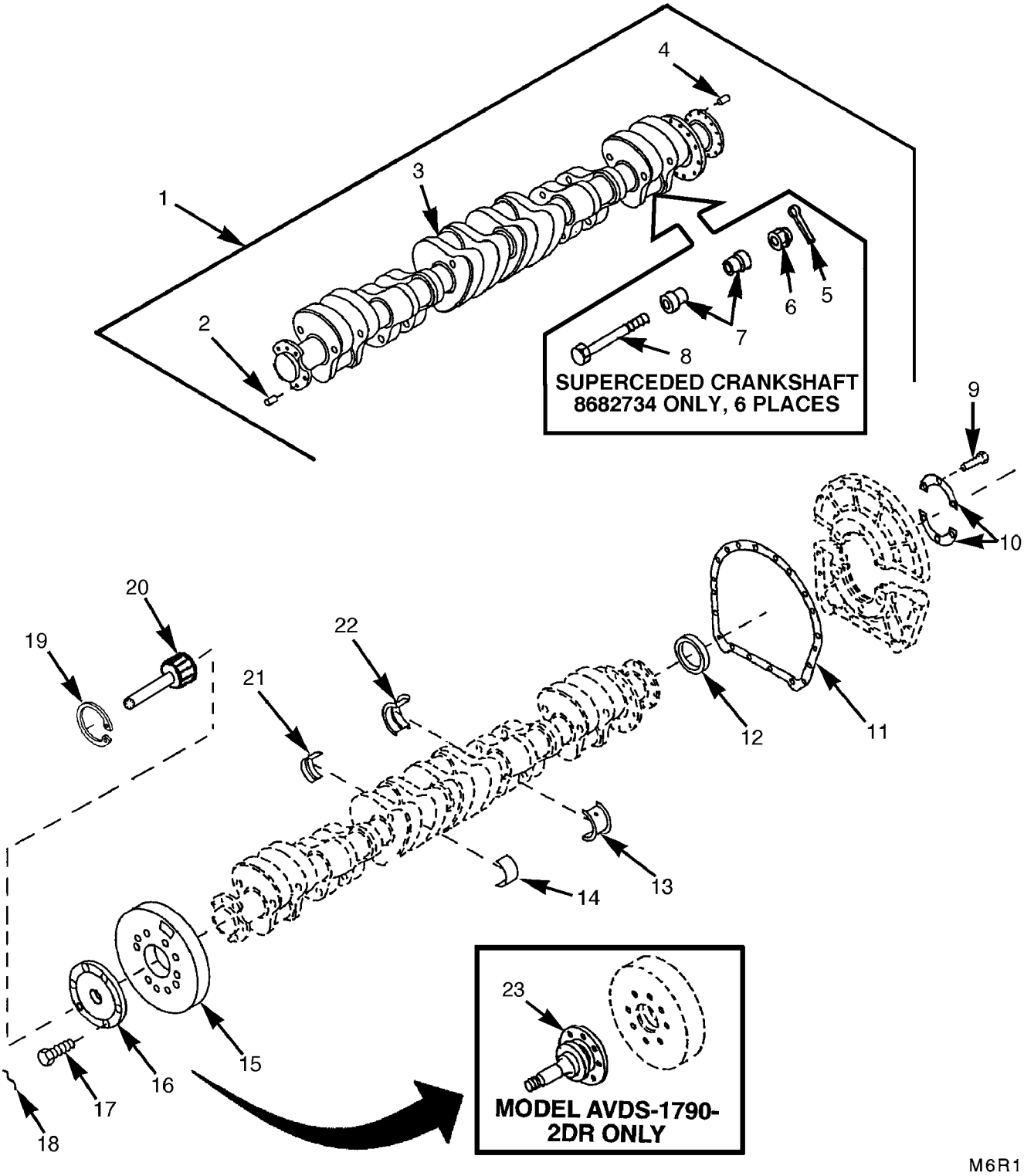

FIGURE 6. CRANKSHAFT ASSEMBLY AND BEARINGS

(1) ITEM NO.	(2) SMR CODE	(3) NSN	(4) CAGEC	(5) PART NUMBER	(6) DESCRIPTION AND USABLE ON CODES(UOC)	(7) QTY
					GROUP 0102: CRANKSHAFT	
					FIG.6 CRANKSHAFT ASSEMBLY AND BEARINGS	
1	PAHDD	2815-01-233-9709	19207	12254249	CRANKSHAFT,ENGINE	1
2	PAHZZ	5315-00-776-7363	19207	7767363	.PIN,STRAIGHT,HEADLE	1
3	XAHZZ		19207	12254238	.CRANKSHAFT	1
4	PAFZZ	5315-00-141-6337	19207	8717298	.PIN,GROOVED,HEADLES .005 OVERSIZE.	2
4	PAFZZ	5315-00-141-6338	19207	8717299	.PIN,GROOVED,HEADLES .010 OVERSIZE.	2
5	PAHZZ	5315-00-842-3044	80205	MS24665-283	.PIN,COTTER.	5
6	PAHZZ	5310-00-842-1488	96906	MS35692-21	.NUT,PLAIN,SLOTTED,H	6
7	XAHZZ		19207	10865183	.PLUG	12
8	PFHZZ	5306-00-406-1542	19207	10865184	.BOLT,MACHINE	6
9	PAHZZ	5306-00-225-9086	96906	MS90726-31	BOLT,MACHINE	6
10	PBHZZ	5340-00-238-9191	19207	8725184	PLATE,RETAINING,SEA.	2
11	PAHZZ	5330-01-324-7207	19207	8725273	GASKET PART OF KIT P/N 5704488	1
12	PAHZZ	5330-01-229-3452	01212	7234-S	SEAL,PLAIN PART OF KIT P/N 5704488..	1
13	KFHZZ		19207	8724996	BEARING,HALF,SLEEVE STANDARD PART OF KIT P/N 5702616 PART OF KIT P/N 5704381	1
13	KFHZZ		19207	8724996-1	BEARING HALF,SLEEVE .003 UNDERSIZE PART OF KIT P/N 5704348 PART OF KIT P/N 5704382.	1
13	KFHZZ		19207	8761331	BEARING HALF,SLEEVE .010 UNDERSIZE PART OF KIT P/N 5702617 PART OF KIT P/N 5704383.	1
14	KFHZZ		19207	8724987	BEARING,HALF,SLEEVE STANDARD PART OF KIT P/N 5702616	6
14	KFHZZ		19207	8724987-1	BEARING HALF,SLEEVE .003 UNDERSIZE PART OF KIT P/N 5704348.	6
14	KFHZZ		19207	8761329	BEARING HALF,SLEEVE .010 UNDERSIZE PART OF KIT P/N 5702617.	6
15	PAHZZ	2815-01-298-1128	63946	5654225	DAMPENER,VIBRATION,	1
16	PBHZZ	5342-00-795-1800	19207	10882610	BRACKET,ENGINE ACCE UOC:2CA,2DA	1
17	PAFZZ	5306-00-817-6131	19207	596281	BOLT,MACHINE	6
18	MHHZZ		96906	MS20995NC40-16	WIRE,NONELECTRICAL (MAKE FROM WIRE, NONELECTRICAL P/N NASM20995NC40)	3
19	PAHZZ	5325-00-801-2500	96906	MS16625-1112	RING,RETAINING UOC:2CA,2DA	1
20	PAHZZ	3020-00-817-9538	19207	10882613	GEAR,SPUR UOC:2CA,2DA	1
21	KFHZZ		19207	8724986	BEARING,HALF,SLEEVE STANDARD PART OF KIT P/N 5702616	6
21	KFHZZ		19207	8724986-1	BEARING HALF,SLEEVE .003 UNDERSIZE PART OF KIT P/N 5704348.	6
21	KFHZZ		19207	8761328	BEARING HALF, SLEEV .010 UNDERSIZE PART OF KIT P/N 5702617.	6
22	KFHZZ		19207	8724995	BEARING,HALF,SLEEVE STANDARD PART OF KIT P/N 5702616 PART OF KIT P/N 5704381	1
22	KFHZZ		19207	8724995-1	BEARING HALF,SLEEVE .003 UNDERSIZE PART OF KIT P/N 5704348 PART OF KIT P/N 5704382.	2
22	KFHZZ		19207	8761330	BEARING HALF,SLEEVE .010 UNDERSIZE PART OF KIT P/N 5702617 PART OF KIT P/N 5704383.	1
23	KFFZZ		19207	12275793	GEARSHAFT,SPUR PART OF KIT P/N 5705063 UOC:EFR	1

END OF FIGURE

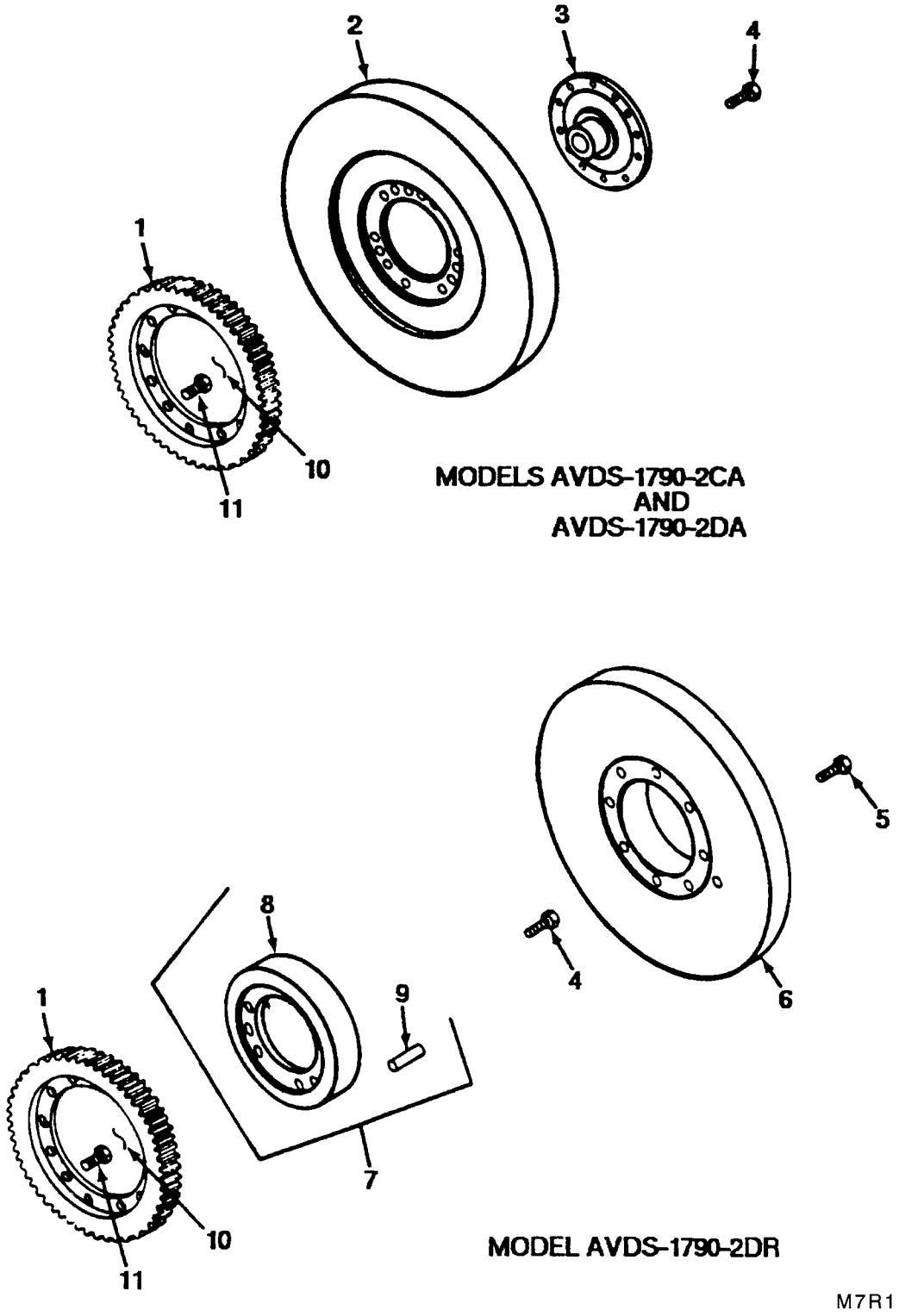

FIGURE 7. FLYWHEEL AND ASSOCIATED PARTS

(1) ITEM NO.	(2) SMR CODE	(3) NSN	(4) CAGEC	(5) PART NUMBER	(6) DESCRIPTION AND USABLE ON CODES(UOC)	(7) QTY
					GROUP 0103: FLYWHEEL ASSEMBLY	
					FIG.7 FLYWHEEL AND ASSOCIATED PARTS	
1	PAHZZ	3020-00-861-3829	19207	10898778	GEAR,SPUR	1
2	PAFZZ	2815-00-404-7444	19207	10912453	FLYWHEEL,ENGINE UOC:2CA,2DA	1
3	PAFZZ	3020-01-290-1298	19207	8725260	GEAR,SPUR UOC:2CA,2DA	1
4	PAFZZ	5306-00-206-3850	02978	520864	BOLT,MACHINE	9
5	PAFZZ	5306-00-817-6131	19207	596281	BOLT,MACHINE UOC:EFR	8
6	PBFZZ	2815-01-024-9293	19207	11682645	FLYWHEEL,ENGINE UOC:EFR	1
7	PBFFF	2990-01-011-2665	19207	11684197	ADAPTER,FLYWHEEL HO UOC:EFR	1
8	PBFZZ	2990-00-563-6905	19207	11682677	.ADAPTER,FLYWHEEL HO UOC:EFR	1
9	PAFZZ	5315-00-776-7363	19207	7767363	.PIN,STRAIGHT,HEADLE UOC:EFR	1
10	MHHZZ		96906	MS20995NC40-12	WIRE,NONELECTRICAL (MAKE FROM WIRE, NONELECTRICAL P/N NASM20995NC40)	V
11	PAHZZ	5306-01-510-4254	19207	7340059	BOLT,MACHINE	12

END OF FIGURE

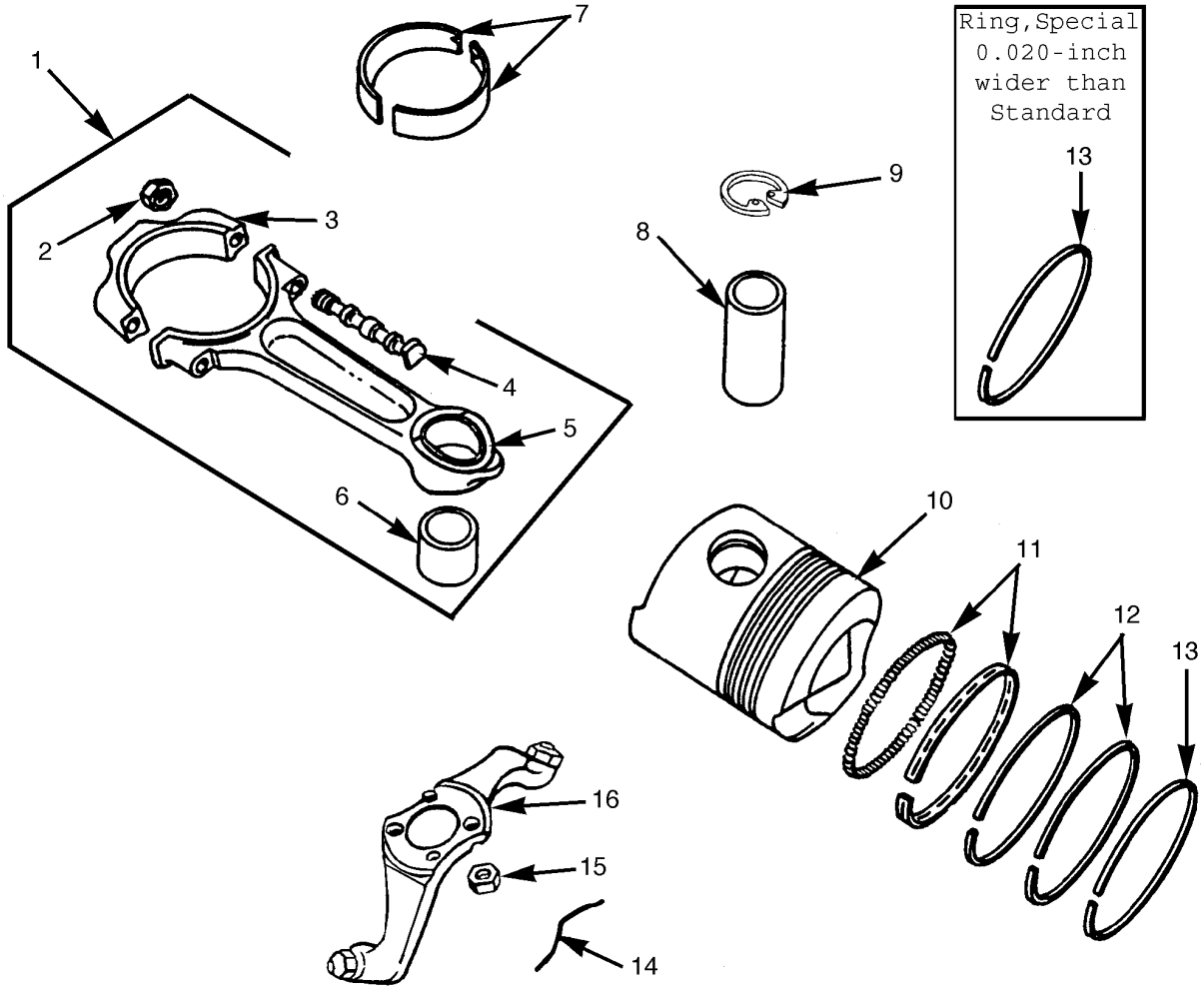

FIGURE 8. PISTONS, RINGS, CONNECTING RODS, AND OIL SPRAYERS

(1) ITEM NO.	(2) SMR CODE	(3) NSN	(4) CAGEC	(5) PART NUMBER	(6) DESCRIPTION AND USABLE ON CODES(UOC)	(7) QTY
					GROUP 0104: PISTONS,CONNECTING RODS	
					FIG.8 PISTONS, RINGS, CONNECTING ROD, AND OIL SPRAYER	
1	PBHHH	2815-00-394-9702	19207	11683934	CONNECTING ROD,PIST	12
2	PAHZZ	5310-00-486-0399	19207	11683948	.NUT,PLAIN,HEXAGON	2
3	XAHZZ		19207	11683932	.CAP	1
4	PAHZZ	5306-00-486-0402	19207	11683930	.BOLT,EXTERNALLY REL	2
5	XAHZZ		19207	11683933	.ROD	1
6	PAHZZ	3120-00-423-4100	19207	11683947	.BEARING,SLEEVE	1
7	KFHZZ		19207	11683972	BEARING HALF,SLEEVE STANDARD PART OF KIT P/N 5704482	24
7	KFHZZ		19207	11683972-1	BEARING HALF,SLEEVE .003 UNDERSIZE PART OF KIT P/N 5704483	24
7	KFHZZ		19207	11683972-2	BEARING HALF,SLEEVE .010 UNDERSIZE PART OF KIT P/N 5704484	24
8	PAHZZ	2815-00-467-3407	19207	11683935	PIN,PISTON	12
9	PAHZZ	5325-00-202-0194	96906	MS16625-3212	RING,RETAINING	24
10	PAHZZ	2815-00-397-3316	19207	11683943	PISTON,INTERNAL COM STANDARD	12
10	PADZZ	2815-00-427-0551	19207	11683943-1	PISTON,INTERNAL COM .010 OVERSIZE	12
10	PADZZ	2815-00-434-6593	19207	11683943-2	PISTON,INTERNAL COM .020 OVERSIZE	12
10	PADZZ	2815-00-427-0553	19207	11683943-3	PISTON,INTERNAL COM .030 OVERSIZE	12
10	PADZA	2815-00-434-6594	19207	11683943-4	PISTON,INTERNAL COM .040 OVERSIZE	12
11	KFHZZ		19207	11668315	RING, PISTON STANDARD PART OF KITS P/N 5704475 and F1682-80	12
11	KDDZZ		19207	11668315-1	RING, PISTON .010 OVERSIZE PART OF KIT P/N 5705284 PART OF KIT P/N 5704476	12
11	KDDZZ		19207	11668315-2	RING, PISTON .020 OVERSIZE PART OF KIT P/N 5705285 PART OF KIT P/N 5704477	12
11	KDDZZ		19207	11668315-3	RING, PISTON .030 OVERSIZE PART OF KIT P/N 5705286 PART OF KIT P/N 5704478	12
11	KDDZZ		19207	11668315-4	RING, PISTON .040 OVERSIZE PART OF KIT P/N 5705287 PART OF KITS P/N 5704479	12
12	KFHZZ		19207	11668316	RING,PISTON STANDARD PART OF KIT P/N F1682-80 and 5704475	24
12	KDDZZ		19207	11668316-1	RING,PISTON .010 OVERSIZE PART OF2 KIT P/N 5705284 PART OF KIT P/N 5704476	24
12	KDDDZ		19207	11668316-2	RING,PISTON .020 OVERSIZE PART OF KIT P/N 5705285 PART OF KIT P/N 5704477	24
12	KDDDZ		19207	11668316-3	RING,PISTON .030 OVERSIZE PART OF KIT P/N 5705286 PART OF KIT P/N 5704478	24
12	KDDZZ		19207	11668316-4	RING,PISTON .040 OVERSIZE PART OF KIT P/N 5705287	24
13	KFHZZ		19207	11668317	RING,PISTON STANDARD PART OF KIT P/N 5704475	12
13	KDDZZ		19207	11668317-1	RING,PISTON .010 OVERSIZE PART OF KIT P/N 5704476	12
13	KDDZZ		19207	11668317-2	RING,PISTON .020 OVERSIZE PART OF KIT P/N 5704477	12
13	KDDZZ		19207	11668317-3	RING,PISTON .030 OVERSIZE PART OF KIT P/N 5704478	12
13	KDDZZ		19207	11668317-4	RING,PISTON .040 OVERSIZE PART OF KIT P/N 5704479	12
13	KFHZZ		19207	12354401	RING,PISTON SPECIAL, PART OF KIT P/N F1682-80	12

(1) ITEM NO.	(2) SMR CODE	(3) NSN	(4) CAGEC	(5) PART NUMBER	(6) DESCRIPTION AND USABLE ON CODES(UOC)	(7) QTY
13	KDDZZ		19207	12354401-1	RING,PISTON .010 OVERSIZE PART OF KIT P/N 5705284	12
13	KDDZZ		19207	12354401-2	RING,PISTON .020 OVERSIZE PART OF KIT P/N 5705285	12
13	KDDZZ		19207	12354401-3	RING,PISTON .030 OVERSIZE PART OF KIT P/N 5705286	12
13	KDDZZ		19207	12354401-4	RING,PISTON .040 OVERSIZE PART OF KIT P/N 5705287	12
14	MHHZZ		96906	MS20995NC32-12	WIRE,NONELECTRICAL (MAKE FROM WIRE, NONELECTRICAL P/N NASM20995NC32)	V
15	PAHZZ	5310-00-849-6883	96906	MS35692-13	NUT,PLAIN,SLOTTED,H	12
16	PAHZZ	2815-00-394-9703	19207	11684078	NOZZLE ASSEMBLY,LUB	6

END OF FIGURE

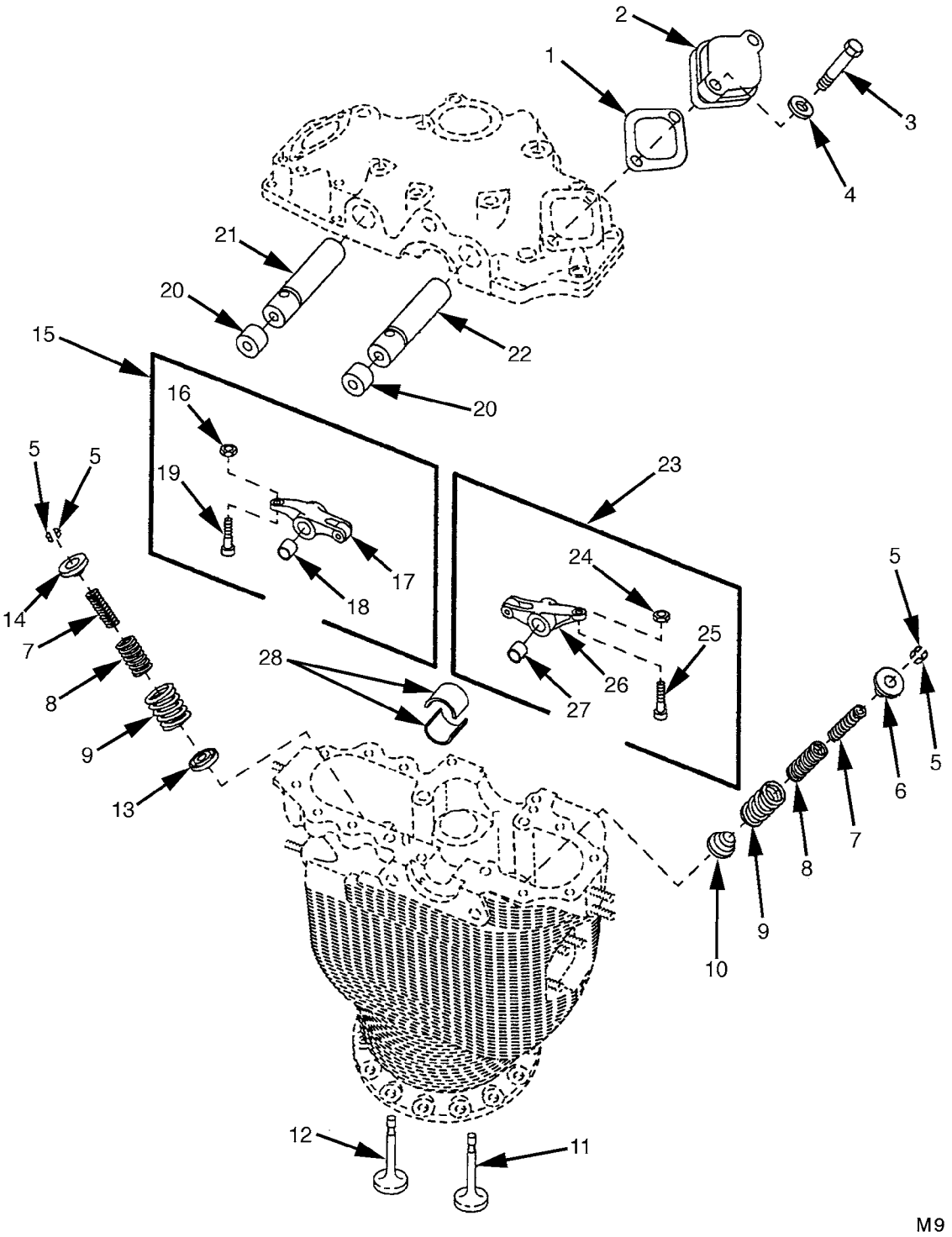

FIGURE 9. VALVES AND ASSOCIATED PARTS

(1) ITEM NO.	(2) SMR CODE	(3) NSN	(4) CAGEC	(5) PART NUMBER	(6) DESCRIPTION AND USABLE ON CODES(UOC)	(7) QTY
					GROUP 0105: VALVES,CAMSHAFTS AND TIMING SYSTEM	
					FIG.9 VALVES AND ASSOCIATED PARTS	
1	PAFZZ	5330-01-374-9264	19207	8725296 NON-ASBESTOS	GASKET PART OF KIT P/N 5704488	2
2	PBFZZ	5340-00-454-8599	19207	7320408	COVER,ACCESS	2
3	PAFZZ	5305-00-225-9092	96906	MS90726-37	SCREW,CAP,HEXAGON H	4
4	PAFZZ	5310-00-167-0820	80205	NAS1149F0563P	WASHER,FLAT	4
5	PAHZZ	2805-00-774-4610	02978	300113	LOCK,VALVE SPRING R	4
6	PAHZZ	5340-00-753-9839	02978	515368	SEAT,HELICAL COMPRE	1
7	PAHZZ	5360-00-678-3209	19207	7320427	SPRING,HELICAL,COMP	2
8	PAHZZ	5360-00-678-3207	19207	7320429	SPRING,HELICAL,COMP	2
9	PAHZZ	5360-00-678-3208	19207	7320428	SPRING,HELICAL,COMP	2
10	PAHZZ	2805-00-753-9838	02978	515462	ROTOR,ENGINE POPPET	1
11	PAHZZ	2815-00-150-7407	19207	11610010	VALVE,POPPET,ENGINE	1
12	PAHZZ	2815-00-150-7406	19207	10951239	VALVE,POPPET,ENGINE	1
13	PAHZZ	5340-00-679-1591	19207	7744617	SEAT,HELICAL COMPRE	1
14	PAHZZ	2805-00-774-4798	02978	302371	LOCK,VALVE SPRING R	1
15	AFFFF		19207	8725289	ROCKER ARM ASSEMBLY	1
16	PAFZZ	5310-00-776-7317	19207	7767317	.NUT,PLAIN,HEXAGON	1
17	PAFZZ	2815-00-678-3195	19207	8725281	.ROCKER ARM,ENGINE P	1
18	PAFZZ	3120-00-678-3197	19207	8725208	.BEARING,SLEEVE	2
19	PAFZZ	2805-00-776-7321	02978	7767321	.SCREW ASSEMBLY,ADJU	1
20	PAFZZ	5365-00-408-1268	19207	7320384	PLUG,MACHINE THREAD	2
21	PAFZZ	3040-01-026-0704	19207	7320394	SHAFT,STRAIGHT	1
22	PAFZZ	3040-01-017-1483	19207	7320393	SHAFT,STRAIGHT	1
23	AFFFF		19207	8725295	ROCKER ARM ASSEMBLY	1
24	PAFZZ	5310-00-776-7317	19207	7767317	.NUT,PLAIN,HEXAGON	1
25	PAFZZ	2805-00-776-7321	02978	7767321	.SCREW ASSEMBLY,ADJU	1
26	PAFZZ	2815-00-678-3194	19207	8725293	.ROCKER ARM,ENGINE P	1
27	PAFZZ	3120-00-678-3196	19207	8725209	.BEARING,SLEEVE	2
28	PAHZZ	3120-00-275-1610	19207	11668067	BEARING HALF,SLEEVE	2

END OF FIGURE

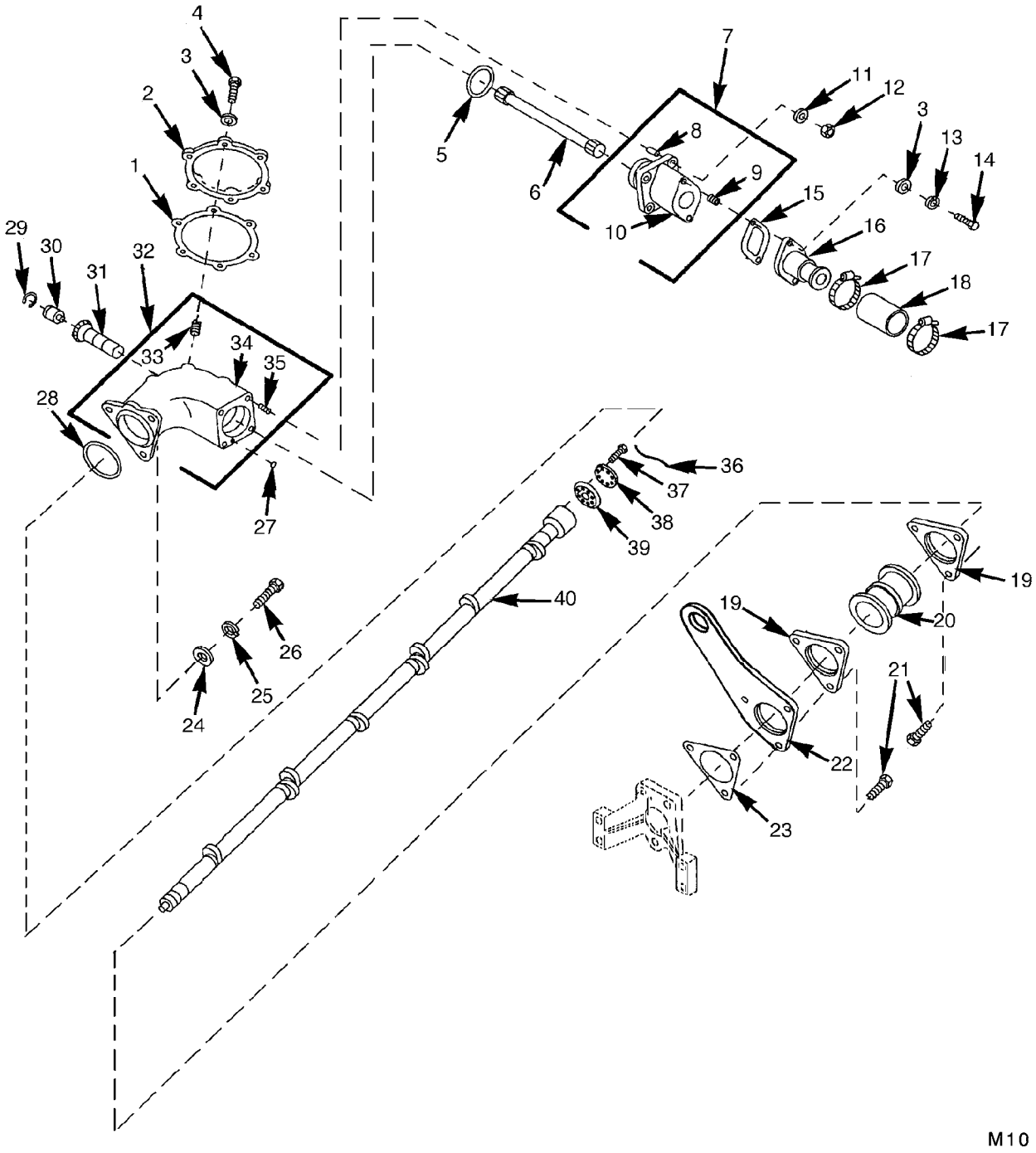

FIGURE 10. CAMSHAFT AND DRIVE GEARS
(LEFT BANK)

(1) ITEM NO.	(2) SMR CODE	(3) NSN	(4) CAGEC	(5) PART NUMBER	(6) DESCRIPTION AND USABLE ON CODES(UOC)	(7) QTY
					GROUP 0105: VALVES,CAMSHAFTS,AND TIMING SYSTEM	
					FIG.10 CAMSHAFT AND DRIVE GEARS (LEFT BANK)	
1	PAHZZ	5330-00-679-8054	63728	583486	GASKET PART OF KIT P/N 5704488	1
2	PBHZZ	5340-00-125-3891	19207	8725253	COVER,ACCESS	1
3	PAHZZ	5310-00-167-0820	80205	NAS1149F0563P	WASHER,FLAT	8
4	PAHZZ	5305-00-051-4076	96906	MS90727-34	SCREW,CAP,HEXAGON H	6
5	PAHZZ	5331-00-579-7918	81343	MS28775-229	O-RING PART OF KIT P/N 5704488	1
6	PAHZZ	2815-00-679-8058	02978	583294	SHAFT,SHOULDERED	1
7	PAHHH	2815-00-455-9496	19207	8682540	ADAPTOR,CAMSHAFT DR	1
8	PBHZZ	5365-00-733-8667	02978	400507	.SPACER,SLEEVE	1
9	PAHZZ	5325-00-514-2321	96906	MS124737	.INSERT,SCREW THREAD	2
10	XAHZZ		19207	8682541	.ADAPTOR	1
11	PAHZZ	5310-00-333-7348	19207	8679576	WASHER,FLAT	4
12	PAHZZ	5310-00-959-1488	81349	M45913/2-6FG5C	NUT,SELF-LOCKING,HE	4
13	PAHZZ	5310-00-407-9566	96906	MS35338-45	WASHER,LOCK UOC:2CA,2DA	2
14	PAHZZ	5306-00-225-9089	80205	MS90726-34	BOLT,MACHINE	2
15	PAHZZ	5330-01-393-7137	14153	02800	GASKET PART OF KIT P/N 5704488	1
16	PAHZZ	4730-00-223-7014	19207	8682816	ADAPTER,STRAIGHT,FL	1
17	PAHZZ	4730-00-908-3193	83299	0612596-00	CLAMP,HOSE	2
18	PAHZZ	4720-00-896-6166	19207	10898794	HOSE,AIR DUCT	1
19	PBHZZ	2805-00-407-6761	19207	10865283	FLANGE,CAMSHAFT,ENG	9
20	PAHZZ	2815-00-394-9719	19207	11684135	SLEEVE,INTERCYLINDE	5
21	PAHZZ	5305-00-709-8517	96906	MS90727-85	SCREW,CAP,HEXAGON H	30
22	PBHZZ	2510-00-394-9722	19207	11683970	BRACKET,ENGINE MOUN UOC:2CA,2DA	1
23	PAHZZ	5330-00-679-8059	63728	586596	GASKET PART OF KIT P/N 5704488	1
24	PAHZZ	5310-01-391-7138	80205	NAS1149F0763P	WASHER,FLAT	3
25	PAOZZ	5310-00-209-0965	96906	MS35338-47	WASHER,LOCK	3
26	PAHZZ	5305-00-709-8539	96906	MS90727-89	SCREW,CAP,HEXAGON H	3
27	PAHZZ	5331-00-582-2133	81343	MS28775-011	O-RING PART OF KIT P/N 5704488	1
28	PAHZZ	5331-00-990-4143	81343	AS3582-230	O-RING PART OF KIT P/N 5704488	1
29	PAHZZ	5325-00-754-1083	96906	MS16625-1137	RING,RETAINING	1
30	PAHZZ	4730-00-490-2172	14351	11682593	FITTING,LUBRICATION	1
31	KFHZZ		19207	8725229	GEAR SHAFT, BEVEL PART OF KIT P/N 5702619	1
32	PAHHH	2815-00-394-9725	19207	11682701	HOUSING,MECHANICAL	1
33	PAHZZ	5325-00-679-8116	02978	C0524411-1	.INSERT,SCREW THREAD	6
34	XAHZZ		19207	11682702	.HOUSING	1
35	PAHZZ	5307-01-513-1290	19207	7744564	.STUD,PLAIN .007 OVERSIZE	4
35	PAHZZ	5307-00-264-2472	19207	7744813	.STUD,PLAIN .003 OVERSIZE	4
36	MHHZZ		96906	MS20995NC40-12	WIRE,NONELECTRICAL (MAKE FROM WIRE, NONELECTRICAL P/N NASM20995NC40)	V
37	PAHZZ	5306-00-906-9702	88044	AN104010	BOLT,MACHINE	8
38	PAHZZ	5340-00-136-1201	19207	8682817	COVER,ACCESS	1
39	KFHZZ		19207	8725225	GEAR BEVEL PART OF KIT P/N 5702619	1
40	PAHZZ	2815-00-679-8053	02978	655527	CAMSHAFT,ENGINE	1

END OF FIGURE

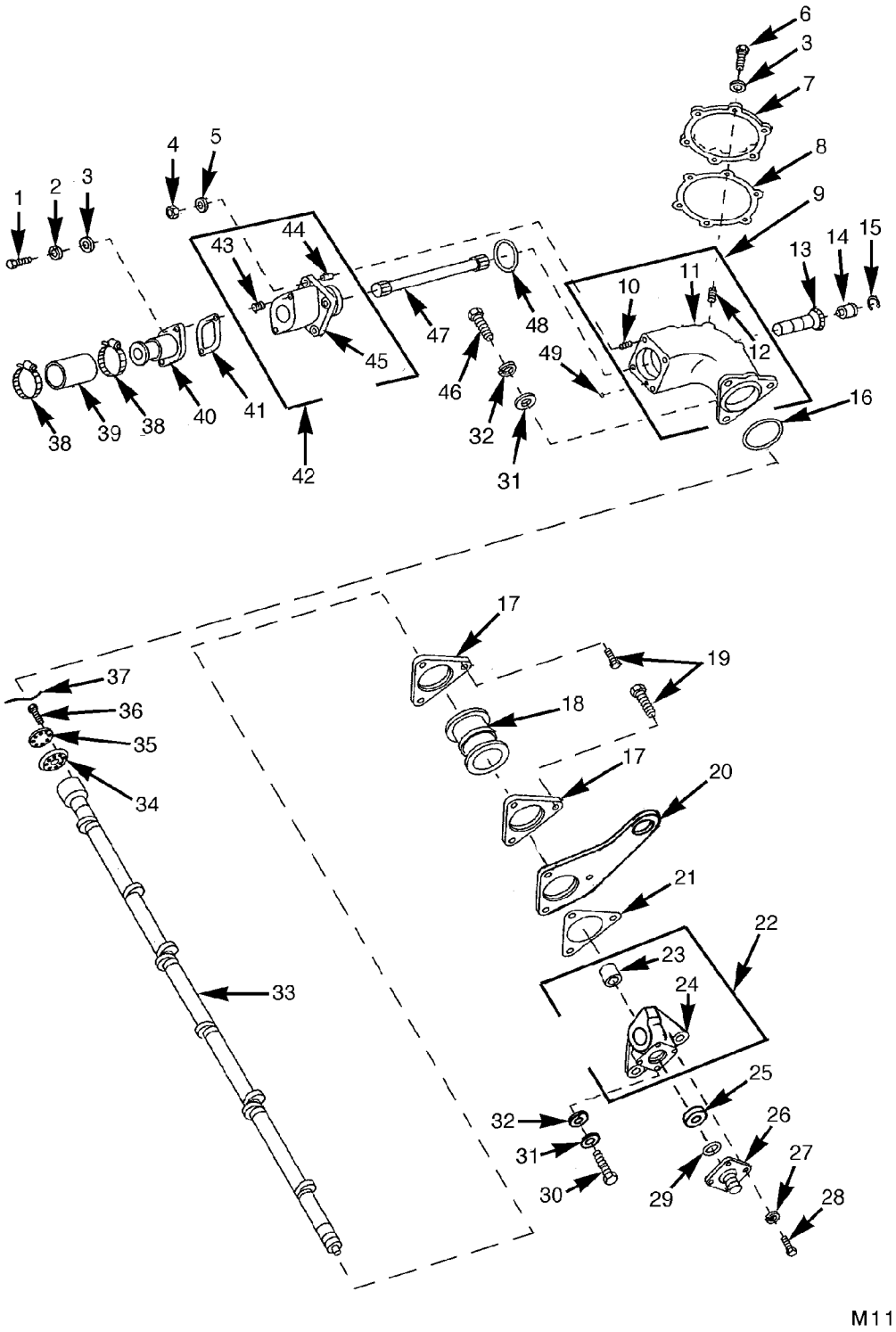

FIGURE 11. CAMSHAFT AND DRIVE GEARS (RIGHT BANK)

(1) ITEM NO.	(2) SMR CODE	(3) NSN	(4) CAGEC	(5) PART NUMBER	(6) DESCRIPTION AND USABLE ON CODES(UOC)	(7) QTY
					GROUP 0105: VALVES,CAMSHAFTS,AND TIMING SYSTEMS	
					FIG.11 CAMSHAFT AND DRIVE GEARS (RIGHT BANK)	
1	PAHZZ	5306-00-225-9089	80205	MS90726-34	BOLT,MACHINE	1
2	PAHZZ	5310-00-015-0214	21450	120214	WASHER,LOCK	2
3	PAHZZ	5310-00-167-0820	80205	NAS1149F0563P	WASHER,FLAT	8
4	PAHZZ	5310-00-959-1488	81349	M45913/2-6FG5C	NUT,SELF-LOCKING,HE	4
5	PAHZZ	5310-00-333-7348	19207	8679576	WASHER,FLAT	4
6	PAHZZ	5305-00-051-4076	80204	B1821BH031F100N	SCREW,CAP,HEXAGON H	6
7	PBHZZ	5340-00-125-3891	19207	8725253	COVER,ACCESS	1
8	PAHZZ	5330-00-679-8054	63728	583486	GASKET PART OF KIT P/N 5704488	1
9	PAHHH	2815-00-394-9726	19207	11682703	HOUSING,MECHANICAL	1
10	PAHZZ	5307-01-513-1290	19207	7744564	.STUD,PLAIN .007 OVERSIZE	4
10	PAHZZ	5307-00-264-2472	19207	7744813	.STUD,PLAIN .003 OVERSIZE	4
11	XAHZZ		19207	11682704	.HOUSING	1
12	PAHZZ	5325-00-679-8116	02978	C0524411-1	.INSERT,SCREW THREAD	6
13	KFHZZ		19207	8725229	GEAR SHAFT, BEVEL PART OF KIT P/N 5702619	1
14	PAHZZ	4730-00-490-2172	14351	11682593	FITTING,LUBRICATION	1
15	PAHZZ	5325-00-754-1083	96906	MS16625-1137	RING,RETAINING	1
16	PAHZZ	5331-00-990-4143	81343	AS3582-230	O-RING PART OF KIT P/N 5704488	1
17	PAHZZ	2805-00-407-6761	19207	10865283	FLANGE,CAMSHAFT,ENG UOC:EFR	10
17	PBHZZ	2805-00-407-6761	19207	10865283	FLANGE,CAMSHAFT,ENG	9
18	PAHZZ	2815-00-394-9719	19207	11684135	SLEEVE,INTERCYLINDE	5
19	PAHZZ	5305-00-709-8517	96906	MS90727-85	SCREW,CAP,HEXAGON H	30
20	PBHZZ	2510-00-394-9722	19207	11683970	BRACKET,ENGINE MOUN UOC:2CA,2DA	1
21	PAHZZ	5330-00-679-8059	63728	586596	GASKET PART OF KIT P/N 5704488	1
22	PBHHH	4320-00-177-7918	19207	8682751	PLATE,CAM,PUMP	1
23	PAHZZ	3120-00-679-8098	19207	8682745	.BEARING,SLEEVE	1
24	PAHZZ	3040-00-851-4909	19207	8682683	.CAM,CONTROL	1
25	PAHZZ	5330-00-291-2830	21450	500241	SEAL,PLAIN ENCASED PART OF KIT P/N 5704488	1
26	PAHZZ	6680-00-973-1263	96906	MS39132-1	ADAPTER,SPEEDOMETER	1
27	PAHZZ	5310-00-141-1795	88044	AN960-416	WASHER,FLAT	4
28	PAHZZ	5306-00-068-0513	80204	B1821BH025F075N	BOLT,MACHINE	4
29	PAHZZ	5331-00-297-9990	96906	MS28775-222	O-RING PART OF KIT P/N 5704488	1
30	PAHZZ	5305-00-709-8515	80204	B1821BH044F138N	SCREW,CAP,HEXAGON H	1
31	PAOZZ	5310-00-209-0965	96906	MS35338-47	WASHER,LOCK	4
32	PAHZZ	5310-00-141-1795	80205	NAS1149F0463P	WASHER,FLAT	4
33	PAHZZ	4810-00-052-8002	77445	587180	CAMSHAFT,ENGINE	1
34	KFHZZ		19207	8725225	GEAR BEVEL PART OF KIT P/N 5702619	1
35	PAHZZ	5340-00-136-1201	19207	8682817	COVER,ACCESS	1
36	PAHZZ	5306-00-906-9702	88044	AN104010	BOLT,MACHINE	8
37	MHHZZ		96906	MS20995NC40-12	WIRE,NONELECTRICAL (MAKE FROM WIRE, NONELECTRICAL P/N NASM20995NC40)	V
38	PAHZZ	4730-00-908-3193	83299	0612596-00	CLAMP,HOSE	1
39	PAHZZ	4720-00-896-6166	19207	10898794	HOSE,AIR DUCT	1
40	PAHZZ	4730-00-223-7014	19207	8682816	ADAPTER,STRAIGHT,FL	1
41	PAHZZ	5330-01-393-7137	14153	02800	GASKET PART OF KIT P/N 5704488	1
42	PAHHH	2815-00-455-9496	19207	8682540	ADAPTOR,CAMSHAFT DR	1
43	PAHZZ	5325-00-514-2321	96906	MS124737	.INSERT,SCREW THREAD	2
44	PBHZZ	5365-00-733-8667	02978	400507	.SPACER,SLEEVE	1
45	XAHZZ		19207	8682541	.ADAPTOR	1
46	PAHZZ	5305-00-709-8539	96906	MS90727-89	SCREW,CAP,HEXAGON H	3
47	PAHZZ	2815-00-679-8058	02978	583294	SHAFT,SHOULDERED	1
48	PAHZZ	5331-00-579-7918	81343	MS28775-229	O-RING PART OF KIT P/N 5704488	1
49	PAHZZ	5331-00-582-2133	81343	MS28775-011	O-RING PART OF KIT P/N 5704488	1

END OF FIGURE

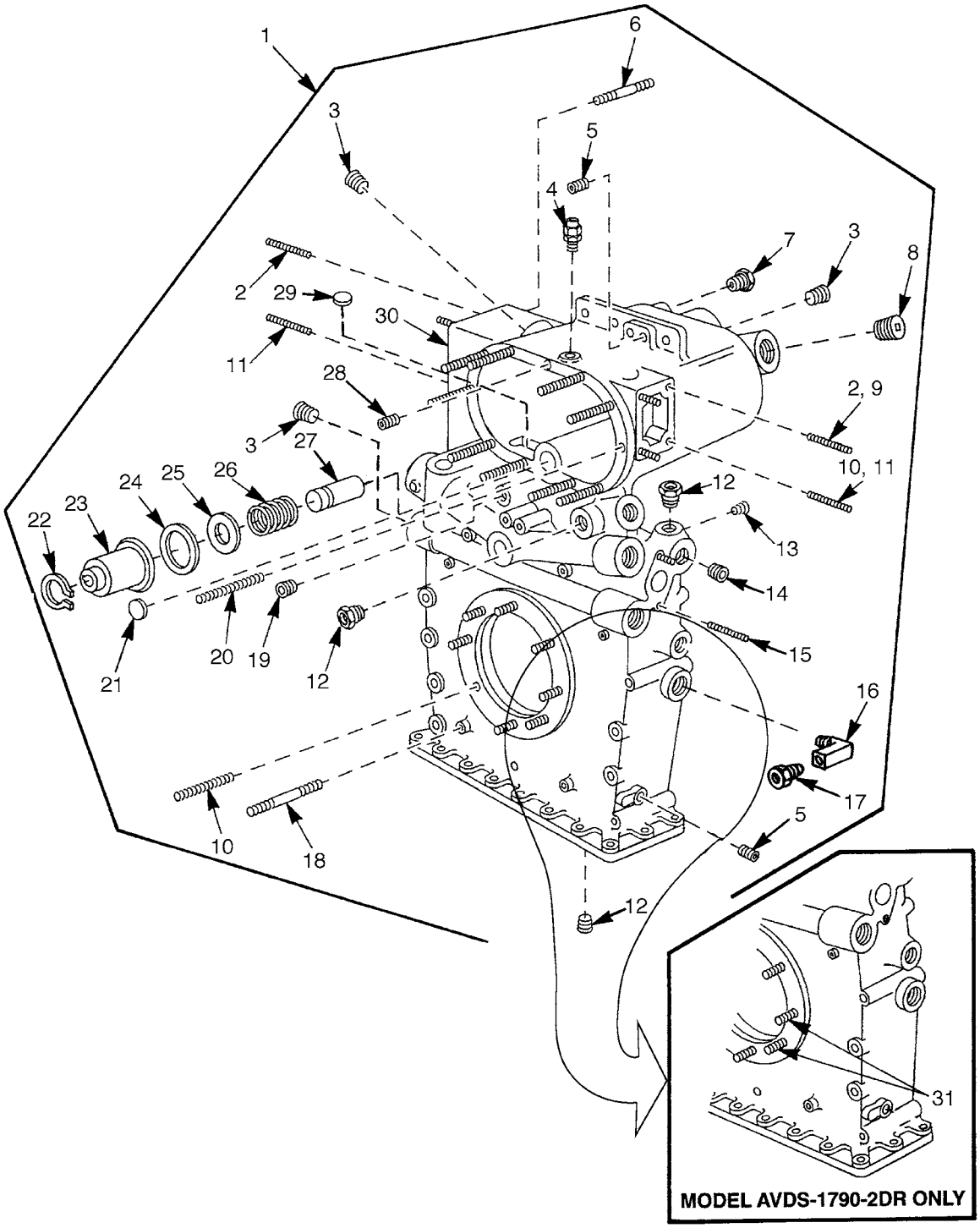

FIGURE 12. CRANKSHAFT DAMPER

(1) ITEM NO.	(2) SMR CODE	(3) NSN	(4) CAGEC	(5) PART NUMBER	(6) DESCRIPTION AND USABLE ON CODES(UOC)	(7) QTY
					GROUP 0106: ENGINE LUBRICATION SYSTEM	
					FIG.12 CRANKSHAFT DAMPER	
1	PBHHH	3040-01-519-7683	19207	12354477	HOUSING,MECHANICAL UOC:2CA,2DA	1
1	PBHHH	3040-01-519-6392	19207	12354477-1	HOUSING,MECHANICAL UOC:EFR	1
2	PAHZZ	5307-01-513-1290	19207	7744564	.STUD,PLAIN .007 OVERSIZE	4
2	PAHZZ	5307-00-264-2472	19207	7744813	.STUD,PLAIN .003 OVERSIZE	4
3	PAHZZ	4730-01-022-6066	81348	WW-P-471ACBBDG	.PLUG,PIPE	5
4	PAOZZ	4730-00-837-7073	96906	MS51500A4-4S	.ADAPTER,STRAIGHT,PI	1
5	PAHZZ	5325-01-073-2809	96906	MS21209F5-15	.INSERT,SCREW THREAD	4
6	PAOZZ	5307-00-776-7804	19207	7767804	.STUD,PLAIN .003 OVERSIZE	2
6	PAOZZ	5307-00-776-7805	19207	7767805	.STUD,PLAIN .007 OVERSIZE	2
7	PAOZZ		81343	6-2140140CA	.BUSHING,PIPE	1
8	PAHZZ	4730-00-044-4715	24617	444715	.PLUG,PIPE	2
9	PAHZZ	5307-00-866-6736	19207	8666736	.STUD,PLAIN .003 OVERSIZE UOC:EFR	2
9	PAHZZ	5307-00-866-6737	19207	8666737	.STUD,PLAIN .007 OVERSIZE UOC:EFR	10
10	PAHZZ	5307-00-774-4572	19207	7744572	.STUD,PLAIN .003 OVERSIZE	14
10	PAHZZ	5307-00-774-4573	19207	7744573	.STUD,PLAIN .007 OVERSIZE	14
11	PAHZZ	5307-00-734-8812	19207	7348812	.STUD,PLAIN .003 OVERSIZE	4
11	PAHZZ	5307-00-734-8813	19207	7348813	.STUD,PLAIN .007 OVERSIZE	4
12	PAFZZ	4730-00-278-2966	96906	MS27769C6	.PLUG,PIPE	4
13	PAFZZ	4730-01-030-4950	24617	272977	.PLUG,PIPE	1
14	PBOZZ	4730-00-448-9896	19207	11684133	.BUSHING,PIPE	1
15	PAHZZ	5307-00-734-8669	19207	7348669	.STUD,PLAIN .007 OVERSIZE	2
15	PAHZZ	5307-00-734-8668	19207	7348668	.STUD,PLAIN .003 OVERSIZE	2
16	PAOZZ	4730-00-289-2357	81343	8-8140239C	.ELBOW,PIPE	1
17	PAOZZ	4730-00-044-4035	79470	C3109X8X6	.BUSHING,PIPE	1
18	PAOZZ	5307-00-741-5384	19207	7415384	.STUD,PLAIN .003 OVERSIZE	1
18	PAOZZ	5307-01-113-4110	19207	7415385	.STUD,PLAIN .007 OVERSIZE	1
19	PAHZZ	4730-00-555-8291	10001	12Z329PC93	.PLUG,PIPE	1
20	PAHZZ	5307-00-866-6736	19207	8666736	.STUD,PLAIN .003 OVERSIZE	10
20	PAHZZ	5307-00-866-6737	19207	8666737	.STUD,PLAIN .007 OVERSIZE	10
21	PAHZZ	5340-00-828-2830	96906	MS9176-28	.PLUG,EXPANSION	1
22	PAOZZ	5325-00-803-9976	96906	MS16624-131	.RING,RETAINING	2
23	PAOZZ	2940-00-392-9633	19207	11684053	.FILTER BODY,FLUID	2
24	PAOZZ	5330-00-486-0320	19207	11684058	.RETAINER,PACKING	2
25	PAOZZ	5310-00-477-0789	19207	11684034	.WASHER,FLAT	2
26	PAOZZ	5360-00-510-4109	19207	11684066	.SPRING,HELICAL,COMP	2
27	PAOZZ	4330-00-516-1265	19207	11684060	.BRACKET,FILTER MOUN	2
28	PAHZZ	5325-00-680-8768	96906	MS21209F6-15	.INSERT,SCREW THREAD	1
29	PAHZZ	5340-00-468-1596	19207	11668623-1	.PLUG,EXPANSION	1
30	XAHZZ		19207	12468930	.HOUSING	1
31	PAFZZ	5307-00-678-6882	19207	7992665	.STUD,PLAIN .003 OVERSIZE UOC:EFR	4
31	PAHZZ	5307-00-678-6883	19207	7992666	.STUD,PLAIN .007 OVERSIZE UOC:EFR	4

END OF FIGURE

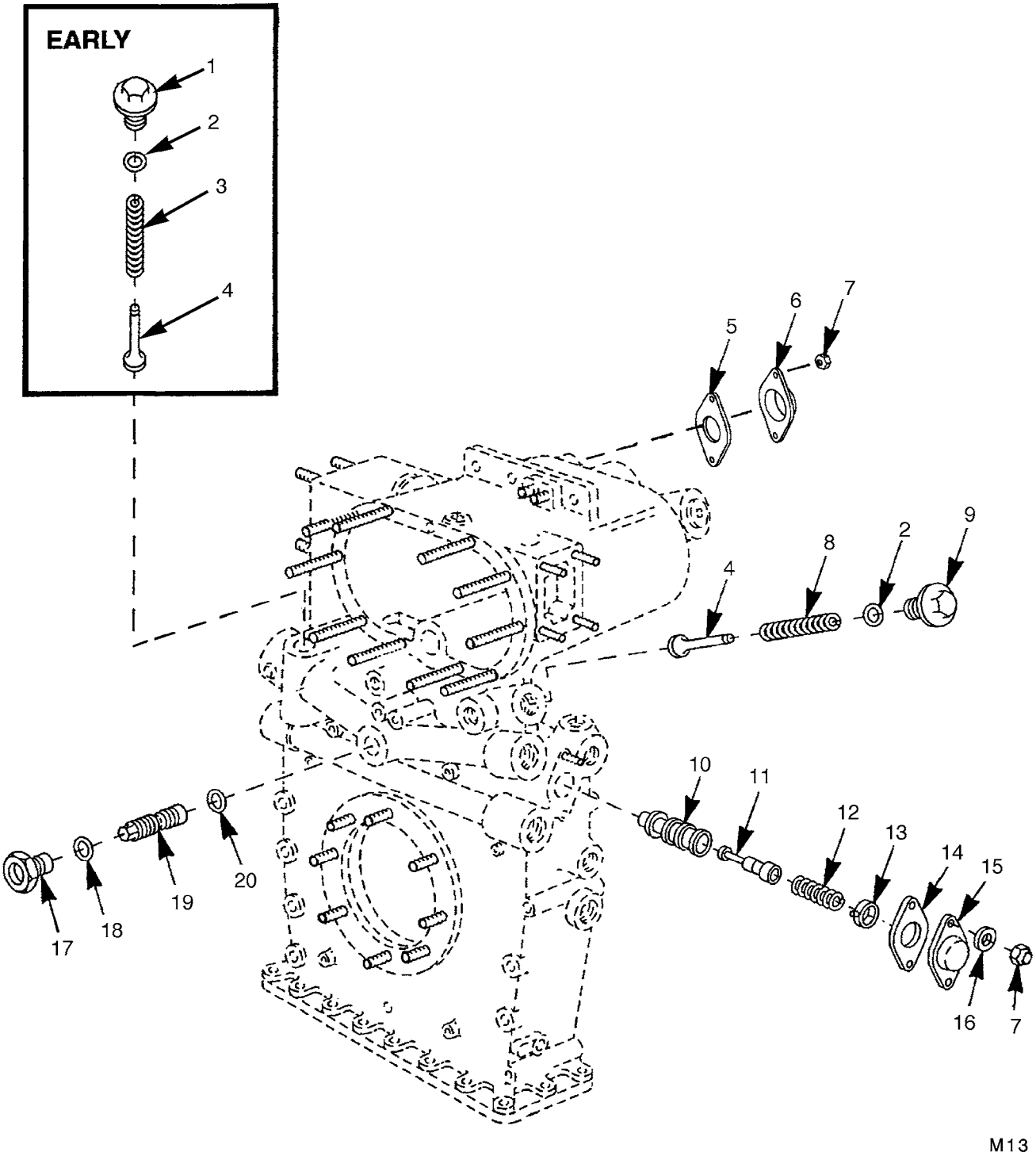

FIGURE 13. OIL FILTER HOUSING

(1) ITEM NO.	(2) SMR CODE	(3) NSN	(4) CAGEC	(5) PART NUMBER	(6) DESCRIPTION AND USABLE ON CODES(UOC)	(7) QTY
					GROUP 0106: ENGINE LUBRICATION SYSTEM	
					FIG.13 OIL FILTER HOUSING	
1	PAOZZ	5365-01-048-8643	19207	12254260	PLUG,MACHINE THREAD	1
2	PAOZZ	5330-00-269-2844	96906	MS35769-47	GASKET PART OF KIT P/N 5704488	2
3	PAOZZ	5360-01-052-0941	19207	12254261	SPRING,HELICAL,COMP	1
4	PAFZZ	2815-00-678-3218	02978	8725222	PLUNGER,RELIEF VALV	2
5	PAHZZ	5330-00-678-5388	19207	8682680	GASKET PART OF KIT P/N 5704488	1
6	PAHZZ	5340-01-511-1476	19207	12354469	COVER,ACCESS	1
7	PAFZZ	5310-00-088-0553	80205	MS21044N5	NUT,SELF-LOCKING,HE	4
8	PAFZZ	5360-00-678-3276	19207	8682815	SPRING,HELICAL,COMP	1
9	PAFZZ	5365-00-402-8380	19207	8725218	PLUG,MACHINE THREAD	1
10	PAFZZ	2815-00-397-3314	19207	11684033	SLEEVE,OIL PRESSURE	1
11	PAFZZ	2815-00-678-3223	19207	8725276	PLUNGER,REGULATOR V	1
12	PAFZZ	5360-00-678-3222	19207	8725240	SPRING,HELICAL,COMP	1
13	PAFZZ	4310-00-406-4619	19207	8725224	PLATE,VALVE STOP	1
14	PAFZZ	5330-01-393-9087	63728	SC8725239	GASKET PART OF KIT P/N 5704488	1
15	PBFZZ	5340-00-151-5991	19207	8725211	COVER,ACCESS	1
16	PAFZZ	5310-00-167-0820	80205	NAS1149F0563P	WASHER,FLAT	2
17	PAHZZ	4730-00-423-3677	19207	11683926	ADAPTER,STRAIGHT,TU	1
18	PAHZZ	5330-01-352-3361	96906	MS35769-35	GASKET PART OF KIT P/N 5704488	1
19	PAHZZ	4820-00-394-9693	19207	11683925	VALVE,PLUG	1
20	PAHZZ	5331-00-166-1072	81349	M83248/1-118	O-RING PART OF KIT P/N 5704488	1

END OF FIGURE

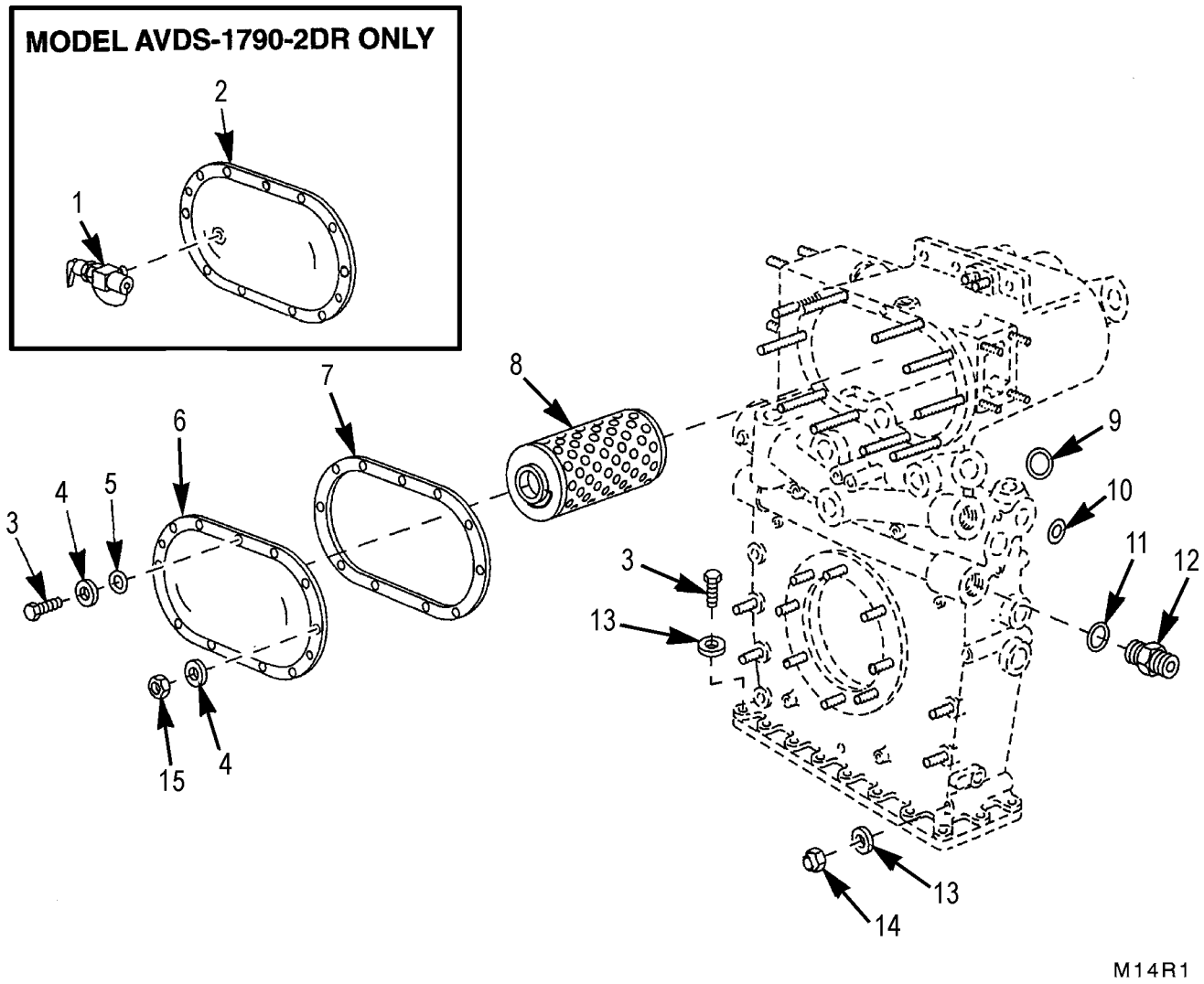

FIGURE 14. FLUID FILTER HOUSING

(1) ITEM NO.	(2) SMR CODE	(3) NSN	(4) CAGEC	(5) PART NUMBER	(6) DESCRIPTION AND USABLE ON CODES(UOC)	(7) QTY
					GROUP 0106: ENGINE LUBRICATION SYSTEM	
					FIG. 14 FLUID FILTER HOUSING	
1	PAOZZ	4820-01-073-0080	19207	11669424	COCK,DRAIN. . . . . UOC:EFR	1
2	PAOZZ	2940-01-070-5969	19207	11684043-1	COVER,FLUID FILTER. . . . . UOC:EFR	1
3	PAOZZ	5305-00-269-3239	80204	B1821BH038F138N	SCREW,CAP,HEXAGON H	13
4	PAOZZ	5310-00-184-8974	96906	MS9320-12	WASHER,FLAT	11
5	PAOZZ	5330-00-003-9302	80205	NAS1523-6Y	PACKING WITH RETAIN PART OF KIT P/N 5704486	1
6	**XDOZZ**		**19207**	**1684043**	**COVER,FLUID FILTER. UOC:2CA,2DA**	**1**
7	PAOZZ	5330-01-298-4850	19207	11684047	GASKET PART OF KIT P/N 5704486	1
8	PAOZZ	4330-00-000-0145	19207	11668619	FILTER ELEMENT,FLUI PART OF KIT P/N 5704486	2
9	PAFZZ	5331-00-166-1076	81349	M83248/1-120	O-RING PART OF KIT P/N 5704488	2
10	PAFZZ	5331-00-166-8403	81349	M83248/1-212	O-RING PART OF KIT P/N 5704488	3
11	PAOZZ	5330-01-053-2920	19207	7403580-1	GASKET PART OF KIT P/N 5704488	4
12	PAOZZ	4730-00-678-3303	50036	7324900	ADAPTER,STRAIGHT,TU.	4
13	PAHZZ	5310-00-333-7348	19207	8679576	WASHER,FLAT UOC:2CA,2DA	17
13	PAHZZ	5310-00-333-7348	19207	8679576	WASHER,FLAT . . . . . UOC:EFR	14
14	PAHZZ	5310-00-950-0039	80205	MS21044N6	NUT,SELF-LOCKING,HE UOC:2CA,2DA	10
14	PAHZZ	5310-00-950-0039	80205	MS21044N6	NUT,SELF-LOCKING,HE . . . . . UOC:EFR	14
15	PAOZZ	5310-00-959-1488	96906	MS51922-21	NUT,SELF-LOCKING,HE	10

END OF FIGURE

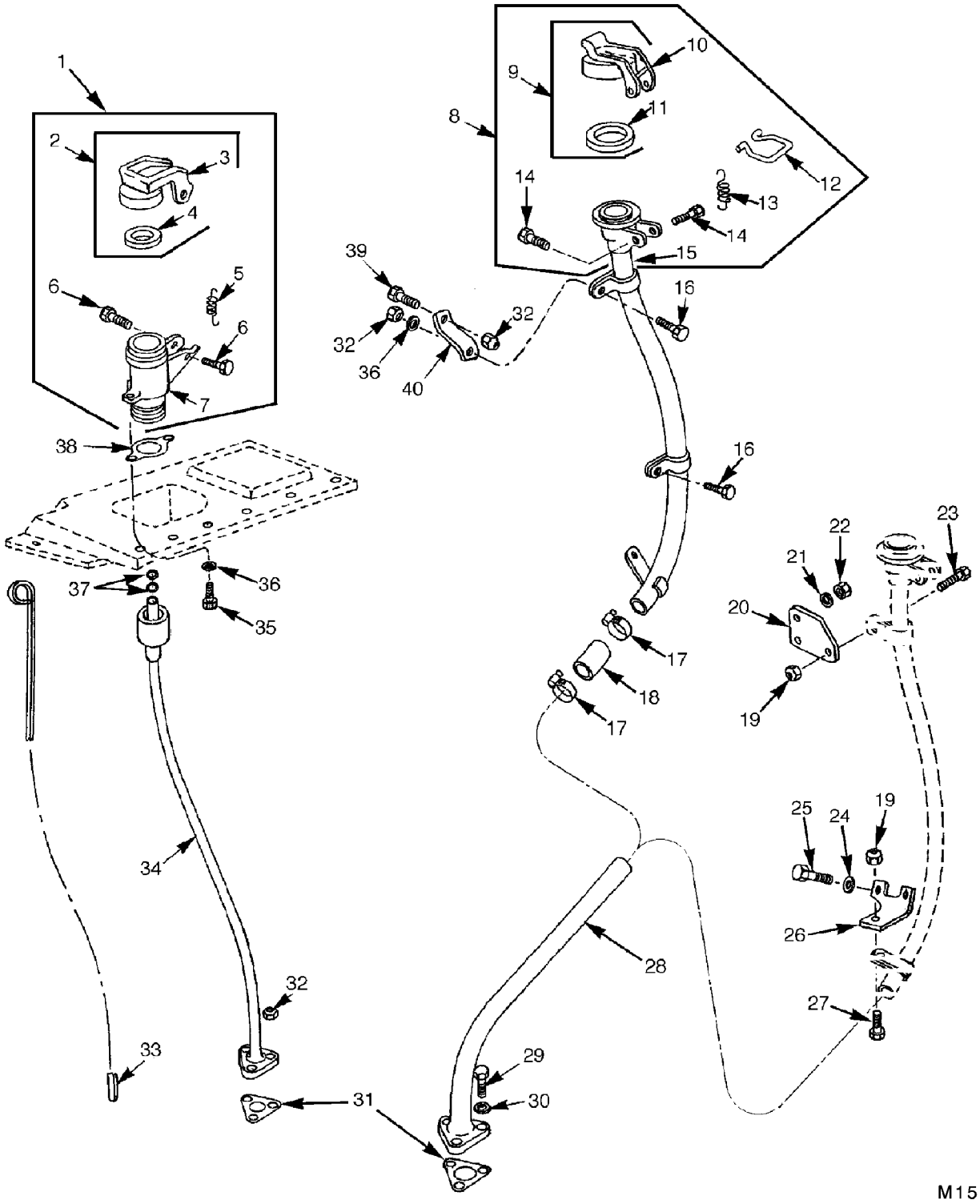

FIGURE 15. OIL GAGE ROD TUBE AND OIL FILLER TUBE

(1) ITEM NO.	(2) SMR CODE	(3) NSN	(4) CAGEC	(5) PART NUMBER	(6) DESCRIPTION AND USABLE ON CODES(UOC)	(7) QTY
					GROUP 0106: ENGINE LUBRICATION SYSTEM	
					FIG.15 OIL GAGE ROD TUBE AND OIL FILLER TUBE	
1	PBOOO	2590-00-406-4621	19207	10935623	CAP,FILLER OPENING	1
2	PBOOO	2590-00-897-2849	19207	8761109	.CAP,FILLER OPENING	1
3	XAOZZ		19207	8717157	..CAP	1
4	PAOZZ	5330-00-599-0942	63728	550556	..PACKING,PREFORMED PART OF KIT P/N 5704488	1
5	PFOZZ	5360-00-410-5836	19207	10935614	.SPRING,HELICAL,EXTE	1
6	PAOZZ	5305-00-206-3851	02978	550559	.SCREW,EXTERNALLY RE	2
7	XAOZZ		19207	10935619	.NECK	1
8	PBOOO	2910-00-406-4615	19207	11641922	FILLER NECK UOC:EFR	1
8	PBOOO	2590-01-145-8312	19207	12314593	FILLER NECK UOC:2CA,2DA	1
9	PBOOO	2590-00-897-2849	19207	8761109	.CAP,FILLER OPENING	1
10	XAOZZ		19207	8717157	..CAP	1
11	PAOZZ	5330-00-599-0942	63728	550556	..PACKING,PREFORMED PART OF KIT P/N 5704488	1
12	PAOZZ	5340-01-275-5033	19207	12314659	.HANDLE,BAIL UOC:2CA,2DA	1
13	PFOZZ	5360-00-410-5836	19207	10935614	.SPRING,HELICAL,EXTE	1
14	PAOZZ	5305-00-206-3851	02978	550559	.SCREW,EXTERNALLY RE	2
15	XAOZZ		19207	11682647	.TUBE ASSEMBLY UOC:EFR	1
15	XAOZZ		19207	12314592	.TUBE ASSY UOC:2CA,2DA	1
16	PAOZZ	5306-00-050-1238	80204	B1821BH031F075N	BOLT,MACHINE UOC:2CA,2DA	2
17	PAOZZ	4730-00-909-8627	01276	FF9311-36	CLAMP,HOSE	2
18	MOOZZ		19207	8357967-4	HOSE,NONMETALLIC (MAKE FROM HOSE, NONMETALLIC P/N 1631082)	V
19	PAOZZ	5310-00-959-1488	81349	M45913/2-6FG5C	NUT,SELF-LOCKING,HE UOC:EFR	2
20	PAOZZ	5340-01-046-8943	19207	11682609	BRACKET,MOUNTING UOC:EFR	1
21	PAOZZ	5310-00-774-4570	19207	7744570	WASHER,FLAT UOC:EFR	2
22	PAOZZ	5310-01-151-2732	15653	SPL51712-6	NUT,SELF-LOCKING,HE UOC:EFR	2
23	PAOZZ	5305-00-269-3236	80204	B1821BH038F100N	SCREW,CAP,HEXAGON H UOC:EFR	1
24	PAOZZ	5310-00-637-9541	16764	110730	WASHER,LOCK UOC:EFR	2
25	PAOZZ	5305-00-269-3238	80204	B1821BH038F125N	SCREW,CAP,HEXAGON H UOC:EFR	2
26	PAOZZ	5340-01-052-5072	19207	11682610	BRACKET,ANGLE UOC:EFR	1
27	PAOZZ	5305-00-269-3235	80204	B1821BH038F088N	SCREW,CAP,HEXAGON H	1
28	PBOZZ	4710-00-192-9436	19207	11641927	TUBE ASSEMBLY,METAL	1
29	PAOZZ	5305-00-051-4076	96906	MS90727-34	SCREW,CAP,HEXAGON H	3
30	PAOZZ		19207	7045881	PACKING WITH RETAIN PART OF KIT P/N 5704488	3
31	PAOZZ	5330-00-679-4961	63728	585094	GASKET PART OF KIT P/N 5704488	2
32	PAOZZ	5310-00-088-0553	96906	MS21044N5	NUT,SELF-LOCKING,HE	5
33	PAOZZ	6680-00-423-4051	19207	11684006	GAGE ROD,LIQUID LEV UOC:2CA,2DA	1
33	PAOZZ	6680-01-119-0378	19207	12275750	GAGE ROD,LIQUID LEV UOC:EFR	1
34	PAOZZ	2590-00-399-5302	19207	11684018	FILLER NECK UOC:2CA,2DA	1

(1) ITEM NO.	(2) SMR CODE	(3) NSN	(4) CAGEC	(5) PART NUMBER	(6) DESCRIPTION AND USABLE ON CODES(UOC)	(7) QTY
34	PAOZZ	2590-00-399-5302	19207	11684018	FILLER NECK UOC:EFR	1
35	PAOZZ	5306-00-225-9086	96906	MS90726-31	BOLT,MACHINE	2
36	PAOZZ	5310-00-407-9566	96906	MS35338-45	WASHER,LOCK	2
37	PAOZZ	5331-01-005-3213	81349	M83248/1-327	O-RING PART OF KIT P/N 5704488	2
38	PAOZZ	5330-00-410-9803	19207	10935621	GASKET PART OF KIT P/N 5704488	1
39	PAOZZ	5305-00-267-8965	6W728	4397001-021	SCREW,CAP,HEXAGON H UOC:2CA,2DA	1
40	PBOZZ	5340-01-145-8307	19207	12314591	BRACKET,DOUBLE ANGL UOC:2CA,2DA	1

END OF FIGURE

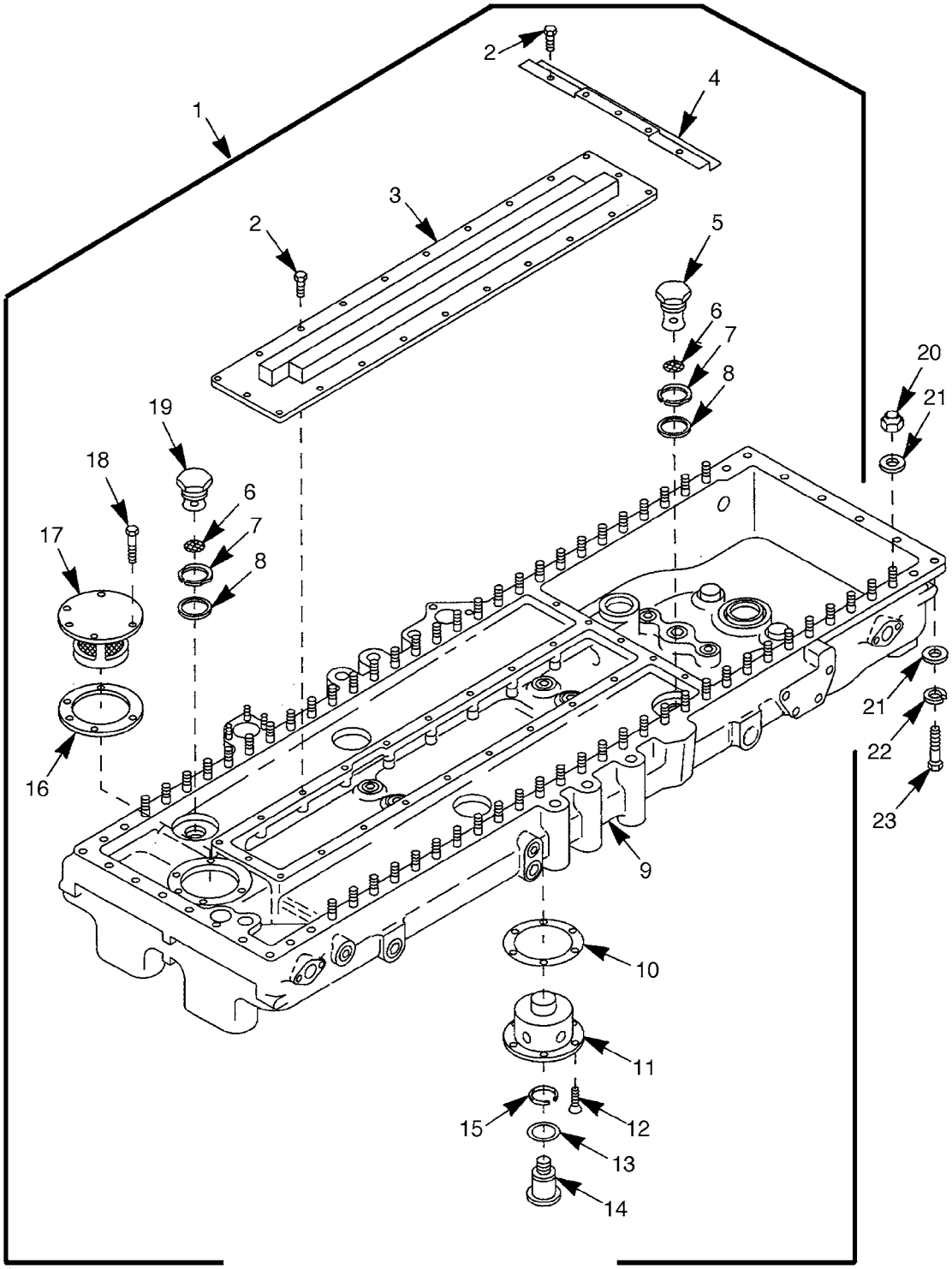

FIGURE 16. OIL PAN, COVER, AND ASSOCIATED PARTS

(1) ITEM NO.	(2) SMR CODE	(3) NSN	(4) CAGEC	(5) PART NUMBER	(6) DESCRIPTION AND USABLE ON CODES(UOC)	(7) QTY
					GROUP 0106: ENGINE LUBRICATION SYSTEM	
					FIG.16 OIL PAN, COVER, AND ASSOCIATED PARTS	
1	PAHHH	2815-00-394-9705	19207	11683998	OIL PAN	1
2	PAHZZ	5305-00-269-3234	80204	B1821BH038F075N	.SCREW,CAP,HEXAGON H	24
3	XAHZZ		19207	11683950	.COVER	1
4	PAHZZ	5340-00-492-1561	19207	11684002	.BRACKET,DOUBLE ANGL	1
5	PAHZZ	5330-00-410-1050	19207	11684007	.RETAINER,OIL SEAL	1
6	PAHZZ	2815-00-410-1196	19207	11684035	.SCREEN,OIL PAN RESE	2
7	PAHZZ	5325-00-558-8482	96906	MS16627-1112	.RING,RETAINING	2
8	PAHZZ	5330-00-196-6714	88044	AN901-20C	.GASKET PART OF KIT P/N 5704488	2
9	XAHHH		19207	11683996	.OIL PAN ASSEMBLY (FOR COMPONENT PARTS SEE GROUP 0106: OIL PAN AND ASSOCIATED PARTS)	1
10	KFHZZ		19207	11684054	.GASKET PART OF KIT P/N 5704488	1
11	XAHZZ		19207	11684061	.ADAPTER	1
12	XAHZZ		96906	MS24668-28	.SCREW	6
13	PAOZZ	5330-00-486-0346	19207	11684095	.GASKET PART OF KIT P/N 5704488	1
14	PAOZZ	5365-00-518-5041	19207	11684091	.PLUG,MACHINE THREAD	1
15	PAOZZ	5325-00-989-7682	96906	MS16626-1143	.RING,RETAINING	1
16	PAHZZ	5330-00-486-0302	19207	11684040	.GASKET PART OF KIT P/N 5704488	1
17	PAHZZ	2815-00-410-1143	19207	11684062	.SCREEN OIL PAN SCAV	1
18	PAHZZ	5305-00-912-5113	96906	MS51096-359	.SCREW,CAP,HEXAGON H	5
19	PAHZZ	5330-00-394-9723	19207	11683999	.RETAINER,OIL SEAL	1
20	PAHZZ	5310-00-950-0039	80205	MS21044N6	NUT,SELF-LOCKING,HE	56
21	PAHZZ	5310-00-333-7348	19207	8679576	WASHER,FLAT	64
22	PAHZZ	5310-00-637-9541	96906	MS35338-46	WASHER,LOCK	8
23	PAHZZ	5306-00-678-3531	19207	7340060	BOLT,MACHINE	8

END OF FIGURE

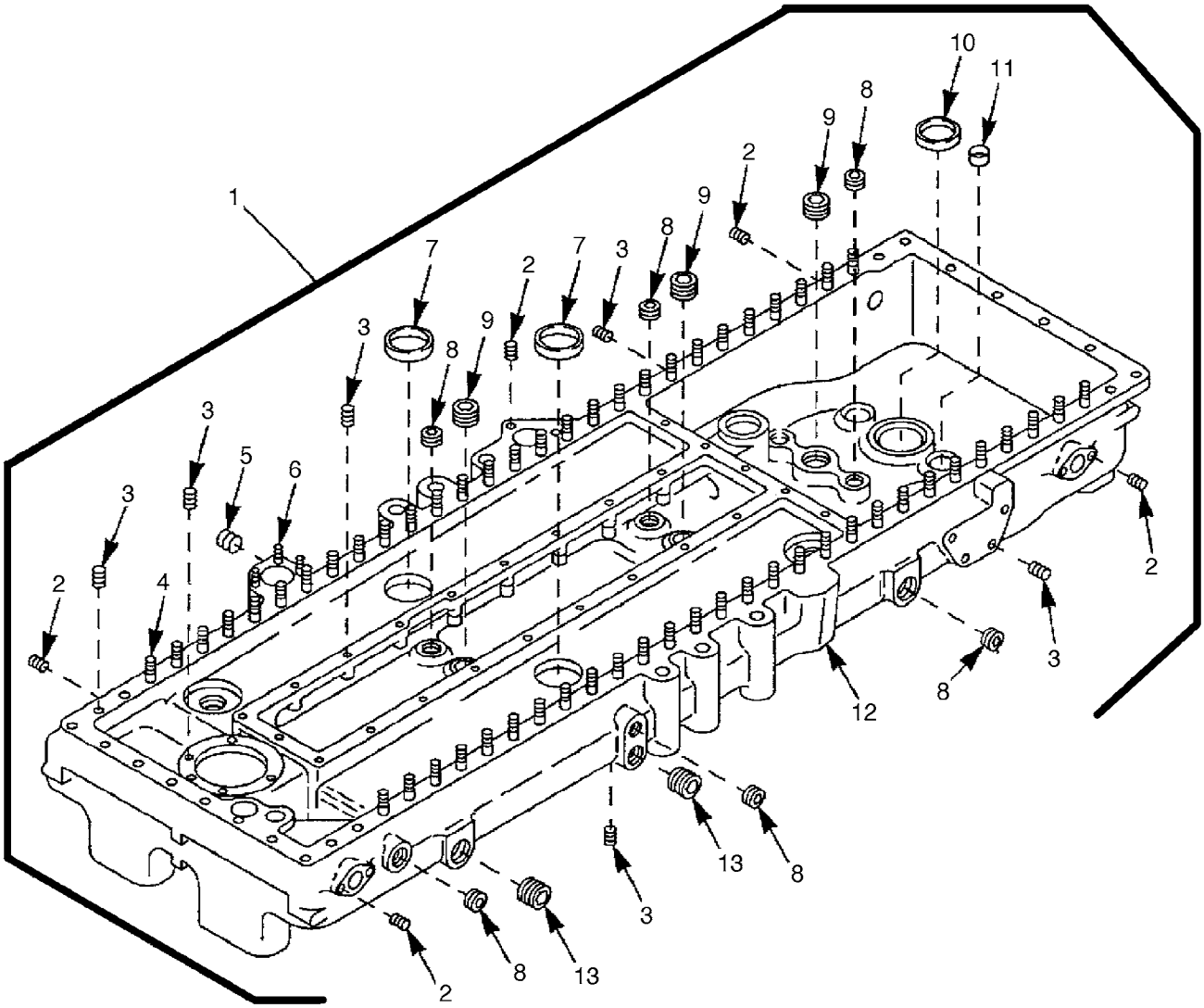

FIGURE 17. OIL PAN AND ASSOCIATED PARTS

(1) ITEM NO.	(2) SMR CODE	(3) NSN	(4) CAGEC	(5) PART NUMBER	(6) DESCRIPTION AND USABLE ON CODES(UOC)	(7) QTY
					GROUP 0106: ENGINE LUBRICATION SYSTEM	
					FIG.17 OIL PAN AND ASSOCIATED PARTS	
1	XAHHH		19207	11683996	OIL PAN ASSEMBLY	1
2	PAHZZ	5325-00-582-7256	96906	MS21209F5-20	.INSERT,SCREW THREAD	11
3	PAHZZ	5325-00-678-3311	96906	MS21209F6-20	.INSERT,SCREW THREAD	55
4	PAHZZ	5307-01-513-4204	19207	7392818	.STUD,ENG START CRDL STANDARD	56
4	PAHZZ	5307-00-866-6736	19207	8666736	.STUD,PLAIN .003 OVERSIZE	56
4	PAHZZ	5307-00-866-6737	19207	8666737	.STUD,PLAIN .007 OVERSIZE	56
5	PAHZZ	4730-00-044-4689	28839	401752	.PLUG,PIPE	1
6	PAHZZ	5307-00-741-0395	28839	401895J	.STUD,PLAIN .003 OVERSIZE	3
6	PAHZZ	5307-00-734-8596	19207	7348596	.STUD,PLAIN .007 OVERSIZE	3
6	PAHZZ		19207	7403503	.STUD,PLAIN STANDARD	3
7	PFHZZ	5340-01-014-7060	19207	11668623-3	.PLUG,EXPANSION	2
8	PAHZZ	4730-00-555-8291	10001	12Z329PC93	.PLUG,PIPE	6
9	PAHZZ	4730-01-022-6066	81348	WW-P-471ACBBDG	.PLUG,PIPE	3
10	XAHZZ		19207	11684073-6	.TUBE,OIL,TRANSFER	1
11	XAHZZ		19207	11684073-3	.TUBE,OIL,TRANSFER	2
12	XAHZZ		19207	11683995	.OIL PAN	1
13	PAHZZ	4730-00-044-4715	24617	444715	.PLUG,PIPE	2

END OF FIGURE

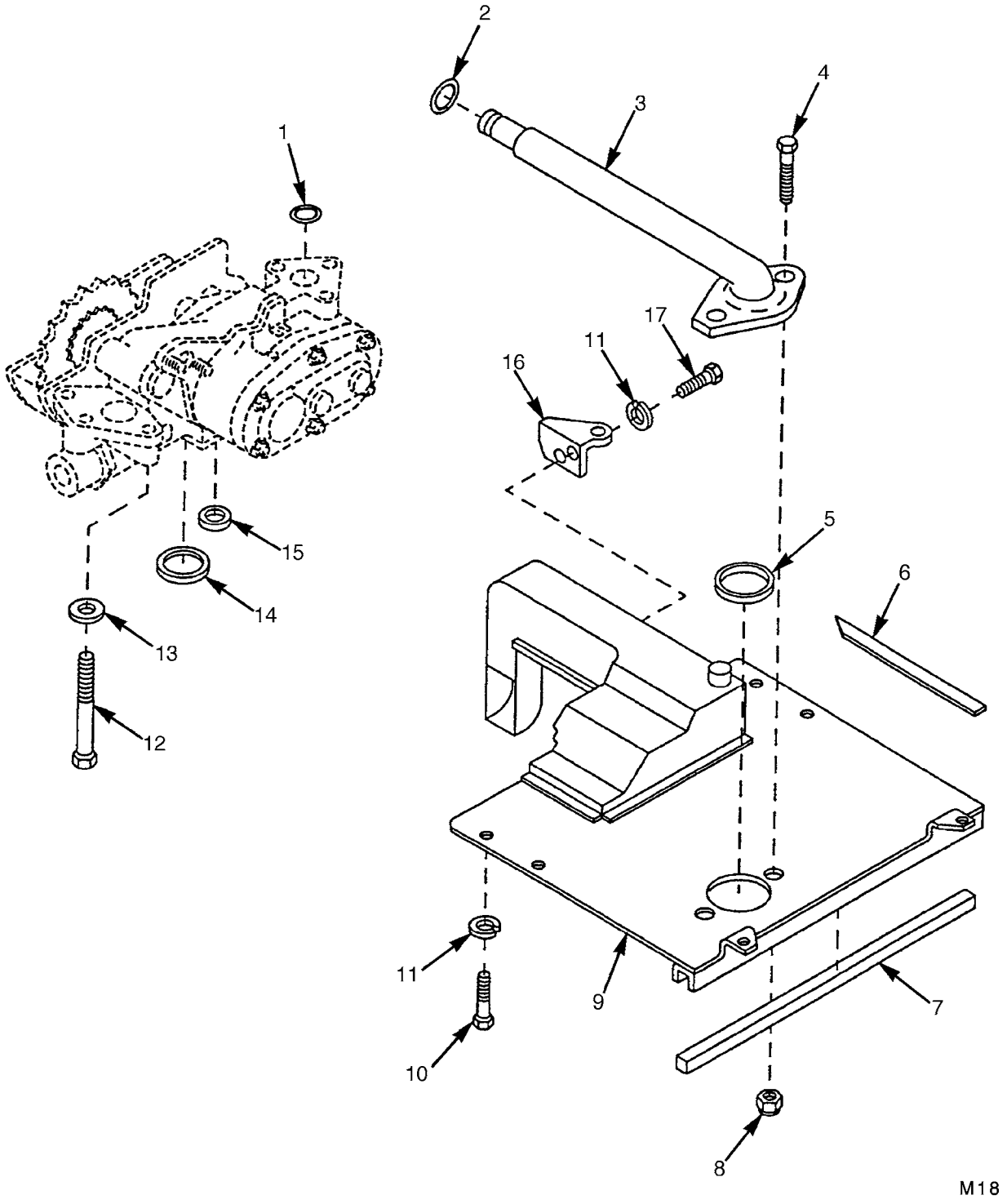

FIGURE 18. OIL PRESSURE COMPARTMENT BAFFLE, OIL PUMP, AND FILLING TUBE

(1) ITEM NO.	(2) SMR CODE	(3) NSN	(4) CAGEC	(5) PART NUMBER	(6) DESCRIPTION AND USABLE ON CODES(UOC)	(7) QTY
					GROUP 0106: ENGINE LUBRICATION SYSTEM	
					FIG.18 OIL PRESSURE COMPARTMENT BAFFLE, OIL PUMP, AND FILLING TUBE	
1	PAHZZ	5331-00-167-5112	81349	M83248/1-123	O-RING PART OF KIT P/N 5704488	2
2	PAHZZ	5331-00-166-0993	81349	M83248/1-017	O-RING PART OF KIT P/N 5704488	1
3	PBHZZ	4710-00-410-1963	19207	11683975	TUBE ASSEMBLY,METAL	1
4	PAHZZ	5305-00-269-3236	80204	B1821BH038F100N	SCREW,CAP,HEXAGON H	2
5	PAHZZ	5330-00-492-1777	19207	11684075	GASKET PART OF KIT P/N 5704488	1
6	MHHZZ		19207	11684037	RUBBER STRIP (MAKE FROM RUBBER SHEET,CELLULAR P/N 11678085-2)	2
7	MHHZZ		19207	11684038	RUBBER STRIP (MAKE FROM RUBBER SHEET,CELLULAR P/N 11678085-1)	1
8	PAHZZ	5310-00-982-4908	96906	MS21045-6	NUT,SELF-LOCKING,HE	2
9	PAHZZ	2815-00-397-3305	19207	11684036	DEFLECTOR,DIRT AND	1
10	PAHZZ	5306-00-050-1238	80204	B1821BH031F075N	BOLT,MACHINE	6
11	PAHZZ	5310-00-407-9566	96906	MS35338-45	WASHER,LOCK	8
12	PAHZZ	5305-00-942-2170	96906	MS51096-364	SCREW,CAP,HEXAGON H	5
13	PAHZZ	5310-00-333-7348	19207	8679576	WASHER,FLAT	5
14	PAHZZ	5330-00-483-9490	19207	11684039-4	GASKET PART OF KIT P/N 5704488	1
15	PAHZZ	5330-00-492-1784	19207	11684039-2	GASKET PART OF KIT P/N 5704488	2
16	PAHZZ	5340-00-423-3976	19207	11684052	BRACKET,MOUNTING	1
17	PAHZZ	5306-00-225-9086	96906	MS90726-31	BOLT,MACHINE	2

END OF FIGURE

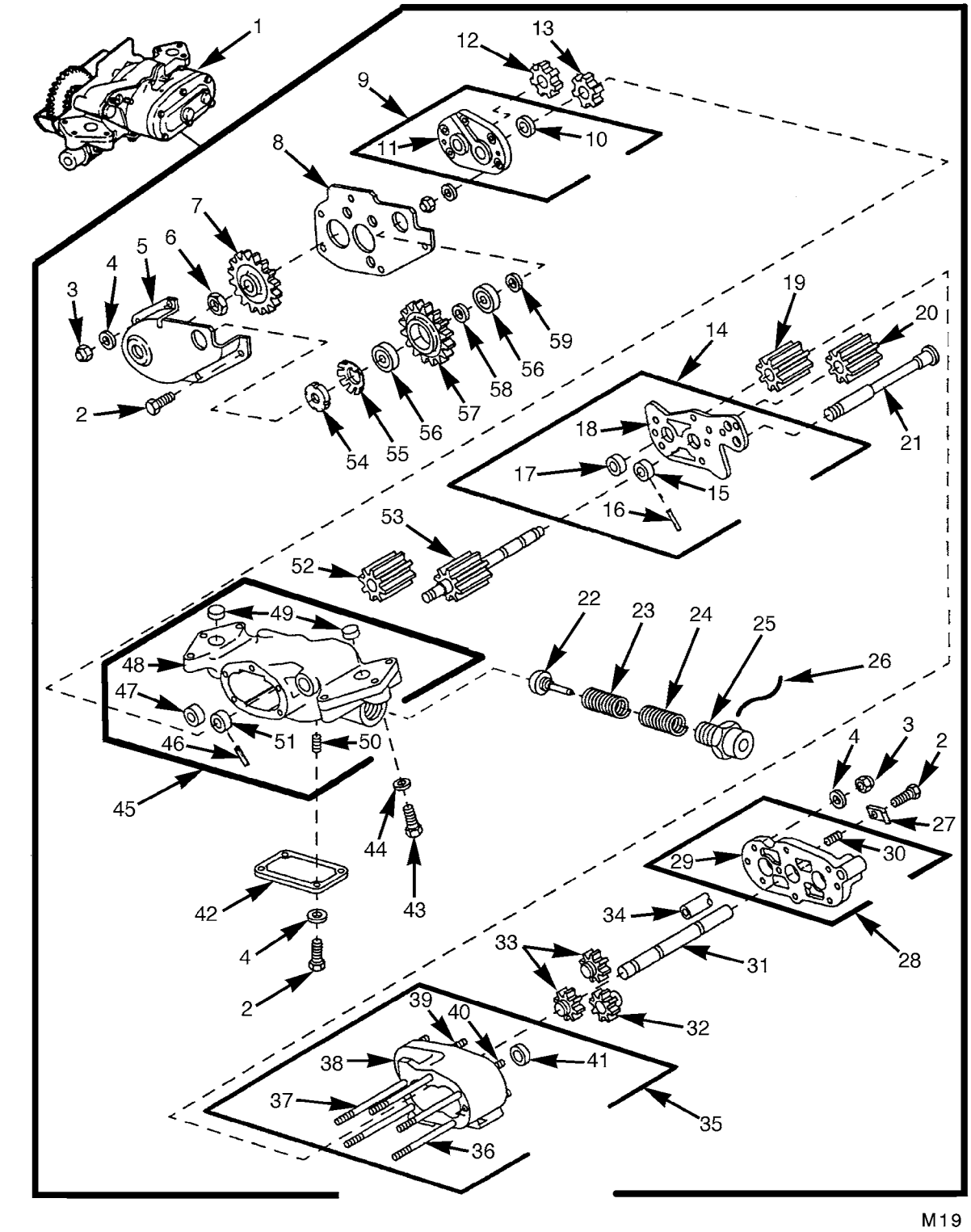

FIGURE 19. OIL PUMP ASSEMBLY

(1) ITEM NO.	(2) SMR CODE	(3) NSN	(4) CAGEC	(5) PART NUMBER	(6) DESCRIPTION AND USABLE ON CODES(UOC)	(7) QTY
					GROUP 0106: ENGINE LUBRICATION SYSTEM	
					FIG.19 OIL PUMP ASSEMBLY	
1	PAHHD		19207	12468945	OIL PUMP ASSEMBLY,E	1
2	PAHZZ	5306-00-225-9086	96906	MS90726-31	.BOLT,MACHINE	8
3	PAHZZ	5310-00-088-0553	80205	MS21044N5	.NUT,SELF-LOCKING,HE	14
4	PAHZZ	5310-00-194-0636	96906	MS9320-11	.WASHER,FLAT	16
5	PAHZZ	5340-00-409-8130	19207	11684013	.COVER,ACCESS	1
6	PAHZZ	5310-01-014-1087	19207	11668622	.NUT,SELF-LOCKING,HE	1
7	PAHZZ	3020-01-510-4482	19207	12468943	.GEAR,SPUR	1
8	XAHZZ		19207	11683963	.PLATE,OIL PUMP	1
9	XAHDD		19207	11683969	.COVER ASSEMBLY	1
10	KDDZZ		19207	11684105-4	..BEARING,SLEEVE PART OF KIT P/N 5704485	1
11	XADZZ		19207	11683961	..COVER	1
12	XAHZZ		19207	11684044	.IMPELLER	1
13	XAHZZ		19207	11684045	.IMPELLER	1
14	XAHDD		19207	11683968	.SPACER ASSEMBLY	1
15	KDDZZ		19207	11684105-2	..BEARING,SLEEVE PART OF KIT P/N 5704485	1
16	PADZZ	5315-00-774-4699	19207	7744699	..PIN,STRAIGHT,HEADLE	1
17	KDDZZ		19207	11684107-2	..BEARING,SLEEVE PART OF KIT P/N 5704485	1
18	XADZZ		19207	11683962	..SPACER	1
19	XAHZZ		19207	11683955	.IMPELLER	1
20	XAHZZ		19207	11683956	.IMPELLER	1
21	XAHZZ		19207	11683944	.SHAFT,OIL PUMP	1
22	XAHZZ		19207	8725099	.VALVE,PRESSURE	1
23	PAHZZ	5360-00-679-4966	02978	583707	.SPRING,HELICAL,COMP INNER	1
24	PAHZZ	5360-00-679-4964	02978	8725113	.SPRING,HELICAL,COMP OUTER	1
25	XAHZZ		19207	8725115	.CAP,OIL PRESSURE	1
26	MHHZZ		96906	MS20995NC40-12	.WIRE,NONELECTRICAL (MAKE FROM WIRE,NONELECTRICAL P/N NASM20995NC40)	1
27	PAHZZ	5310-01-014-1090	19207	11684042	.WASHER,FLAT	1
28	XAHHH		19207	11683951	.COVER ASSEMBLY	1
29	XAHZZ		19207	11683929	..COVER	1
30	PAHZZ	5325-01-073-2809	96906	MS21209F5-15	..INSERT,SCREW THREAD	1
31	XAHZZ		19207	11683945	.SHAFT,OIL PUMP	1
32	XAHZZ		19207	11683958	.IMPELLER:RESERVE OI	1
33	XAHZZ		19207	11683957	.IMPELLER:DRIVEN	2
34	XAHZZ		19207	11683959	.SHAFT,RESERVE OIL	1
35	XAHDD		19207	11683997	.HOUSING ASSEMBLY	1
36	PAHZZ	5307-01-147-3350	19207	8745446	..STUD,PLAIN .003 OVERSIZE	3
36	PAHZZ	5307-00-573-5569	19207	8745447	..STUD,PLAIN .007 OVERSIZE	3
37	PAHZZ	5307-01-019-8946	19207	8365383-6	..STUD,PLAIN .003 OVERSIZE	2
37	PAHZZ	5307-01-019-8947	19207	8365383-7	..STUD,PLAIN .007 OVERSIZE	2
38	XADZZ		19207	11683946	..HOUSING	1
39	PAHZZ	5307-00-026-8489	28839	401809H	..STUD,PLAIN .003 OVERSIZE	5
39	PAHZZ	5307-01-014-7885	19207	7348663	..STUD,PLAIN .007 OVERSIZE	5
40	PAHZZ	5307-01-013-3088	19207	7084536	..STUD,PLAIN .003 OVERSIZE	1
40	PAHZZ	5307-01-013-3089	19207	7084537	..STUD,PLAIN .007 OVERSIZE	1
41	KDDZZ		19207	11684105-5	..BEARING,SLEEVE PART OF KIT P/N 5704485	1
42	XAHZZ		19207	11683973	.SCREEN,PRESSURE OIL	1
43	PAHZZ	5305-00-269-3242	80204	B1821BH038F200N	.SCREW,CAP,HEXAGON H	1
44	PAHZZ	5310-00-333-7348	19207	8679576	.WASHER,FLAT	1
45	XAHDD		19207	11683971	.HOUSING ASSEMBLY	1
46	PADZZ	5315-00-774-4699	19207	7744699	..PIN,STRAIGHT,HEADLE	1
47	KDDZZ		19207	11684107-2	..BEARING,SLEEVE PART OF KIT P/N 5704485	1
48	XADZZ		19207	11683965	..HOUSING	1

(1) ITEM NO.	(2) SMR CODE	(3) NSN	(4) CAGEC	(5) PART NUMBER	(6) DESCRIPTION AND USABLE ON CODES(UOC)	(7) QTY
49	PAHZZ	4710-01-296-0469	16128	11612239	..TUBE ASSEMBLY,METAL	2
50	PAHZZ	5325-01-073-2809	96906	MS21209F5-15	..INSERT,SCREW THREAD	4
51	KDDZZ		19207	11684105-2	..BEARING,SLEEVE PART OF KIT P/N 5704485	1
52	XAHZZ		19207	11684046	.IMPELLER	1
53	XAHZZ		19207	11683960	.SHAFT,OIL PUMP	1
54	PAHZZ	5310-00-185-6426	96906	MS19068-051	.NUT,PLAIN,ROUND	1
55	PAHZZ	5310-00-159-6495	96906	MS19070-051	.WASHER,KEY	1
56	PAHZZ	3110-00-144-8518	21450	700078	.BEARING,BALL,ANNULA	2
57	PAHZZ	3020-01-510-5419	19207	12468944	.GEAR CLUSTER	1
58	XAHZZ		19207	8725096	.WASHER,THRUST	1
59	PAHZZ	3120-00-510-4115	19207	11684104	.BEARING,WASHER,THRU	1

END OF FIGURE

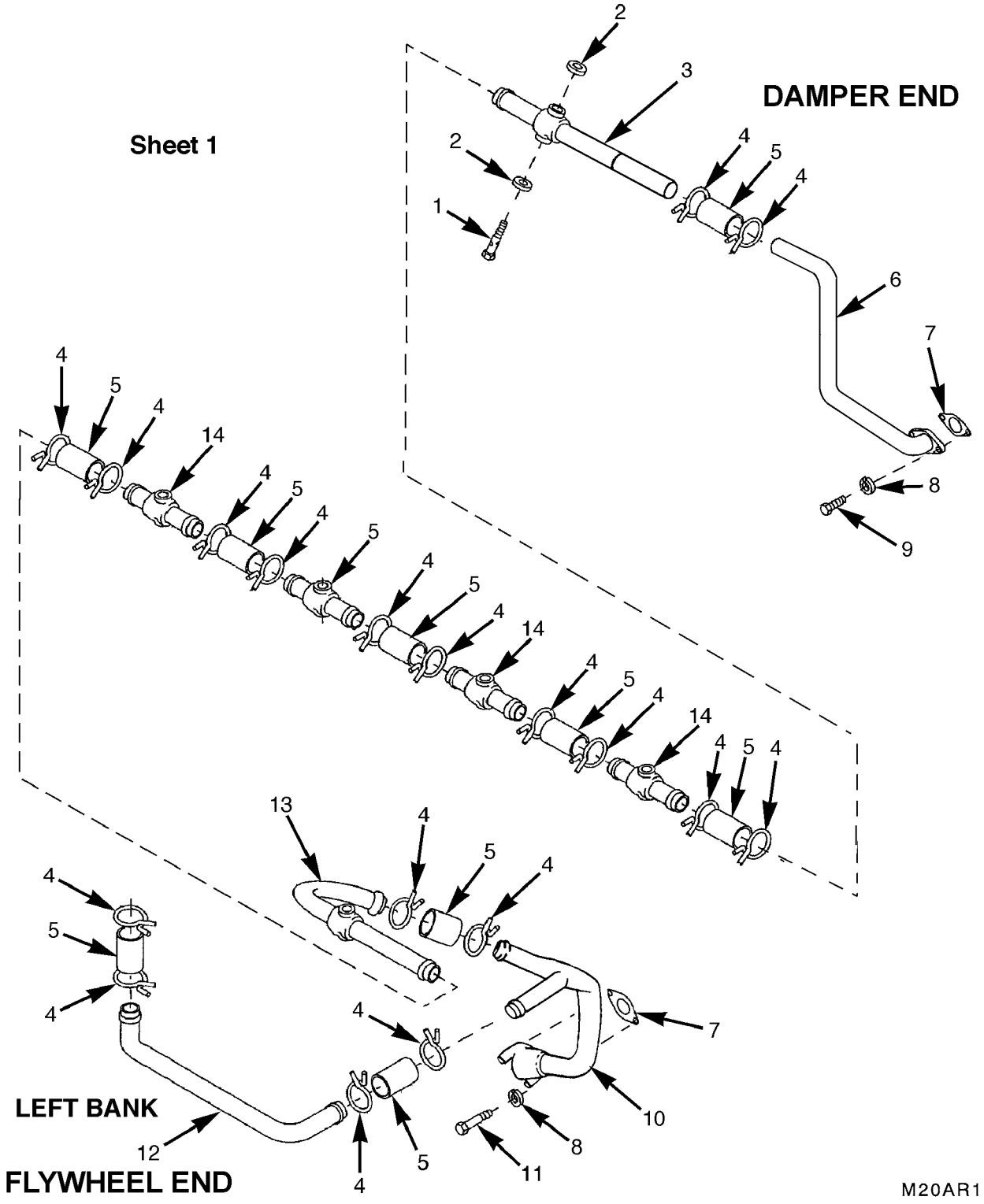

FIGURE 20. CYLINDER HEAD OIL DRAIN TUBES
(SHEET 1 OF 2)

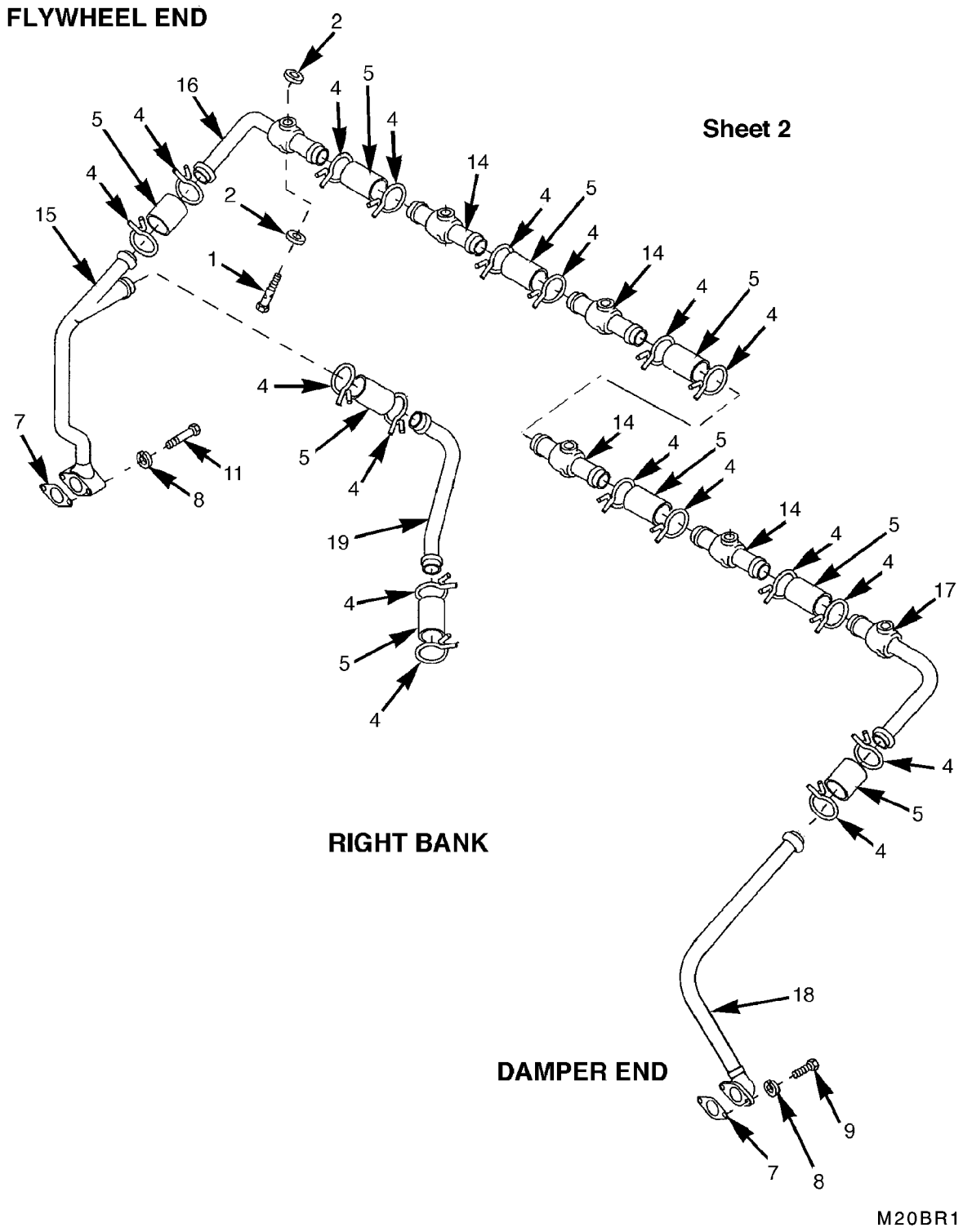

FIGURE 20. CYLINDER HEAD OIL DRAIN TUBES
(SHEET 2 OF 2)

(1) ITEM NO.	(2) SMR CODE	(3) NSN	(4) CAGEC	(5) PART NUMBER	(6) DESCRIPTION AND USABLE ON CODES(UOC)	(7) QTY
					GROUP 0106: ENGINE LUBRICATION SYSTEM	
					FIG.20 CYLINDER HEAD OIL DRAIN TUBES	
1	PAOZZ	4730-00-679-5682	19207	8761091	BOLT,FLUID PASSAGE	12
2	PAOZZ	5310-00-679-5685	02978	523557	WASHER,FLAT PART OF KIT P/N 5704488	24
3	PFOZZ	4710-00-833-8164	19207	10865180	TUBE ASSEMBLY,METAL	1
4	PAOZZ	4730-00-908-3198	83299	0612596-00	CLAMP,HOSE	36
5	MOOZZ		19207	7350206	HOSE,NONMETALLIC (MAKE FROM HOSE, NONMETALLIC P/N SCB85930)	V
6	PBOZZ	4710-01-510-6120	19207	12354398	TUBE,BENT,METALLIC	2
7	PAOZZ	5330-01-393-9091	63728	SC587195	GASKET PART OF KIT P/N 5704488	4
8	PAOZZ	5310-00-407-9566	96906	MS35338-45	WASHER,LOCK	8
9	PAOZZ	5305-01-407-9487	80204	B1821BH031F088N	SCREW,CAP,HEXAGON H	4
10	PBOZZ	4710-00-406-4623	19207	10883083	TUBE ASSEMBLY,METAL	1
11	PAOZZ	5306-00-051-4084	96906	MS90727-42	BOLT,MACHINE	4
12	PBOZZ	4710-00-561-7705	19207	11682624	TUBE,BENT,METALLIC UOC:EFR	1
12	PBOZZ	4710-00-477-9900	19207	8761059	TUBE,BENT,METALLIC UOC:2CA,2DA	1
13	PBOZZ	4710-00-071-8124	19207	8682753	TUBE ASSEMBLY,METAL	1
14	PBOZZ	2815-00-485-9555	19207	8761193	TUBE ASSEMBLY,OIL D	8
15	PAOZZ	4710-00-406-4622	19207	10865022	TUBE ASSEMBLY,METAL UOC:EFR,2DA	1
15	PAOZZ	4710-01-005-5237	19207	11684172	TUBE ASSEMBLY,METAL UOC:2CA	1
16	PBOZZ	4710-00-869-3595	02978	8761190	TUBE,BENT,METALLIC	1
17	PBOZZ	4710-00-073-5129	19207	8761192	TUBE,BENT,METALLIC	1
18	PAOZZ	4710-01-511-8944	19207	12354399	TUBE,BENT,METALLIC	1
19	PBOZZ	4710-01-048-3208	19207	11684195	TUBE,BENT,METALLIC UOC:EFR	1
19	PBOZZ	4710-00-477-9899	19207	8761052	TUBE,BENT,METALLIC UOC:2CA,2DA	1

END OF FIGURE

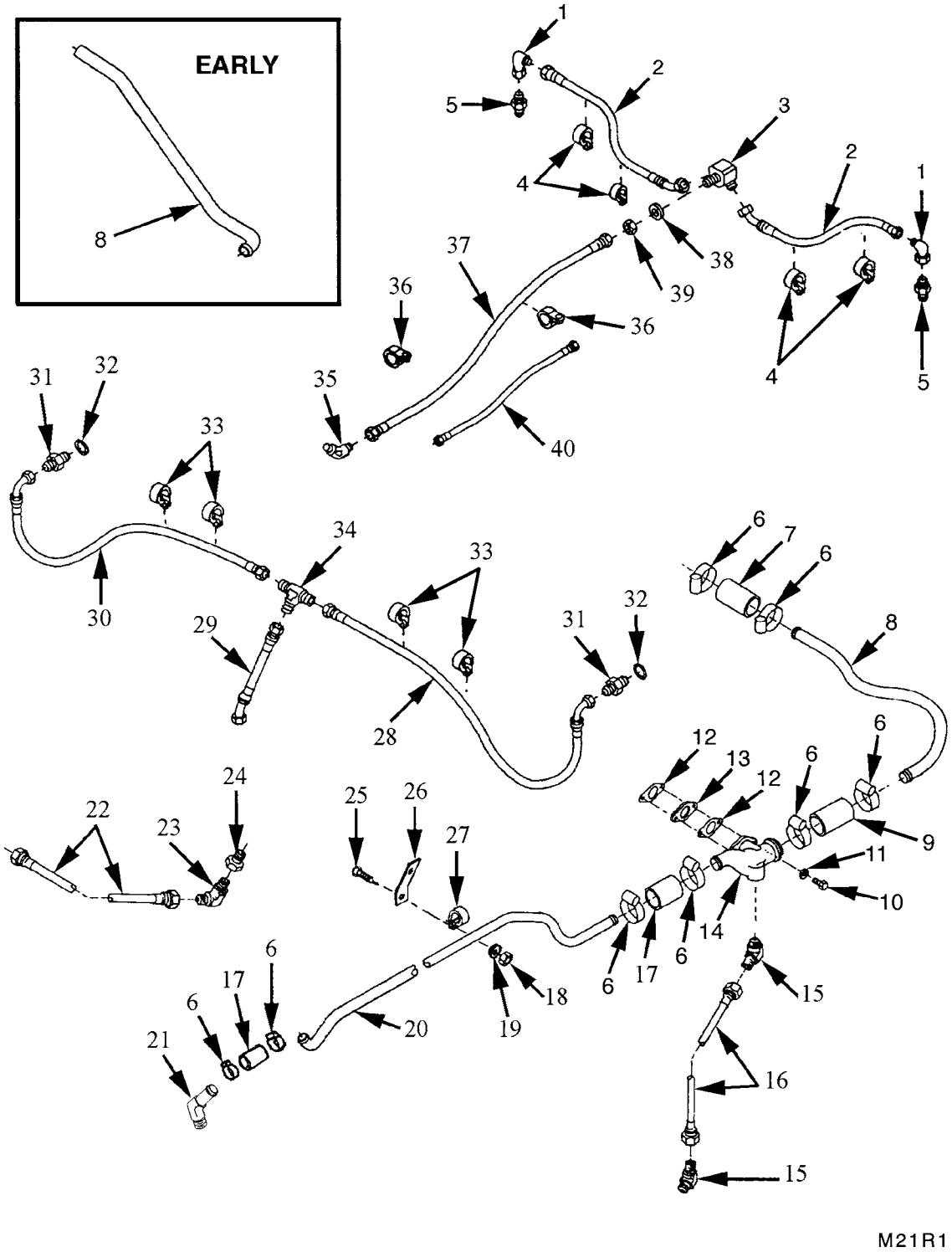

FIGURE 21. BREATHER TUBES, OIL SUPPLY HOSES, AND OIL COOLER VENT HOSES

(1) ITEM NO.	(2) SMR CODE	(3) NSN	(4) CAGEC	(5) PART NUMBER	(6) DESCRIPTION AND USABLE ON CODES(UOC)	(7) QTY
					GROUP 0106: ENGINE LUBRICATION SYSTEM	
					FIG.21 BREATHER TUBES, OIL SUPPLY HOSES, AND OIL COOLER VENT HOSES	
1	PBOZZ	4730-00-618-5372	81343	6-6 070221CA	ELBOW,TUBE	2
2	PAOZZ	4720-01-510-3322	96906	MS8005G405BC	HOSE ASSEMBLY,NONME	2
3	PBOZZ	4730-00-457-1984	19207	8761449	ELBOW,TUBE	1
4	PAOZZ	5340-00-057-3043	96906	MS21333-112	CLAMP,LOOP	4
5	PAOZZ	4730-00-995-1559	96906	MS51500A6	ADAPTER,STRAIGHT,PI	2
6	PAOZZ	4730-00-908-3193	56161	10503979	CLAMP	8
7	PAOZZ	4720-00-177-6186	19207	10898793-1	HOSE,AIR DUCT	1
8	PAOZZ	4710-00-401-4368	19207	10951368	TUBE,BENT,METALLIC	1
8	PBOZZ		19207	12354417	TUBE,BENT,METALLIC	1
9	PAOZZ	4720-00-896-6166	19207	10898794	HOSE,AIR DUCT	1
10	PAOZZ	5305-01-407-9487	80204	B1821BH031F088N	SCREW,CAP,HEXAGON H	2
11	PAOZZ	5310-00-167-0820	80205	NAS1149F0563P	WASHER,FLAT	2
12	PAOZZ	5330-00-678-5386	19207	8682770 NON-ASBE STOS	GASKET PART OF KIT P/N 5704488	2
13	PAOZZ	5365-00-533-6657	19207	11683964	SPACER,PLATE	1
14	PAOZZ	2815-01-513-6112	19207	12354470	BREATHER	1
15	PAOZZ	4730-01-171-1935	96906	MS51504B6	ELBOW,PIPE TO TUBE	2
16	PAOZZ		96906	MS8005G346BC	HOSE	1
17	PAOZZ	4720-01-512-8124	19207	12354476-1	HOSE,NONMETALLIC	2
18	PAOZZ	5310-00-088-0553	96906	MS21044N5	NUT,SELF-LOCKING,HE	2
19	PAOZZ	5310-00-167-0820	80205	NAS1149F0563P	WASHER,FLAT	1
20	PAOZZ	4710-01-511-5612	19207	12354475	TUBE,BENT,METALLIC UOC:EFR	1
21	PAOZZ	4730-00-277-1987	88044	AN844-20D	ELBOW,PIPE TO HOSE	1
22	PAOZZ	4720-00-875-5437	96906	MS8005F180A	HOSE ASSEMBLY,NONME UOC:EFR	1
23	PAOZZ	4730-01-010-6205	96906	MS20822-5S	ELBOW,PIPE TO TUBE UOC:EFR	1
24	PAOZZ	4730-00-873-0110	81343	6-2140140C	REDUCER,PIPE UOC:EFR	1
25	PAOZZ	5306-00-225-9088	96906	MS90726-33	BOLT,MACHINE	1
26	PAOZZ	5340-01-513-3844	19207	12354471	BRACKET,MOUNTING	1
27	PAOZZ	5340-00-151-9651	80205	MS21333-129	CLAMP,LOOP	1
28	PAOZZ	4720-00-459-2835	96906	MS8005E284C	HOSE ASSEMBLY,NONME	1
29	PAOZZ	4720-00-601-9351	96906	MS8005E060A	HOSE ASSEMBLY,NONME	2
30	PAOZZ	4720-01-155-5061	96906	MS8005E043B	HOSE ASSEMBLY,NONME	1
31	PAOZZ	4730-01-007-5232	96906	MS51525A4	ADAPTER,STRAIGHT,TU	2
32	PAOZZ	5331-00-166-0980	81349	M83248/1-012	O-RING PART OF KIT P/N 5704488	2
33	PAOZZ	5340-00-964-5267	96906	MS21333-120	CLAMP,LOOP	4
34	PAOZZ	4730-00-542-5906	96906	MS51510A4	TEE,TUBE	1
35	PAOZZ	4730-00-122-0526	96906	MS20823-10J	ELBOW,PIPE TO TUBE	1
36	PAOZZ	5340-00-725-5280	80205	NASM12333	CLAMP,LOOP	2
37	PAOZZ	4720-00-410-1184	19207	8761491-3	HOSE ASSEMBLY,NONME	1
38	PAOZZ	5310-01-429-5082	80205	NAS1149F1490P	WASHER,FLAT	1
39	PAOZZ	5310-00-145-1650	88044	AN924-10	NUT,PLAIN,HEXAGON	1
40	PAOZZ	4720-00-410-1231	19207	8761502-2	HOSE ASSEMBLY,NONME	1

END OF FIGURE

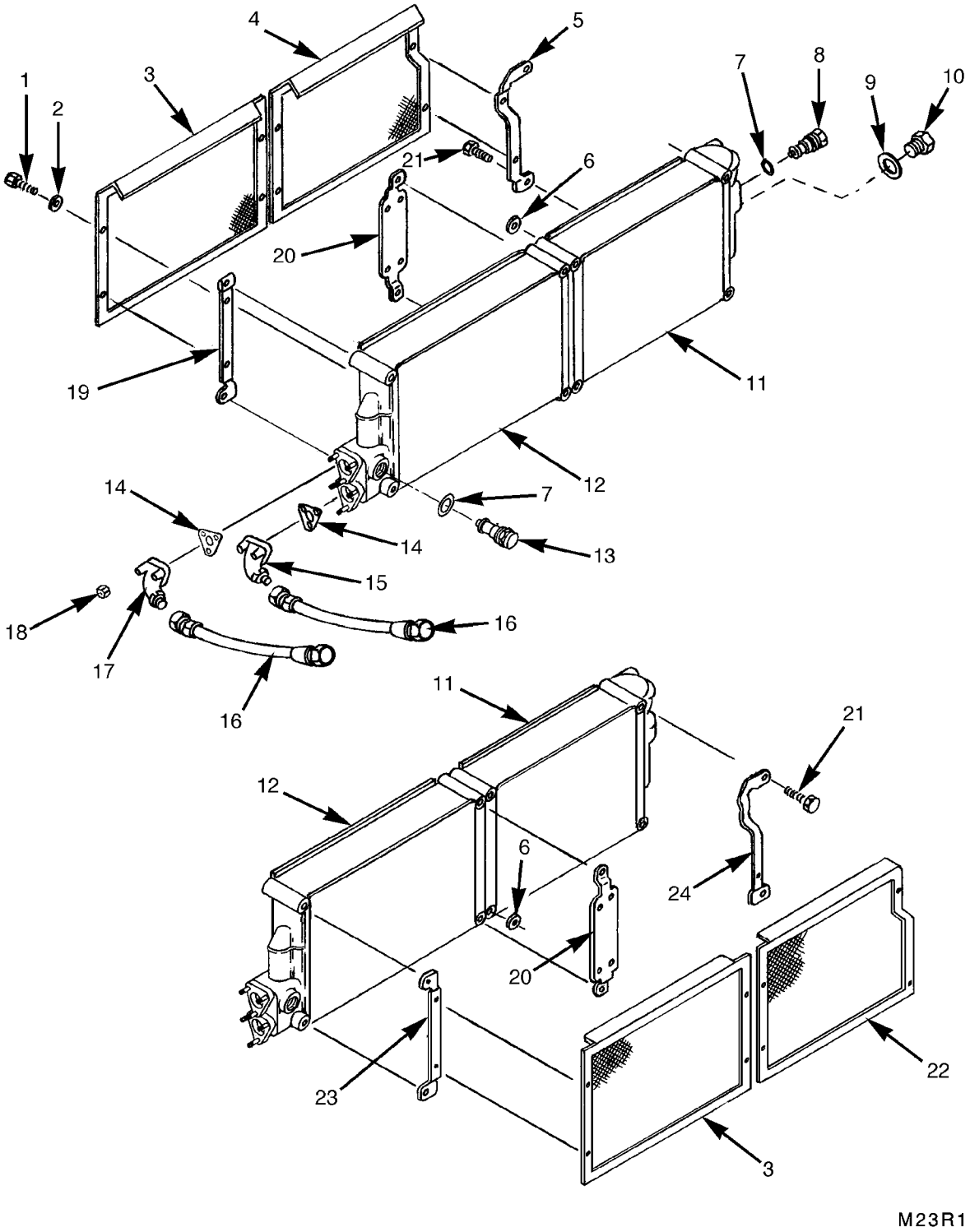

FIGURE 22. OIL COOLERS AND OIL COOLER SCREENS

(1) ITEM NO.	(2) SMR CODE	(3) NSN	(4) CAGEC	(5) PART NUMBER	(6) DESCRIPTION AND USABLE ON CODES(UOC)	(7) QTY
					GROUP 0106: ENGINE LUBRICATION SYSTEM	
					FIG.22 OIL COOLERS AND OIL COOLER SCREENS	
1	PAOZZ	5305-00-042-5640	24617	425640	SCREW,ASSEMBLED WAS	16
2	PAOZZ	5310-00-081-4219	96906	MS27183-12	WASHER,FLAT	8
3	PAOZZ	2930-00-392-9555	19207	11684085	SCREEN,ENGINE OIL C	2
4	PAOZZ	2520-00-397-3324	19207	11684070-2	SCREEN,TRANSMISSION	1
5	PBOZZ	5340-00-394-9717	19207	11684082-2	BRACKET,MOUNTING	1
6	PAOZZ	5310-00-184-8992	96906	MS9320-14	WASHER,FLAT	4
7	PAOZZ	5365-00-740-3580	19207	7403580	SPACER,RING PART OF KIT P/N 5704488	4
8	PAOZZ	6685-00-734-6573	55193	VD-109106	THERMOSTAT,FLOW CON	2
9	PAOZZ	5331-00-166-0980	81349	M83248/1-012	O-RING PART OF KIT P/N 5704488 UOC:EFR	2
9	PAOZZ	5331-00-166-0980	81349	M83248/1-012	O-RING PART OF KIT P/N 5704488 UOC:2CA,2DA	1
10	PAOZZ	5365-00-287-0094	88044	AN814-4D	PLUG,MACHINE THREAD UOC:EFR	2
10	PAOZZ	5365-00-287-0094	88044	AN814-4D	PLUG,MACHINE THREAD UOC:2CA,2DA	1
11	PAODD	2520-01-162-7035	61228	10001A	COOLER,FLUID,TRANSM	2
12	PAODD	2930-01-024-6706	78385	10595A	CORE ASSEMBLY,FLUID	2
13	PAOZZ	6620-01-050-2086	19207	8357819-1	THERMOSTAT,FLOW CON	2
14	PAOZZ	5330-00-678-4669	19207	8682679	GASKET PART OF KIT P/N 5704488	4
15	PAOZZ	4730-01-101-4110	19207	12254380	ADAPTER,STRAIGHT,FL UOC:2CA,2DA	1
16	PAOZZ	4720-00-766-0903	96906	MS8005M144A	HOSE ASSEMBLY,NONME	4
17	PAOZZ	4320-00-392-9514	19207	11683952	CONNECTOR,FLUID,PUM UOC:2CA,2DA	3
17	PAOZZ	4320-00-392-9514	19207	11683952	CONNECTOR,FLUID,PUM UOC:EFR	4
18	PAOZZ	5310-00-088-0553	96906	MS21044N5	NUT,SELF-LOCKING,HE	12
19	PBOZZ	2930-00-392-9559	19207	11684049	BRACKET,OIL COOLER	1
20	PAOZZ	5342-00-392-9564	19207	11684051	BRACKET,ENGINE ACCE	2
21	PAOZZ	5305-00-719-5279	96906	MS90727-129	SCREW,CAP,HEXAGON H	16
22	PAOZZ	2520-00-394-9714	19207	11684070-1	SCREEN,TRANSMISSION	1
23	PBOZZ	5342-00-392-9588	19207	11684050	BRACKET,ENGINE ACCE	1
24	PBOZZ	5340-00-475-8217	19207	11684082-1	BRACKET,MOUNTING	1

END OF FIGURE

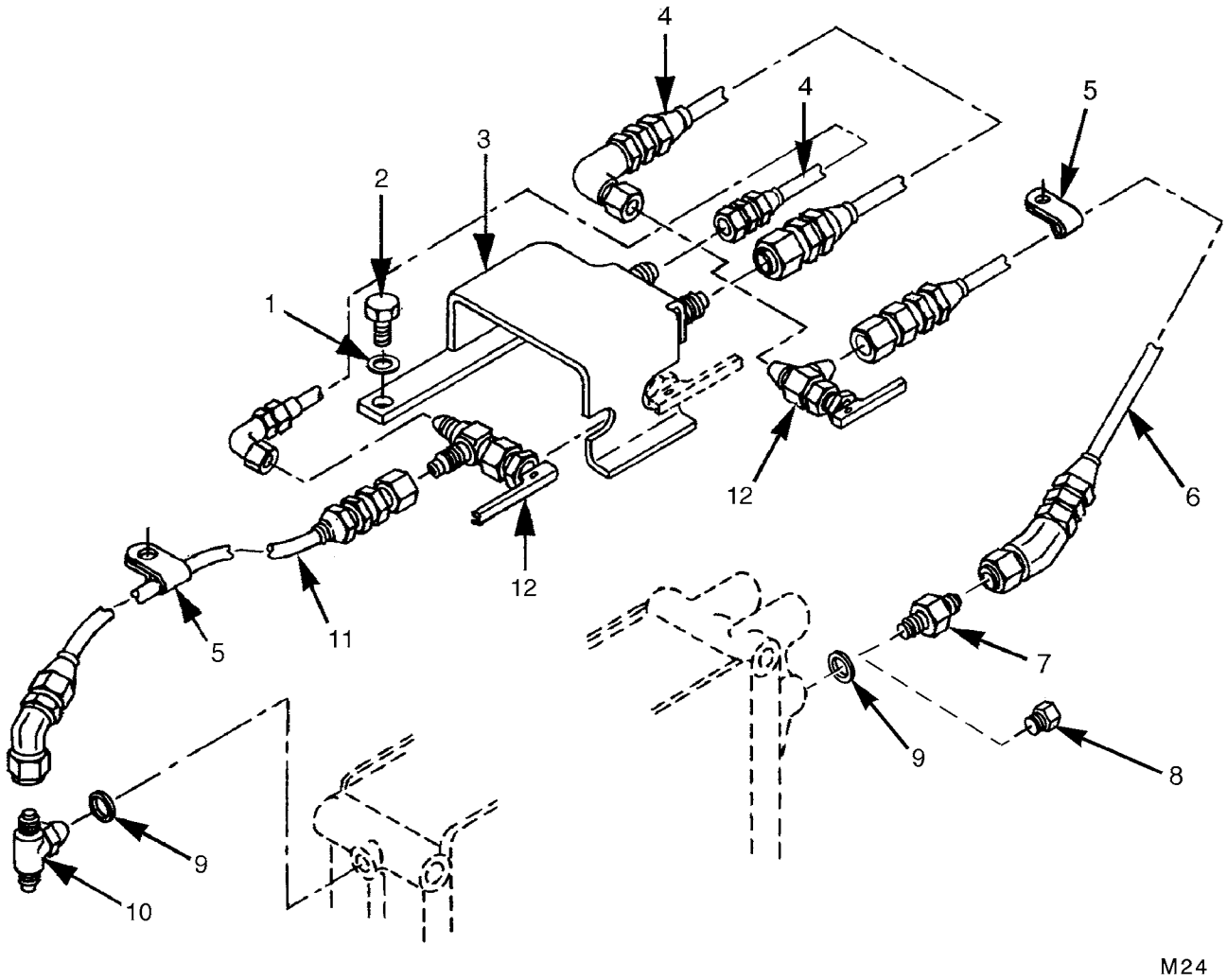

FIGURE 23. OIL SAMPLING SYSTEM (MODELS AVDS-1790-2CA AND AVDS-1790-2DA)

(1) ITEM NO.	(2) SMR CODE	(3) NSN	(4) CAGEC	(5) PART NUMBER	(6) DESCRIPTION AND USABLE ON CODES(UOC)	(7) QTY
					GROUP 0106: ENGINE LUBRICATION SYSTEM	
					FIG.23 OIL SAMPLING SYSTEM (MODELS AVDS-1790-2CA AND AVDS-1790-2DA)	
1	PAOZZ	5310-00-514-6674	96906	MS35335-34	WASHER,LOCK. UOC:2CA,2DA	2
2	PAOZZ		80204	B1821BH031F075H	BOLT,MACHINE UOC:2CA,2DA	2
3	PAOZZ	5342-01-157-8846	19207	12314626	BRACKET,ENGINE ACCE UOC:2CA,2DA	1
4	PAOZZ	4720-01-167-0742	00624	AE3660120E0310	HOSE ASSEMBLY,NONME UOC:2CA,2DA	2
5	PAOZZ	5340-00-738-5174	19207	7385174	CLAMP,LOOP UOC:2CA,2DA	4
6	PAOZZ	4720-01-163-3219	00624	AE3660060E0270	HOSE ASSEMBLY,NONME UOC:2CA,2DA	1
7	PAOZZ	4730-01-007-5232	96906	MS51525A4	ADAPTER,STRAIGHT,TU. UOC:2CA,2DA	1
8	PAOZZ	5365-00-287-0094	88044	AN814-4D	PLUG,MACHINE THREAD . . . . . UOC:EFR	2
9	PAOZZ	5331-00-166-0980	81349	M83248/1-012	O-RING PART OF KIT P/N 5704488 . . . . . UOC:2CA,2DA	2
9	PAOZZ	5331-00-166-0980	81349	M83248/1-012	O-RING PART OF KIT P/N 5704488 . . . . . UOC:EFR	2
10	PAOZZ	4730-00-116-6686	96906	MS51529A4	TEE,TUBE TO BOSS UOC:2CA,2DA	1
11	PAOZZ	4720-01-163-1093	00624	AE3660060E0300	HOSE ASSEMBLY,NONME UOC:2CA,2DA	1
12	PAOZZ	4820-01-163-7156	19207	11669771	COCK,DRAIN. UOC:2CA,2DA	2

END OF FIGURE

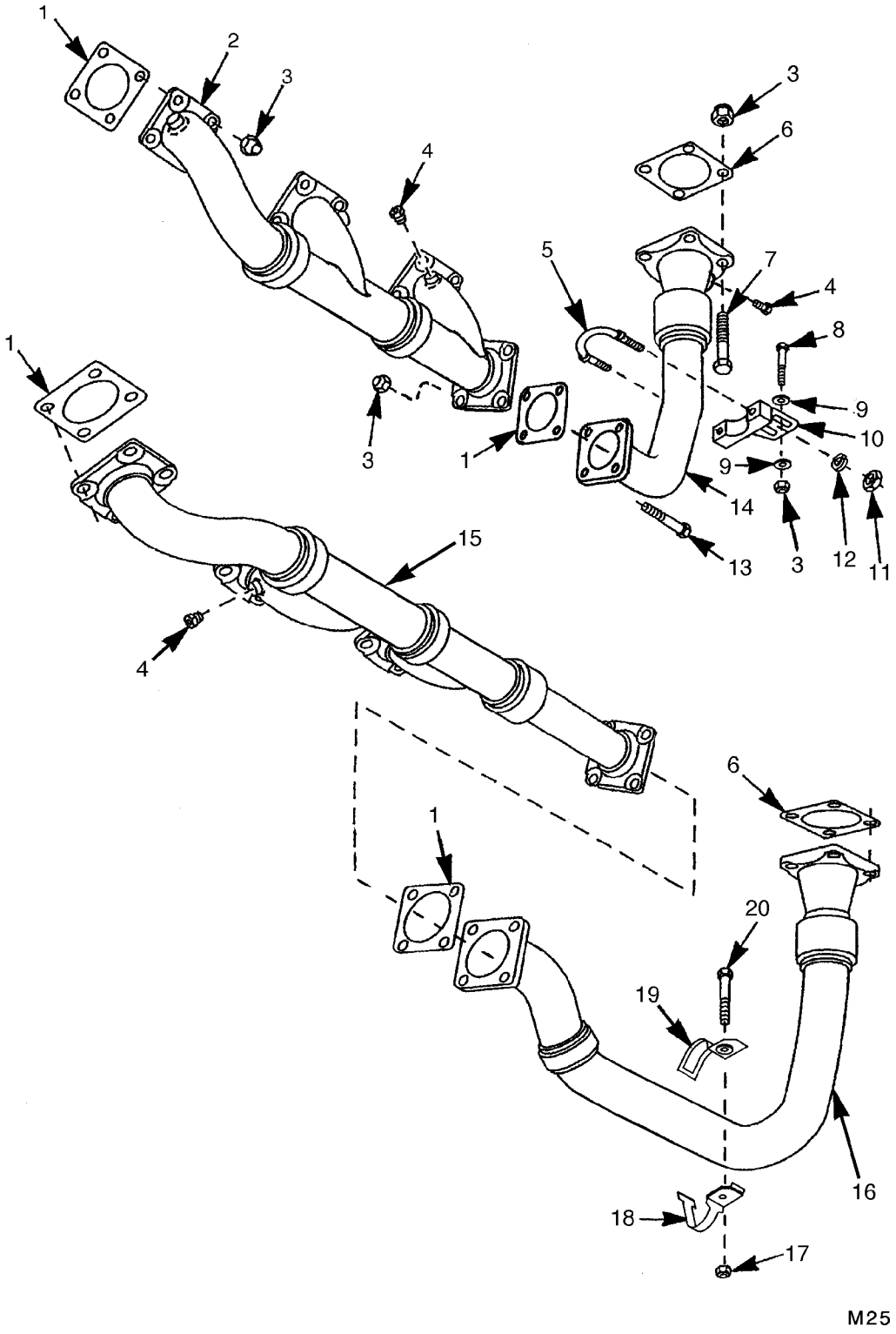

FIGURE 24. EXHAUST MANIFOLDS (LEFT BANK)

(1) ITEM NO.	(2) SMR CODE	(3) NSN	(4) CAGEC	(5) PART NUMBER	(6) DESCRIPTION AND USABLE ON CODES(UOC)	(7) QTY
					GROUP 0108: MANIFOLDS	
					FIG.24 EXHAUST MANIFOLDS (LEFT BANK)	
1	PAFZZ	5330-01-386-8530	19207	8761547 NON-ASBE STOS	GASKET PART OF KIT P/N 5704488	8
2	PAFZZ	2815-00-392-9420	19207	11683989	MANIFOLD,EXHAUST CYLINDER NO.4,5,6.	1
3	PAOZZ	5310-01-151-2732	15653	SPL51712-6	NUT,SELF-LOCKING,HE	42
4	PAFZZ	4730-00-541-7749	96906	MS27769S2	PLUG,PIPE	7
5	PAOZZ	5306-01-433-4086	19207	12354419	BOLT,U.	1
6	PAFZZ	5330-00-678-3270	19207	8682505	GASKET PART OF KIT P/N 5704488	2
7	PAFZZ	5305-00-531-1097	80205	MS35308-365	SCREW,CAP,HEXAGON H UOC:EFR	8
7	PAFZZ	5305-00-531-1097	80205	MS35308-365	SCREW,CAP,HEXAGON H UOC:2CA,2DA	4
8	PAOZZ	5305-00-269-3238	80204	B1821BH038F125N	SCREW,CAP,HEXAGON H	2
9	PAOZZ	5310-00-776-7318	19207	7767318	WASHER,FLAT	4
10	PAOZZ		19207	12354418	BRACKET,ANGLE	1
11	PAFZZ	5310-00-905-4600	96906	MS51968-6	NUT,PLAIN,HEXAGON	2
12	PAOZZ	5310-00-407-9566	96906	MS35338-45	WASHER,LOCK.	2
13	PAFZZ	5305-00-685-3510	80205	MS35308-361	SCREW,CAP,HEXAGON H	8
14	PAFZZ	2990-00-604-7366	19207	11683992	PIPE,EXHAUST CYLINDER NO.4,5,6 UOC:2CA,2DA	1
14	PAFZZ	2990-01-017-5186	19207	11684193	PIPE,EXHAUST CYLINDER NO.4,5,6 UOC:EFR	1
15	PAFZZ	2815-00-388-9988	19207	11683987	MANIFOLD,EXHAUST CYLINDER NO.1,2,3.	1
16	PAFZZ	2990-00-397-3374	19207	11683991	PIPE,EXHAUST CYLINDER NO.1,2,3 UOC:2CA,2DA	1
16	PAFZZ	2990-01-085-3831	19207	11684185-1	PIPE,EXHAUST CYLINDER NO.1,2,3 UOC:EFR	1
17	PAOZZ	5310-00-059-9264	96906	MS21045-C6	NUT,SELF-LOCKING,HE	2
18	PBOZZ	5340-01-010-9348	19207	11684236	STRAP,RETAINING.	2
19	PBOZZ	5340-01-010-9347	19207	11684235	STRAP,RETAINING.	2
20	PAOZZ	5305-00-269-3240	80204	B1821BH038F150N	SCREW,CAP,HEXAGON H	2

END OF FIGURE

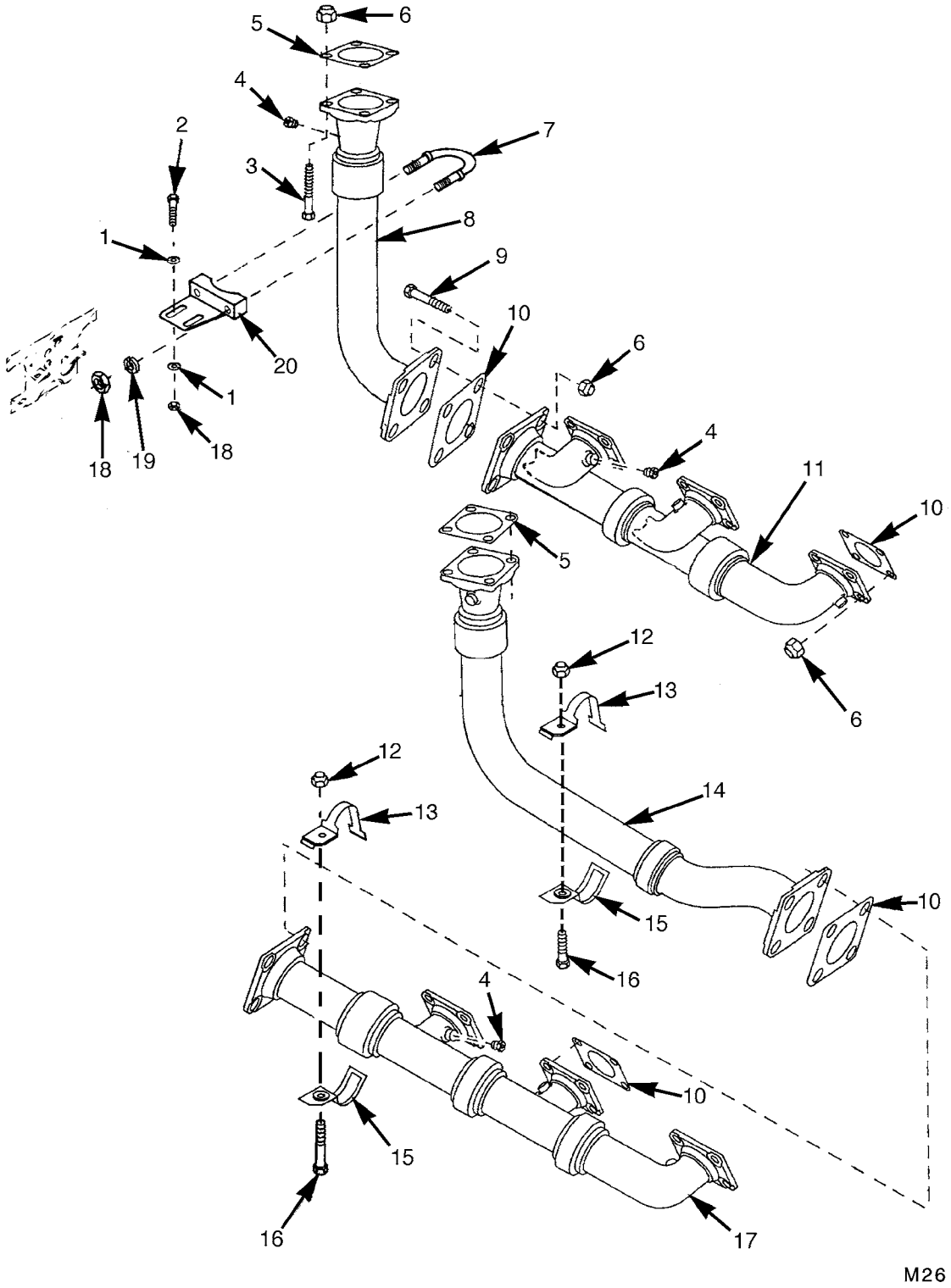

FIGURE 25. EXHAUST MANIFOLDS (RIGHT BANK)

(1) ITEM NO.	(2) SMR CODE	(3) NSN	(4) CAGEC	(5) PART NUMBER	(6) DESCRIPTION AND USABLE ON CODES(UOC)	(7) QTY
					GROUP 0108: MANIFOLDS	
					FIG.25 EXHAUST MANIFOLDS (RIGHT BANK)	
1	PAOZZ	5310-00-776-7318	19207	7767318	WASHER,FLAT	4
2	PAOZZ	5305-00-269-3238	80204	B1821BH038F125N	SCREW,CAP,HEXAGON H	2
3	PAFZZ	5305-00-531-1097	80205	MS35308-365	SCREW,CAP,HEXAGON H UOC:EFR	8
3	PAFZZ	5305-00-531-1097	80205	MS35308-365	SCREW,CAP,HEXAGON H UOC:2CA,2DA	4
4	PAFZZ	4730-00-541-7749	96906	MS27769S2	PLUG,PIPE	7
5	PAFZZ	5330-00-678-3270	19207	8682505	GASKET PART OF KIT P/N 5704488	2
6	PAOZZ	5310-01-151-2732	15653	SPL51712-6	NUT,SELF-LOCKING,HE	42
7	PAOZZ	5306-01-433-4086	19207	12354419	BOLT,U	1
8	PAFZZ	2990-00-389-0197	19207	11683994	PIPE,EXHAUST CYLINDER NO.4,5,6 UOC:2CA,2DA	1
8	PAFZZ	2990-01-017-5187	19207	11684194	PIPE,EXHAUST CYLINDER NO.4,5,6 UOC:EFR	1
9	PAFZZ	5305-00-685-3510	80205	MS35308-361	SCREW,CAP,HEXAGON H	8
10	PAFZZ	5330-01-386-8530	19207	8761547 NON-ASBESTOS	GASKET PART OF KIT P/N 5704488	8
11	PAFZZ	2815-00-392-9426	19207	11683990	MANIFOLD,EXHAUST CYLINDER NO.4,5,6.	1
12	PAOZZ	5310-00-059-9264	96906	MS21045-C6	NUT,SELF-LOCKING,HE	2
13	PBOZZ	5340-01-010-9348	19207	11684236	STRAP,RETAINING	2
14	PAFZZ	2990-00-397-3383	19207	11683993	PIPE,EXHAUST CYLINDER NO.1,2,3 UOC:2CA,2DA	1
14	PAFZZ	2990-01-085-3832	19207	11684187-1	PIPE,EXHAUST CYLINDER NO.1,2,3 UOC:EFR	1
15	PBOZZ	5340-01-010-9347	19207	11684235	STRAP,RETAINING	2
16	PAOZZ	5305-00-269-3240	80204	B1821BH038F150N	SCREW,CAP,HEXAGON H	2
17	PAFZZ	2815-00-388-9992	19207	11683988	MANIFOLD,EXHAUST CYLINDER NO.1,2,3.	1
18	PAFZZ	5310-00-905-4600	96906	MS51968-6	NUT,PLAIN,HEXAGON	2
19	PAOZZ	5310-00-407-9566	96906	MS35338-45	WASHER,LOCK	2
20	PBOZZ	5340-01-440-1429	19207	12354418-2	BRACKET,ANGLE	1

END OF FIGURE

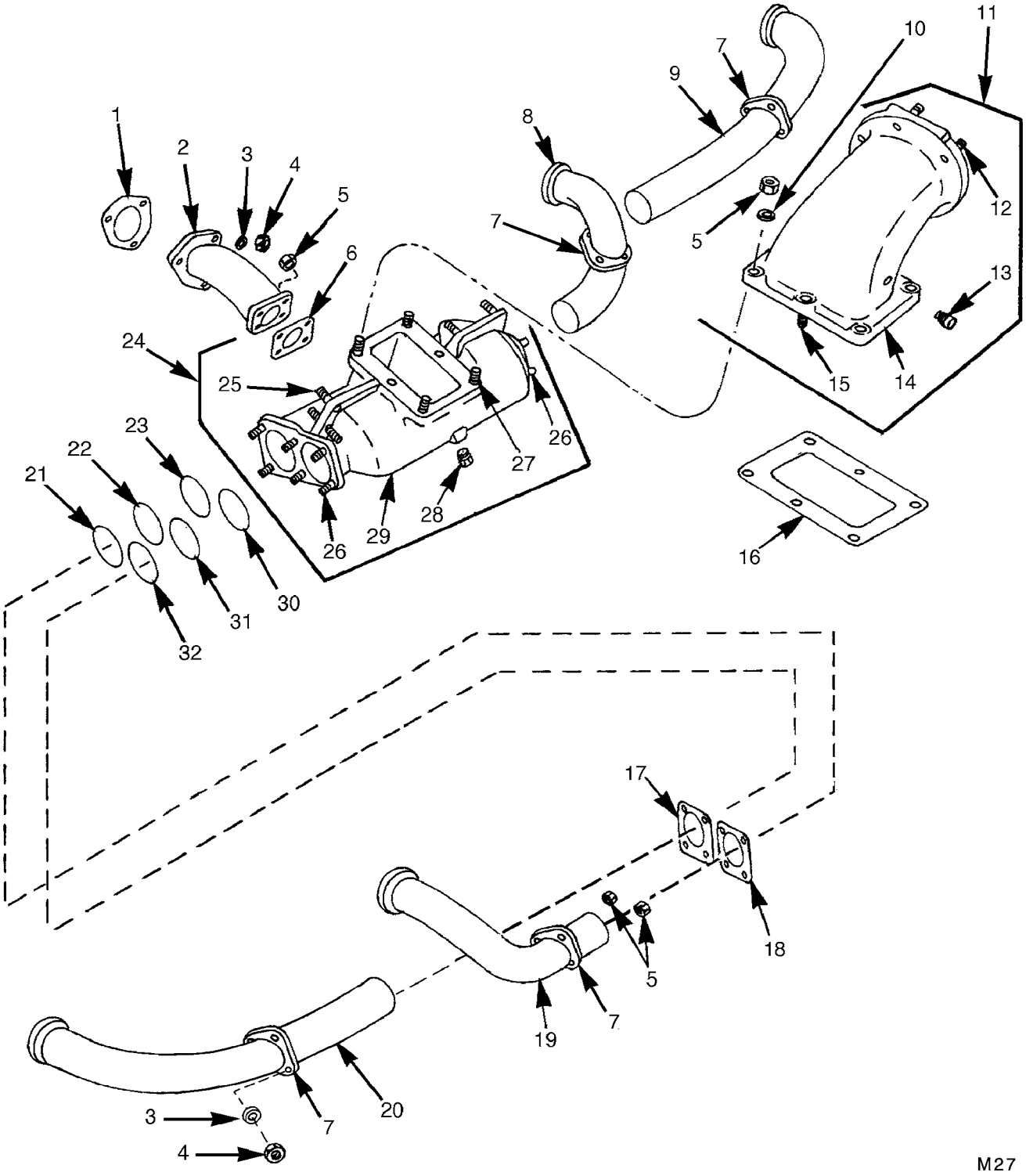

FIGURE 26. INTAKE MANIFOLD AND TUBES

(1) ITEM NO.	(2) SMR CODE	(3) NSN	(4) CAGEC	(5) PART NUMBER	(6) DESCRIPTION AND USABLE ON CODES(UOC)	(7) QTY
					GROUP 0108: MANIFOLDS	
					FIG.26 INTAKE MANIFOLD AND TUBES	
1	PAFZZ	5330-01-347-8164	79788	8682800	GASKET	12
2	PBFZZ	4710-00-679-5668	19207	8761021	TUBE ASSEMBLY,METAL	4
3	PAFZZ	5310-00-407-9566	96906	MS35338-45	WASHER,LOCK	36
4	PAFZZ	5310-00-905-4600	96906	MS51968-6	NUT,PLAIN,HEXAGON	36
5	PAFZZ	5310-00-088-0553	80205	MS21044N5	NUT,SELF-LOCKING,HE	52
6	PAFZZ	5330-00-679-7063	63728	529312	GASKET PART OF KIT P/N 5704488	4
7	PBFZZ	4730-00-406-7307	19207	8682799	FLANGE,PIPE	8
8	PBFZZ	4710-00-679-5666	19207	8761158	TUBE,BENT,METALLIC	2
9	PBFZZ	4710-00-679-5665	19207	8761159	TUBE ASSEMBLY,METAL	2
10	PAFZZ	5310-00-167-0820	80205	NAS1149F0563P	WASHER,FLAT	12
11	PBFFF	4730-00-177-8243	19207	8761156	ELBOW,FLANGE	2
12	PAFZZ	5307-00-776-7804	19207	7767804	.STUD,PLAIN .003 OVERSIZE	6
12	PAFZZ	5307-00-776-7805	19207	7767805	.STUD,PLAIN .007 OVERSIZE	6
13	PAFZZ	4730-00-044-4689	28839	401752	.PLUG,PIPE	2
14	XAFZZ		19207	8761046	.ELBOW,MANIFOLD	1
15	PAFZZ	5307-00-272-6331	19207	8365809	.STUD,PLAIN .003 OVERSIZE	2
15	PAFZZ	5307-00-272-6332	19207	8365810	.STUD,PLAIN .007 OVERSIZE	2
16	PAFZZ	5330-00-679-7064	19207	8682769	GASKET PART OF KIT P/N 5704488	2
17	PBFZZ	4730-00-406-7308	19207	8761138	FLANGE,PIPE	4
18	PBFZZ	4730-00-406-4609	19207	8761137	FLANGE,PIPE	4
19	PAFZZ	4710-01-049-8930	19207	11684231	TUBE,BENT,METALLIC UOC:EFR	1
19	PBFZZ	4710-00-679-5664	19207	8761160	TUBE,BENT,METALLIC	2
20	PBFZZ	4710-00-679-5667	19207	8761157	TUBE ASSEMBLY,METAL	2
21	PAFZZ	5310-00-679-9880	02978	586967	WASHER,SPRING TENSI	4
22	PAFZZ	5365-00-205-9307	19207	8698764	SPACER,RING	4
23	PAFZZ	5330-01-160-4348	81349	M83461/1-335	PACKING,PREFORMED PART OF KIT P/N 5704488	4
24	PAFFF	2815-01-146-9005	19207	8761045	MANIFOLD,INTAKE	2
25	PAFZZ	5307-00-801-5295	28839	402044	.STUD,PLAIN STANDARD	8
25	PAFZZ	5307-00-679-5684	28839	402044H	.STUD,PLAIN .003 OVERSIZE	8
25	PAFZZ	5307-00-801-4819	28839	402044P007	.STUD,PLAIN .007 OVERSIZE	8
26	PAFZZ	5307-01-149-5845	19207	7403067	.STUD,PLAIN STANDARD	12
26	PAFZZ	5307-00-776-7804	19207	7767804	.STUD,PLAIN .003 OVERSIZE	12
26	PAFZZ	5307-00-776-7805	19207	7767805	.STUD,PLAIN .007 OVERSIZE	12
27	PAFZZ	5307-01-144-8861	19207	8365686	.STUD,PLAIN STANDARD	4
27	PAFZZ	5307-00-272-6331	19207	8365809	.STUD,PLAIN .003 OVERSIZE	4
27	PAFZZ	5307-00-272-6332	19207	8365810	.STUD,PLAIN .007 OVERSIZE	4
28	PAFZZ	4730-00-044-4689	28839	401752	.PLUG,PIPE	1
29	XDFZZ		19207	8761033	.MANIFOLD,INTAKE	1
30	PAFZZ	5331-00-167-5157	81349	M83248/1-331	O-RING PART OF KIT P/N 5704488	4
31	PAFZZ	5365-00-209-0174	19207	8698689	SPACER,RING	4
32	PAFZZ	5310-00-637-3057	19207	8698690	WASHER,SPRING TENSI	4

END OF FIGURE

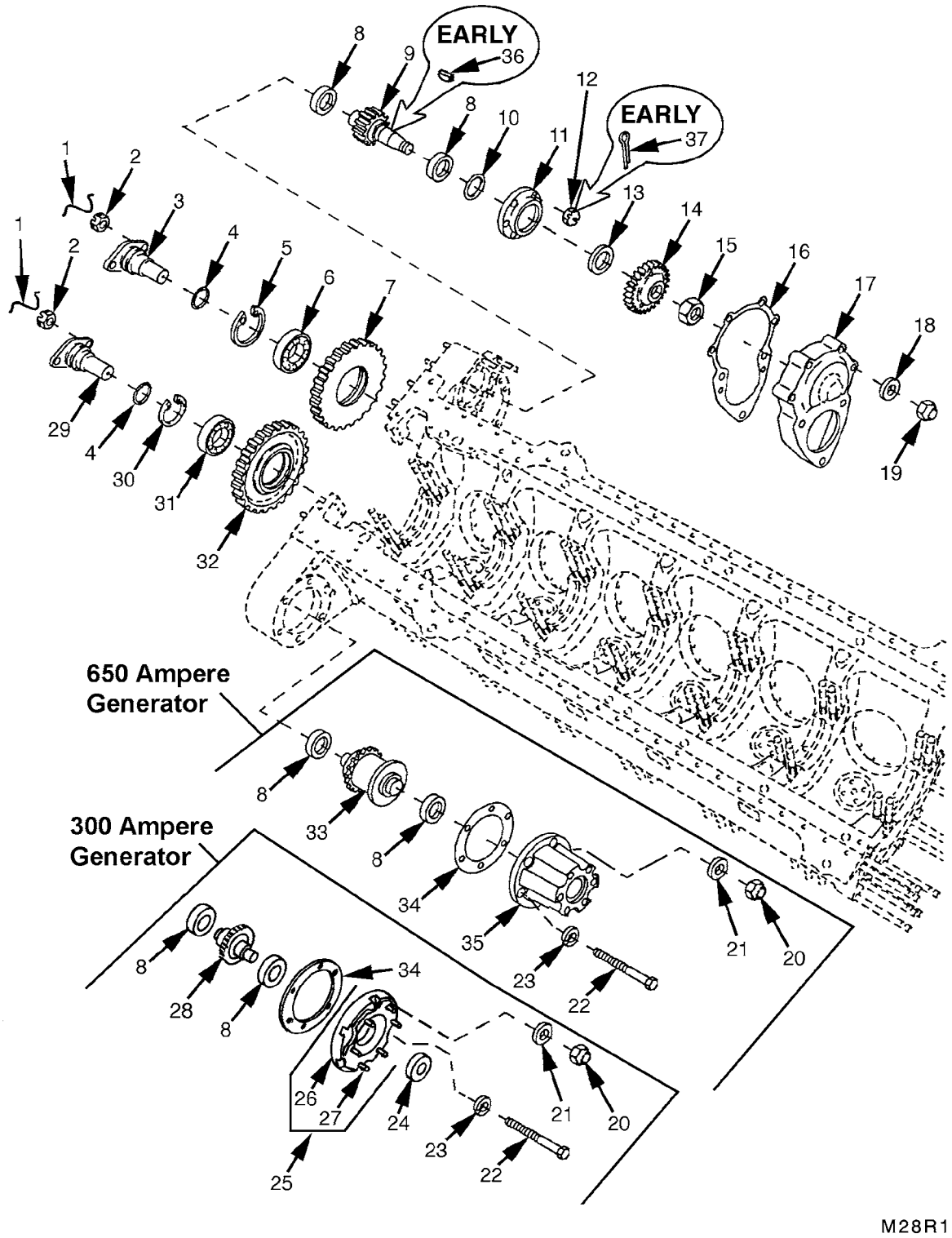

FIGURE 27. GENERATOR AND STARTER DRIVEN IDLER GEARS AND SHAFTS

(1) ITEM NO.	(2) SMR CODE	(3) NSN	(4) CAGEC	(5) PART NUMBER	(6) DESCRIPTION AND USABLE ON CODES(UOC)	(7) QTY
					GROUP 0109: ACCESSORY DRIVING MECHANISMS	
					FIG.27 GENERATOR AND STARTER DRIVEN IDLER GEARS AND SHAFTS	
1	MHHZZ		96906	MS20995NC40-12	WIRE,NONELECTRICAL (MAKE FROM WIRE, NONELECTRICAL P/N NASM20995NC40)	4
2	PAHZZ	5310-00-401-0825	96906	MS35692-14	NUT,PLAIN,SLOTTED,H	4
3	PAHZZ	3040-00-861-1448	19207	10898915	SHAFT,SHOULDERED	4
4	PAHZZ	5331-00-913-4697	96906	MS28775-223	O-RING PART OF KIT P/N 5704488	2
5	PAHZZ	5325-00-260-4875	96906	MS16625-1354	RING,RETAINING	1
6	PAHZZ	3110-00-155-6675	01212	1406	BEARING,BALL,ANNULA	1
7	PAHZZ	3020-00-851-9176	19207	10898777	GEAR,SPUR	1
8	PAHZZ	3110-00-516-5490	21450	700080	BEARING,BALL	4
9	PAHZZ	3040-00-861-1447	02978	10898779	GEARSHAFT,SPUR	1
10	PAHZZ	5331-00-579-6861	96906	MS28775-236	O-RING PART OF KIT P/N 5704488	1
11	PAHZZ	3130-00-937-1467	19207	8761022	HOUSING,BEARING UNI	1
12	PAHZZ	5310-00-660-3381	96906	MS21083N5	NUT,SELF-LOCKING,HE	6
13	PAHZZ	5330-00-492-1774	19207	11668614	SEAL,PLAIN ENCASED PART OF KIT P/N 5704488	1
14	PBHZZ	3020-00-678-4238	19207	8682691	GEAR,SPUR	1
15	PAHZZ	5310-00-655-9859	19207	8761273	NUT,PLAIN,SLOTTED,H	1
16	PAHZZ	5330-00-438-1861	19207	10912558	GASKET PART OF KIT P/N 5704488	1
17	PBHZZ	5340-00-498-2398	19207	8725275	BRACKET,MOUNTING	1
18	PAHZZ	5310-00-333-7348	19207	8679576	WASHER,FLAT	4
19	PAHZZ	5310-00-959-1488	81349	M45913/2-6FG5C	NUT,SELF-LOCKING,HE	4
20	PAHZZ	5310-00-088-0552	80205	MS21044N7	NUT,SELF-LOCKING,HE	1
21	PAHZZ	5310-01-391-7138	80205	NAS1149F0763P	WASHER,FLAT	1
22	PAHZZ		80204	B1821BH044F500N	SCREW,CAP,HEXAGON H	5
23	PAHZZ	5310-00-655-9370	96906	MS35340-47	WASHER,LOCK	5
24	PAFZZ	5330-00-492-1776	19207	11668628	SEAL,PLAIN ENCASED PART OF KIT P/N 5704488 UOC:EFR,2DA	1
25	PBHHH	2920-00-177-7844	19207	10882773	ADAPTER,GENERATOR UOC:EFR,2DA	1
26	XAHZZ		19207	10882749	.ADAPTER,GENERATOR UOC:EFR,2DA	1
27	PAHZZ	5307-00-741-5384	19207	7415384	.STUD,PLAIN .003 OVERSIZE UOC:EFR,2DA	6
27	PAHZZ	5307-01-113-4110	19207	7415385	.STUD,PLAIN .007 OVERSIZE UOC:EFR,2DA	6
28	PBHZZ	3040-00-678-4236	19207	8682814	GEARSHAFT,SPUR UOC:EFR,2DA	1
29	PBHZZ	3040-00-678-4233	19207	8761440	SHAFT,SHOULDERED	1
30	PAHZZ	5365-00-822-2136	96906	MS16625-1281	RING,RETAINING	1
31	PAHZZ	3110-00-156-5443	13932	D9D5306	BEARING,BALL,ANNULA	1
32	PBHZZ	3020-00-678-4239	19207	8682689	GEAR,SPUR	1
33	PBHZZ	3020-00-398-6713	19207	11682722	GEAR-SLIP CLUTCH,SP UOC:2CA	1
34	KFHZZ		19207	8761081	GASKET PART OF KIT P/N 5704488	1
35	PBHZZ	3040-00-397-3319	19207	11642079	HOUSING,MECHANICAL UOC:2CA	1
36	PAHZZ	5315-00-012-4553	80205	MS35756-17	KEY,WOODRUFF	1
37	PAHZZ	5315-00-019-0777	80205	MS24665-291	PIN,COTTER	1

END OF FIGURE

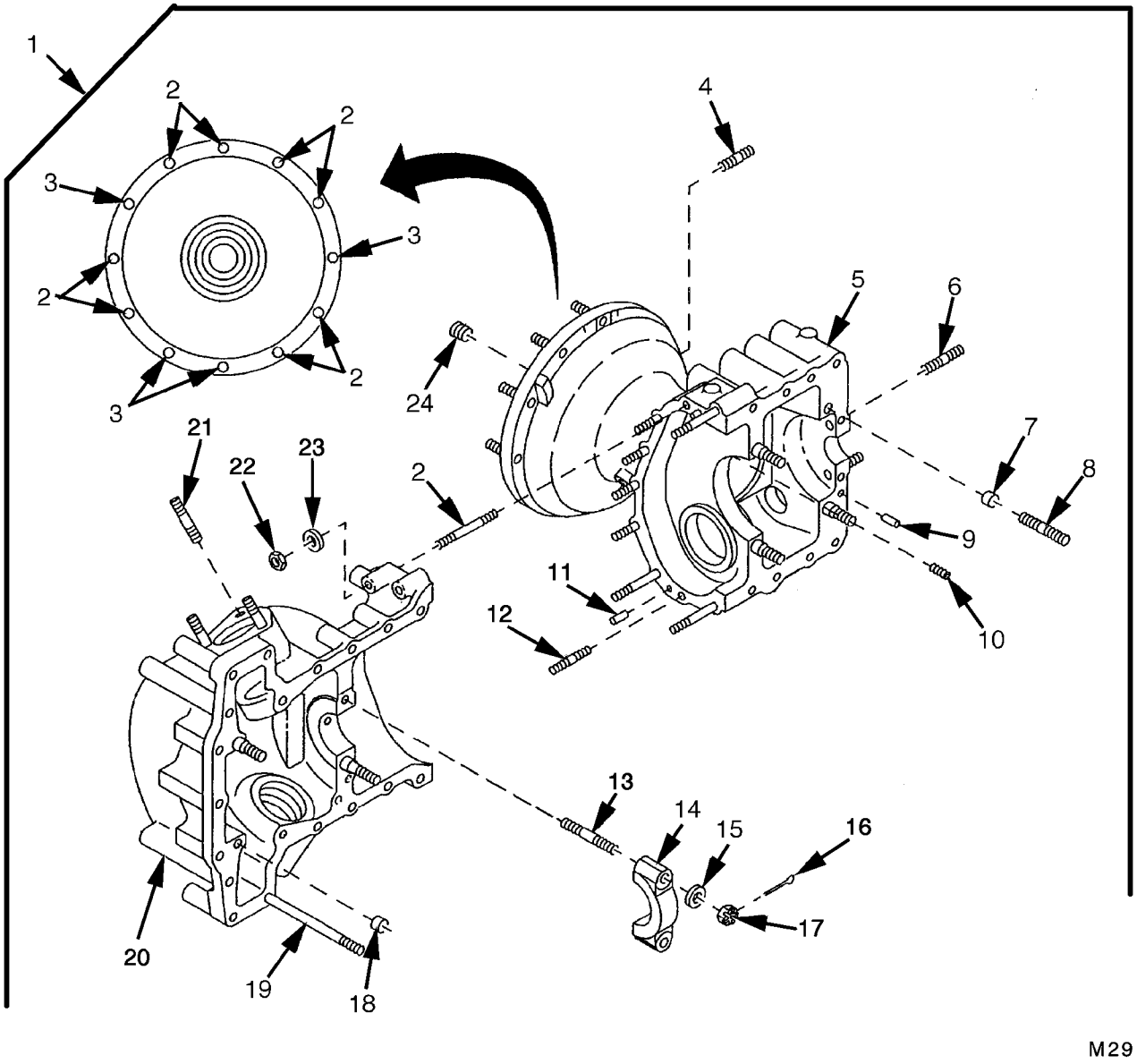

FIGURE 28. ACCESSORY DRIVE HOUSING

(1) ITEM NO.	(2) SMR CODE	(3) NSN	(4) CAGEC	(5) PART NUMBER	(6) DESCRIPTION AND USABLE ON CODES(UOC)	(7) QTY
					GROUP 0109: ACCESSORY DRIVING MECHANISMS	
					FIG.28 ACCESSORY DRIVE HOUSING	
1	PBHHH	2815-01-005-2993	19207	11642121-1	HOUSING ASSEMBLY	1
2	PAHZZ	5307-00-272-6331	19207	8365809	.STUD,PLAIN .003 OVERSIZE	13
2	PAHZZ	5307-00-272-6332	19207	8365810	.STUD,PLAIN .007 OVERSIZE	13
3	PAHZZ	5307-00-741-0395	28839	401895J	.STUD,PLAIN .003 OVERSIZE	4
3	PAHZZ	5307-00-734-8596	19207	7348596	.STUD,PLAIN .007 OVERSIZE	4
4	PAHZZ	5307-00-706-5766	19207	7065766	.STUD,PLAIN .003 OVERSIZE	1
4	PAHZZ	5307-00-706-5767	19207	7065767	.STUD,PLAIN .007 OVERSIZE	1
5	XAHZZ		19207	10935540	.HOUSING	1
6	PAHZZ	5307-00-734-8803	19207	7348803	.STUD,PLAIN .003 OVERSIZE	6
6	PAHZZ	5307-00-734-8804	19207	7348804	.STUD,PLAIN .007 OVERSIZE	6
7	XAHZZ		19207	8682469	.TUBE,METALLIC	8
8	PAHZZ	5307-00-638-7608	03104	401975S	.STUD,PLAIN .007 OVERSIZE	2
8	PAHZZ	5307-00-734-8668	19207	7348668	.STUD,PLAIN .003 OVERSIZE	2
9	PAHZZ	5315-00-058-9929	02978	501031	.PIN,STRAIGHT,HEADLE	2
10	PAHZZ	5325-00-291-3495	96906	MS124697	.INSERT,SCREW THREAD	3
11	PAHZZ	5315-00-241-2916	88044	AN122718	.PIN,STRAIGHT,HEADLE	2
12	PAHZZ	5307-00-207-8620	19207	7971982	.STUD,PLAIN .003 OVERSIZE	4
12	PAHZZ	5307-00-207-8619	19207	7971983	.STUD,PLAIN .007 OVERSIZE	4
13	PAHZZ	5307-00-678-6884	19207	7992689	.STUD,PLAIN .003 OVERSIZE	2
13	PAHZZ	5307-00-678-6885	19207	7992690	.STUD,PLAIN .007 OVERSIZE	2
14	XAHZZ		19207	7320440	.CAP	1
15	PAHZZ	5310-00-333-7348	19207	8679576	.WASHER,FLAT	2
16	PAHZZ	5315-00-839-5820	96906	MS24665-134	.PIN,COTTER	2
17	PAHZZ	5310-00-842-1488	96906	MS35692-21	.NUT,PLAIN,SLOTTED,H	2
18	XAHZZ		19207	8682513	.TUBE	4
19	PAHZZ	5307-00-678-6882	19207	7992665	.STUD,PLAIN .003 OVERSIZE	2
19	PAHZZ	5307-00-678-6883	19207	7992666	.STUD,PLAIN .007 OVERSIZE	2
20	XAHZZ		19207	11642123	.HOUSING,MECHANICAL	1
21	PAHZZ	5307-01-513-1290	19207	7744564	.STUD,PLAIN .007 OVERSIZE	6
21	PAHZZ	5307-00-264-2472	19207	7744813	.STUD,PLAIN .003 OVERSIZE	6
22	PAHZZ	5310-00-088-0553	80205	MS21044N5	.NUT,SELF-LOCKING,HE	9
23	PAHZZ	5310-00-167-0820	80205	NAS1149F0563P	.WASHER,FLAT	9
24	PAHZZ	4730-00-044-4689	28839	401752	.PLUG,PIPE	4

END OF FIGURE

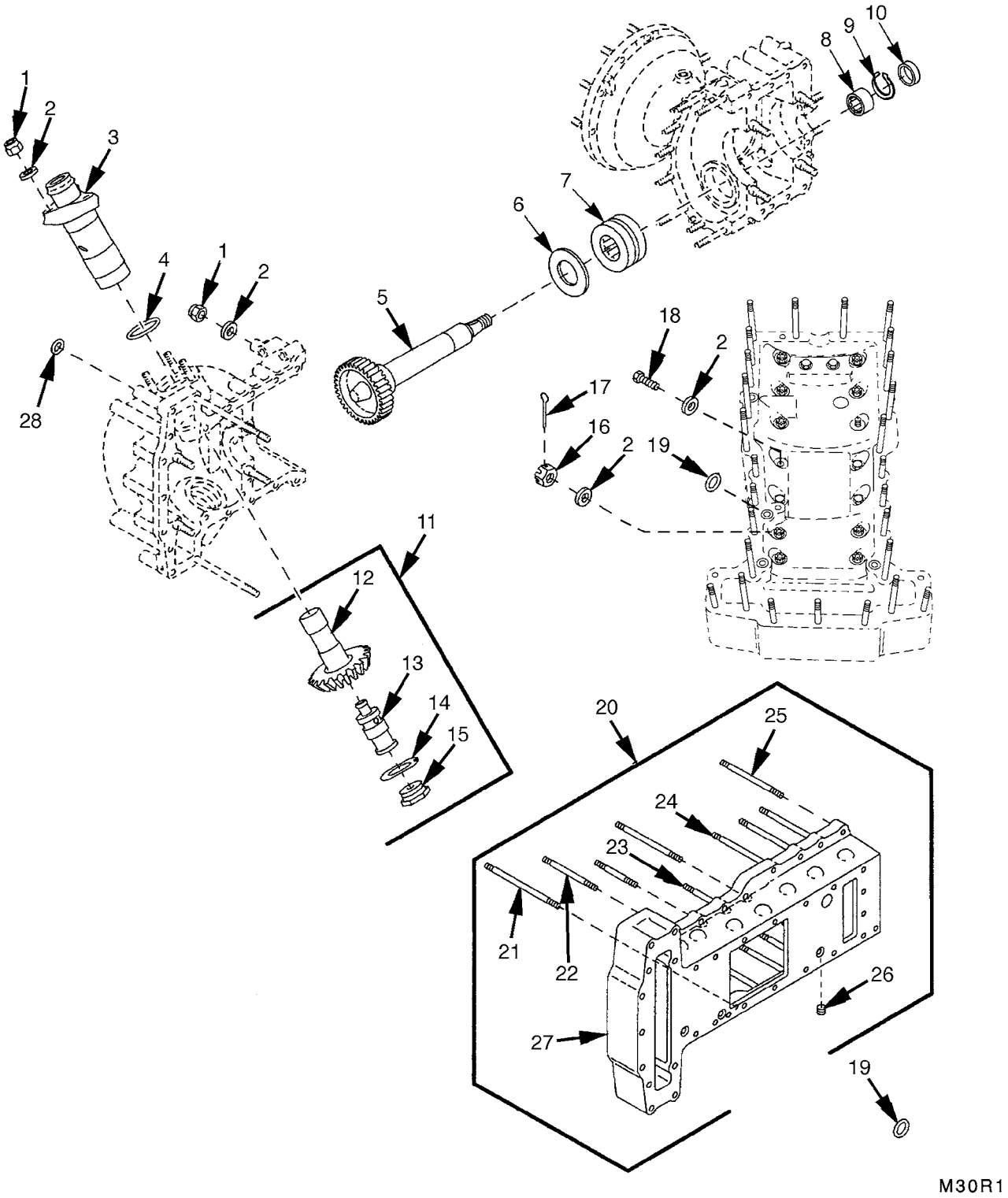

FIGURE 29. ACCESSORY DRIVE BASE AND GEARSHAFT ASSEMBLIES

(1) ITEM NO.	(2) SMR CODE	(3) NSN	(4) CAGEC	(5) PART NUMBER	(6) DESCRIPTION AND USABLE ON CODES(UOC)	(7) QTY
					GROUP 0109: ACCESSORY DRIVING MECHANISMS	
					FIG.29 ACCESSORY DRIVE BASE AND GEARSHAFT ASSEMBLIES	
1	PAHZZ	5310-00-959-1488	81349	M45913/2-6FG5C	NUT,SELF-LOCKING,HE	35
2	PAHZZ	5310-00-333-7348	19207	8679576	WASHER,FLAT	51
3	PBHZZ	2815-01-005-1463	19207	10865361	SUPPORT,ACCESSORY C	2
4	PAHZZ	5331-00-576-9732	81343	MS28775-226	O-RING PART OF KIT P/N 5704488	2
5	PBHZZ	3040-00-410-1135	19207	11642122	GEARSHAFT,SPUR	1
6	PBHZZ	5310-00-402-8379	19207	8761420	WASHER,RECESSED	1
7	PAHZZ	3110-01-315-9564	21450	700079	BEARING,BALL,ANNULA	1
8	PAHZZ		21450	709460	BEARING,ROLLER,NEED	1
9	PAHZZ	5325-00-804-3891	77445	501226	RING,RETAINING	1
10	PAHZZ	5330-00-678-4734	19207	8764982	SEAL,PLAIN ENCASED PART OF KIT P/N 5704488	1
11	PAHHH	3040-00-767-3200	19207	10865393	GEARSHAFT,BEVEL	2
12	XAHZZ		19207	10865383	.GEARSHAFT	1
13	XAHZZ		19207	8682539	.PLUG	1
14	PFHZZ	5310-00-239-5848	19207	10865381	.WASHER,KEY	1
15	XAHZZ		19207	10865382	.PLUG	1
16	PAHZZ		21450	122961	NUT,PLAIN,SLOTTED,H	10
17	PAHZZ	5315-00-839-5820	96906	MS24665-134	PIN,COTTER	10
18	PAHZZ	5305-00-269-3237	80204	B1821BH038F113N	SCREW,CAP,HEXAGON H	6
19	PAHZZ	5331-00-585-6663	96906	MS28775-110	O-RING PART OF KIT P/N 5704488	7
20	PBHHH	2815-00-177-9162	19207	8761206	BASE,ACCESSORY DRIV	1
21	PAHZZ	5307-00-678-6887	19207	8761199	.STUD,PLAIN .003 OVERSIZE	1
21	PAHZZ	5307-00-678-6888	19207	8761200	.STUD,PLAIN .007 OVERSIZE	1
22	PAHZZ	5307-00-678-6880	19207	7992649	.STUD,PLAIN .003 OVERSIZE	2
22	PAHZZ	5307-00-678-6881	19207	7992650	.STUD,PLAIN .007 OVERSIZE	2
23	PAHZZ	5307-00-678-6876	19207	7084444	.STUD,PLAIN .003 OVERSIZE	4
23	PAHZZ	5307-00-678-6877	19207	7084445	.STUD,PLAIN .007 OVERSIZE	4
24	PAHZZ	5307-00-678-6891	19207	8761442	.STUD,PLAIN .003 OVERSIZE	2
24	PAHZZ	5307-00-678-6890	19207	8761443	.STUD,PLAIN .007 OVERSIZE	2
25	PAHZZ	5307-01-513-4344	19207	7410162	.STUD,PLAIN .007 OVERSIZE	9
25	PAHZZ	5307-00-741-0163	19207	7410163	.STUD,PLAIN .003 OVERSIZE	9
26	PAHZZ	4730-00-044-4689	28839	401752	.PLUG,PIPE	4
27	XAHZZ		19207	8761188	BASE,ACCESSORY DRIV	1
28	PAHZZ	5330-00-814-6675	25184	1103-8	PACKING WITH RETAIN PART OF KIT P/N 5704488	2

END OF FIGURE

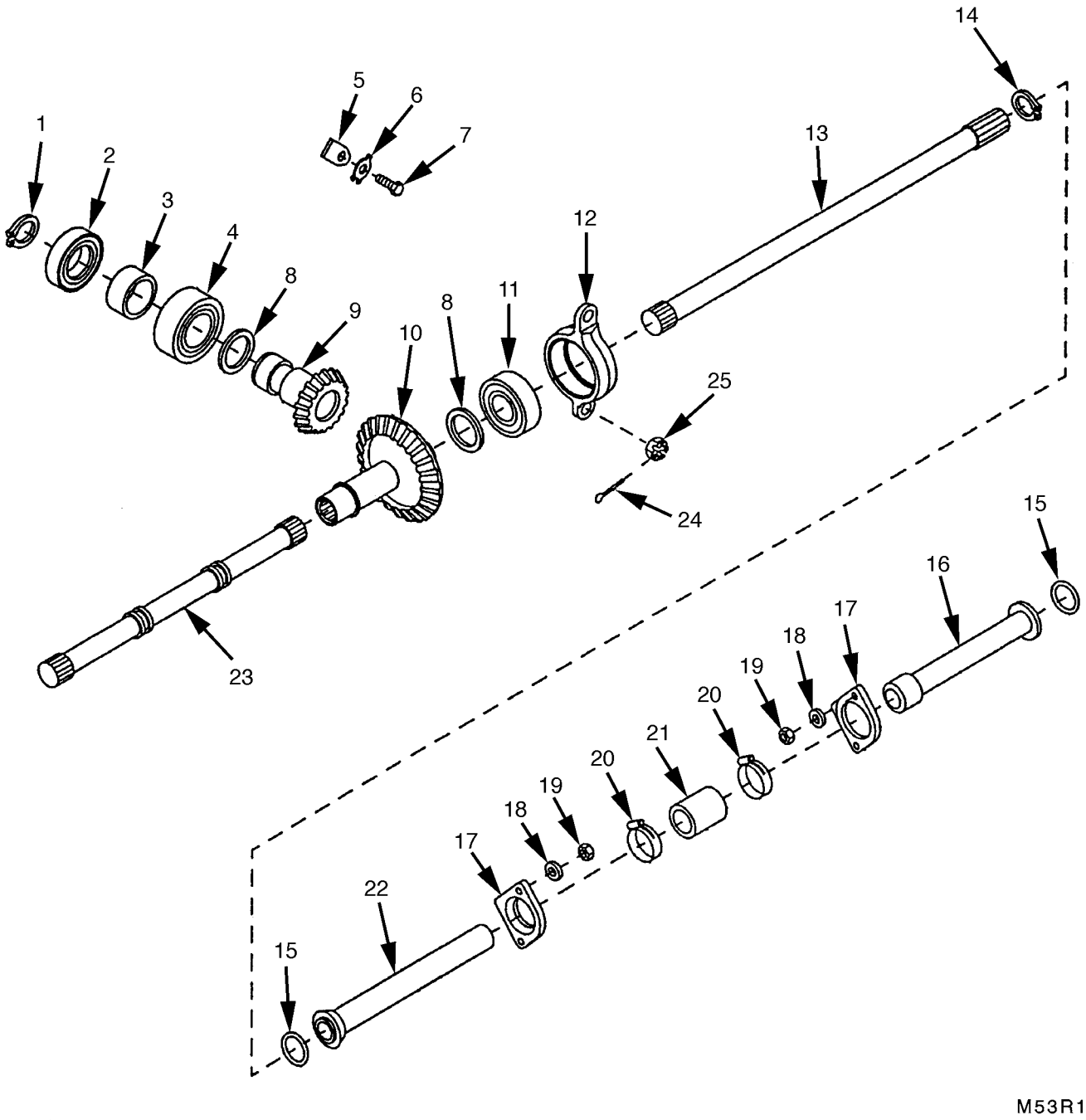

FIGURE 30. REAR FAN DRIVE

(1) ITEM NO.	(2) SMR CODE	(3) NSN	(4) CAGEC	(5) PART NUMBER	(6) DESCRIPTION AND USABLE ON CODES(UOC)	(7) QTY
					GROUP 0109: FAN ASSEMBLY	
					FIG.30 REAR FAN DRIVE	
1	PAHZZ	5325-00-281-2929	79136	5100-156MDORZD	RING,RETAINING	1
2	PAHZZ		21450	701023	BEARING,BALL,ANNULA	1
3	PAHZZ	5365-00-407-7011	19207	8682674	SPACER,SLEEVE	1
4	PAHZZ		21450	714056	BEARING,BALL,ANNULA	1
5	PAHZZ	3110-00-481-2825	19207	8761390	PLATE,RETAINING,BEA	1
6	PAHZZ	5310-01-511-1664	19207	7767350	WASHER,KEY	1
7	PAHZZ	5306-00-050-1238	80204	B1821BH031F075N	BOLT,MACHINE	1
8	PAHZZ	5365-00-678-3271	19207	8682455	SHIM	2
9	KFHZZ		19207	8682684	GEARSHAFT,BEVEL PART OF KIT P/N 5702622	1
10	KFHZZ		19207	7320478	GEARSHAFT,BEVEL PART OF KIT P/N 5702622	1
11	PAHZZ	3110-00-554-5302	21335	208K	BEARING,BALL,ANNULA	1
12	PBHZZ	3130-00-498-9359	19207	8725227	HOUSING,BEARING UNI	1
13	PAHZZ	3040-00-678-3265	19207	8761020	SHAFT,STRAIGHT	1
14	PAHZZ	5325-00-828-7570	96906	MS16626-1112	RING,RETAINING	1
15	PAHZZ	5331-01-160-4343	81349	M83461/1-325	O-RING PART OF KIT P/N 5704488	2
16	PFHZZ	4710-00-408-4684	19207	7320480	TUBE ASSEMBLY,METAL	1
17	PAHZZ	3040-00-411-5749	19207	7320463	PLATE,RETAINING,SHA	2
18	PAHZZ	5310-00-167-0820	80205	NAS1149F0563P	WASHER,FLAT	4
19	PAHZZ	5310-00-262-6375	96906	MS20365-524A	NUT,SELF-LOCKING,HE	4
20	PAHZZ	4730-00-908-3193	83299	0612596-00	CLAMP,HOSE	2
21	PAHZZ	4720-00-896-6166	19207	10898794	HOSE,AIR DUCT	1
22	PBHZZ	4710-00-350-9399	19207	7320469	TUBE ASSEMBLY,METAL	1
23	PAHZZ	3040-00-678-3255	19207	8761287	SHAFT,SHOULDERED	1
24	PAHZZ	5315-00-839-5820	96906	MS24665-134	PIN,COTTER	2
25	PAHZZ		21450	122961	NUT,PLAIN,SLOTTED,H	2

END OF FIGURE

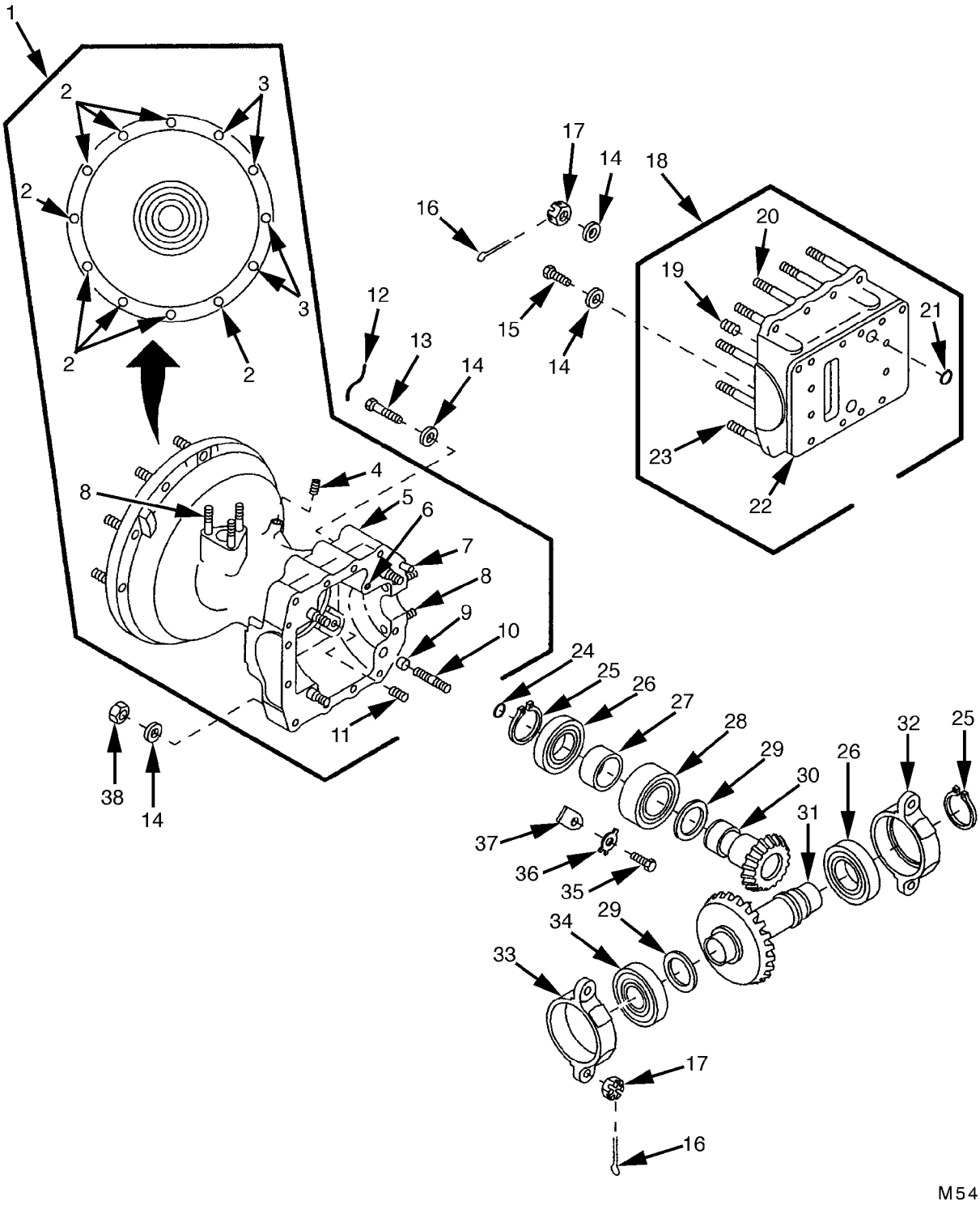

FIGURE 31. FRONT FAN DRIVE

(1) ITEM NO.	(2) SMR CODE	(3) NSN	(4) CAGEC	(5) PART NUMBER	(6) DESCRIPTION AND USABLE ON CODES(UOC)	(7) QTY
					GROUP 0109: FAN ASSEMBLY	
					FIG.31 FRONT FAN DRIVE	
1	PBHHH	3040-01-013-1783	19207	10935541/1	HOUSING,MECHANICAL	1
2	PAHZZ	5307-00-741-0395	28839	401895J	.STUD,PLAIN .003 OVERSIZE	8
2	PAHZZ	5307-00-734-8596	19207	7348596	.STUD,PLAIN .007 OVERSIZE	8
3	PAHZZ	5307-00-272-6331	19207	8365809	.STUD,PLAIN .003 OVERSIZE	4
3	PAHZZ	5307-00-272-6332	19207	8365810	.STUD,PLAIN .007 OVERSIZE	4
4	PAHZZ	4730-00-044-4689	28839	401752	.PLUG,PIPE	1
5	XAHZZ		19207	10935542	.HOUSING,COOLING FAN	1
6	PBHZZ	5365-00-733-8667	02978	400507	.SPACER,SLEEVE	1
7	PAHZZ	5315-00-058-9929	02978	501031	.PIN,STRAIGHT,HEADLE	2
8	PAHZZ	5307-00-734-8668	19207	7348668	.STUD,PLAIN .003 OVERSIZE	5
8	PAHZZ	5307-00-734-8669	19207	7348669	.STUD,PLAIN .007 OVERSIZE	5
9	PAHZZ	4710-01-248-9634	19207	8682469	.TUBE,METALLIC	4
10	PAHZZ	5307-00-678-3320	19207	7992673	.STUD,PLAIN .003 OVERSIZE	4
10	PAHZZ	5307-00-678-3321	19207	7992674	.STUD,PLAIN .007 OVERSIZE	4
11	PAHZZ	5325-00-291-3495	96906	MS124697	.INSERT,SCREW THREAD	1
12	MHHZZ		96906	MS20995NC40-12	WIRE,NONELECTRICAL (MAKE FROM WIRE, NONELECTRICAL P/N NASM20995NC40)	V
13	PAHZZ	5305-01-510-6988	96906	MS51098-63	SCREW,CAP,HEXAGON H	2
14	PAHZZ	5310-00-333-7348	19207	8679576	WASHER,FLAT	21
15	PAHZZ	5305-00-269-3238	80204	B1821BH038F125N	SCREW,CAP,HEXAGON H	2
16	PAHZZ	5315-00-839-5820	96906	MS24665-134	PIN,COTTER	14
17	PAHZZ		21450	122961	NUT,PLAIN,SLOTTED,H	14
18	PBHHH	3040-01-010-3186	19207	8761155-1	HOUSING,MECHANICAL	1
19	PAHZZ	5325-00-678-3311	96906	MS21209F6-20	.INSERT,SCREW THREAD	2
20	PAHZZ	5307-00-774-4605	19207	7744605	.STUD,PLAIN .007 OVERSIZE	8
20	PAHZZ	5307-00-774-4795	19207	7744795	.STUD,PLAIN .003 OVERSIZE	8
21	PAHZZ	5331-00-599-2934	81343	MS28775-112	.O-RING PART OF KIT P/N 5704488	1
22	XAHZZ		19207	8761051	.BASE,FANDRIVE	1
23	PAHZZ	5307-00-678-3329	19207	8761203	.STUD,PLAIN .003 OVERSIZE	2
23	PAHZZ	5307-00-678-3328	19207	8761204	.STUD,PLAIN .007 OVERSIZE	2
24	PAHZZ	5331-00-582-2133	81343	MS28775-011	O-RING PART OF KIT P/N 5704488	1
25	PAHZZ	5325-00-281-2929	79136	5100-156MDORZD	RING,RETAINING	2
26	PAHZZ		21450	701023	BEARING,BALL,ANNULA	2
27	PAHZZ	5365-00-407-7011	19207	8682674	SPACER,SLEEVE	1
28	PAHZZ		21450	714056	BEARING,BALL,ANNULA	1
29	PAHZZ	5365-00-678-3271	19207	8682455	SHIM	2
30	KFHZZ		19207	8682684	GEARSHAFT,BEVEL PART OF KIT P/N 5702621	1
31	KFHZZ		19207	8682553	GEARSHAFT,BEVEL PART OF KIT P/N 5702621	1
32	PAHZZ	3040-00-937-4846	19207	8725226	BRACKET,EYE,ROTATIN	1
33	PBHZZ	3130-00-498-9359	19207	8725227	HOUSING,BEARING UNI	1
34	PAHZZ	3110-00-554-5302	21335	208K	BEARING,BALL,ANNULA	1
35	PAHZZ	5306-00-050-1238	80204	B1821BH031F075N	BOLT,MACHINE	1
36	PAHZZ	5310-01-511-1664	19207	7767350	WASHER,KEY	1
37	PAHZZ	3110-00-481-2825	19207	8761390	PLATE,RETAINING,BEA	1
38	PAHZZ	5310-00-959-1488	81349	M45913/2-6FG5C	NUT,SELF-LOCKING,HE	10

END OF FIGURE

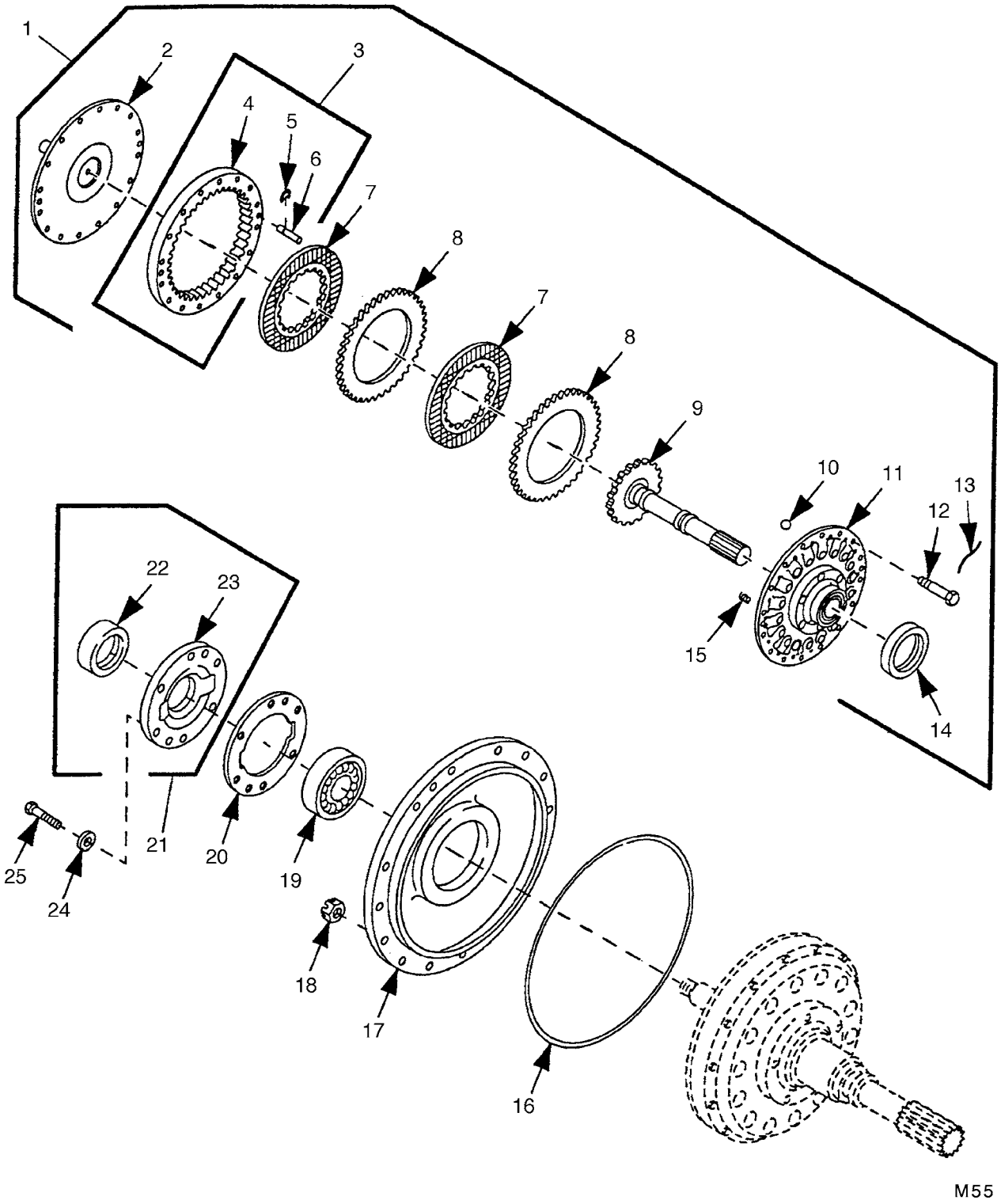

FIGURE 32. FAN DRIVE CLUTCH ASSEMBLY

(1) ITEM NO.	(2) SMR CODE	(3) NSN	(4) CAGEC	(5) PART NUMBER	(6) DESCRIPTION AND USABLE ON CODES(UOC)	(7) QTY
					GROUP 0109: FAN ASSEMBLY	
					FIG.32 FAN DRIVE CLUTCH ASSEMBLY	
1	PAFFF	2520-00-435-4564	19207	10951075	CLUTCH ASSEMBLY,FRI.	2
2	XAFZZ		19207	10951119	.FLANGE	1
3	XAFFF		19207	10951076	.HOUSING	1
4	PAFZZ	5365-01-114-7409	19207	10951077	..SPACER,RING.	1
5	PAFZZ	5325-00-663-1245	96906	MS16632-1031	..RING,RETAINING	2
6	PFFZZ	5315-01-511-3707	19207	10951078	..PIN,GROOVED,HEADLES	2
7	PAFZZ	2520-00-435-4572	19207	10951084	.DISK,CLUTCH	2
8	PAFZZ	2520-01-160-8074	19207	10951083	.DISK,CLUTCH	2
9	XAFZZ		19207	10951081	.SHAFT ASSEMBLY	1
10	PAFZZ	3110-00-462-0392	19207	10951369	.BALL,BEARING	6
11	PFFZZ	2930-00-435-4568	19207	10951079	.HUB ASSEMBLY,FAN DR.	1
12	PAFZZ	5306-00-182-2029	88044	AN5H12A	.BOLT,MACHINE	16
13	MFFZZ		96906	MS20995NC40-36	.WIRE,NONELECTRICAL (MAKE FROM WIRE,NONELECTRICAL P/N NASM20995NC40)	V
14	PAFZZ		21450	701024	.BEARING	1
15	PAFZZ	5360-00-678-3256	19207	8761260	.SPRING,HELICAL,COMP	3
16	PAFZZ	5331-01-117-8833	96906	MS28775-272	O-RING PART OF KIT P/N 5704488	2
17	PAFZZ	5340-00-248-4631	19207	8682765	COVER,ACCESS.	2
18	PAFZZ	5310-00-807-1469	80205	MS21042-5	NUT,SELF-LOCKING,EX	24
19	PAFZZ	3110-00-555-5207	01212	307	BEARING,BALL,ANNULA	2
20	PAOZZ	5330-01-037-0800	19207	12254235	GASKET PART OF KIT P/N 5704488	2
21	PAOOO	5340-00-678-3267	19207	8761062	PLATE,RETAINING,SEA.	2
22	PAOZZ	5330-00-902-3189	19207	10935537	.SEAL,PLAIN ENCASED PART OF KIT P/N 5704488	1
23	XAOZZ		19207	8761063	.HOUSING	1
24	PAOZZ	5310-00-167-0820	80205	NAS1149F0563P	WASHER,FLAT	12
25	PAOZZ	5306-00-225-9089	96906	MS90726-34	BOLT,MACHINE	12

END OF FIGURE

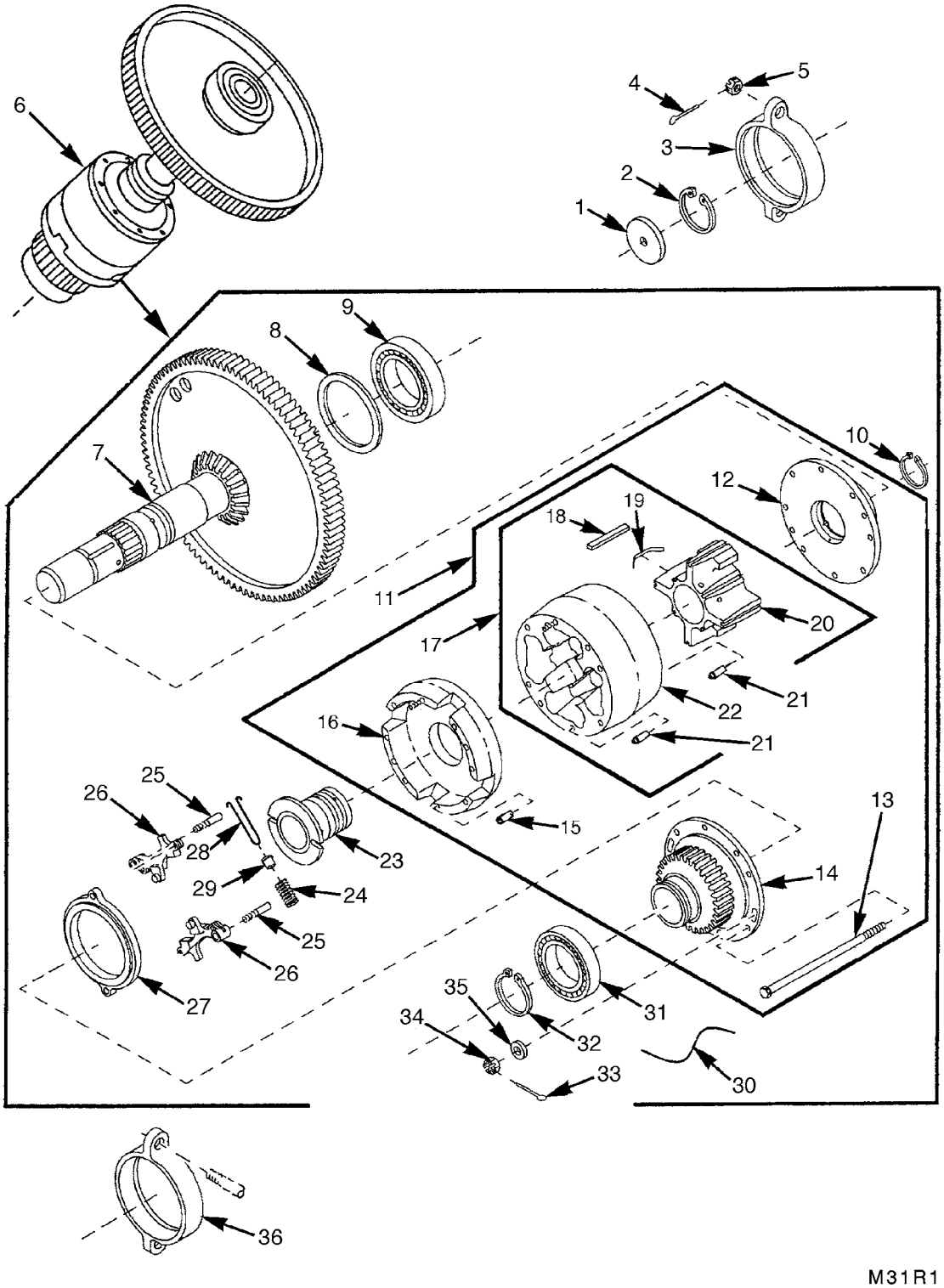

FIGURE 33. AUTOMATIC INJECTION ADVANCE ASSEMBLY

(1) ITEM NO.	(2) SMR CODE	(3) NSN	(4) CAGEC	(5) PART NUMBER	(6) DESCRIPTION AND USABLE ON CODES(UOC)	(7) QTY
					GROUP 0109: ACCESSORY DRIVING MECHANISMS	
					FIG.33 AUTOMATIC INJECTION ADVANCE ASSEMBLY	
1	PAHZZ	5310-00-406-7319	19207	8761244	PLUG,ORIFICE	1
2	PAHZZ	5325-00-804-2786	96906	MS16625-1125	RING,RETAINING	1
3	PAHZZ	3040-00-394-9695	19207	11684059	BRACKET,EYE,ROTATIN	1
4	PAHZZ	5315-00-839-5820	96906	MS24665-134	PIN,COTTER	4
5	PAHZZ		21450	122961	NUT,PLAIN,SLOTTED,H	1
6	PBHHH	2815-01-053-3789	19207	12254217	CONTROL,AUTOMATIC,F	1
7	PAHZZ	3040-00-678-4246	19207	8725248	.GEARSHAFT,MULTIPLE	1
8	PFHZZ	5365-00-678-4730	19207	8761041	.SHIM	1
9	PAHZZ	3110-00-529-9480	81348	FFB171/03J10A2E	.BEARING,BALL,ANNULA	1
10	PAHZZ	5325-00-678-4257	19207	8761413	.RING,RETAINING	4
11	PFHHH	3040-01-054-9730	19207	12254215	.HOUSING,MECHANICAL	1
12	XAHZZ		19207	10889712	..COVER	1
13	PAHZZ	5306-00-837-9469	19207	10898746	..BOLT,MACHINE	6
14	XAHZZ		19207	12254218	..GEARSHAFT,SPUR	1
15	XAHZZ		19207	589919	..PIN,STRAIGHT,HEADLE	2
16	XAHZZ		19207	11684263	..HOUSING	1
17	XAHHH		19207	8682730	..HOUSING,ASSEMBLY	1
18	KFHZZ		19207	10882649	...SEAL PART OF KIT P/N 5702641	8
19	KFHZZ		19207	10882650	...SPRING PART OF KIT P/N 5702641	8
20	XAHZZ		19207	7320400	...VANE	1
21	PAHZZ		19207	589919	...PIN,STRAIGHT,HEADLE	4
22	XAHZZ		19207	7320403	...HOUSING	1
23	PFHZZ	4820-00-678-4729	19207	8682731	.VALVE,REGULATING,FL	2
24	PAHZZ	5360-00-410-1983	19207	11684064	.SPRING,HELICAL,COMP	2
25	XAHZZ		19207	8682665	.PIN	2
26	XAHZZ		19207	11684267	.FLYWEIGHT ASSEMBLY	1
27	XAHZZ		19207	8682732	.RING,ADJUSTING	1
28	PAHZZ	5340-00-410-1216	19207	11684063	.CLIP,RETAINING	4
29	PAHZZ	5340-00-533-3888	19207	11684065	.SEAT,HELICAL COMPRE	4
30	MHHZZ		96906	MS20995NC32-12	.WIRE,NONELECTRICAL (MAKE FROM WIRE,NONELECTRICAL P/N NASM20995NC32)	V
31	PAHZZ	3110-01-094-9268	21450	701077	.BEARING,BALL,ANNULA	1
32	PAHZZ	5325-00-682-1619	19207	586365	.RING,RETAINING	1
33	PAHZZ	5315-00-839-2325	80205	MS24665-132	.PIN,COTTER	2
34	PAHZZ	5310-00-176-8108	80205	AN320-4	.NUT,PLAIN,SLOTTED,H	2
35	PAHZZ	5310-00-141-1795	88044	AN960-416	.WASHER,FLAT	2
36	PBHZZ	3130-00-179-6656	19207	8725243	HOUSING,BEARING UNI	1

END OF FIGURE

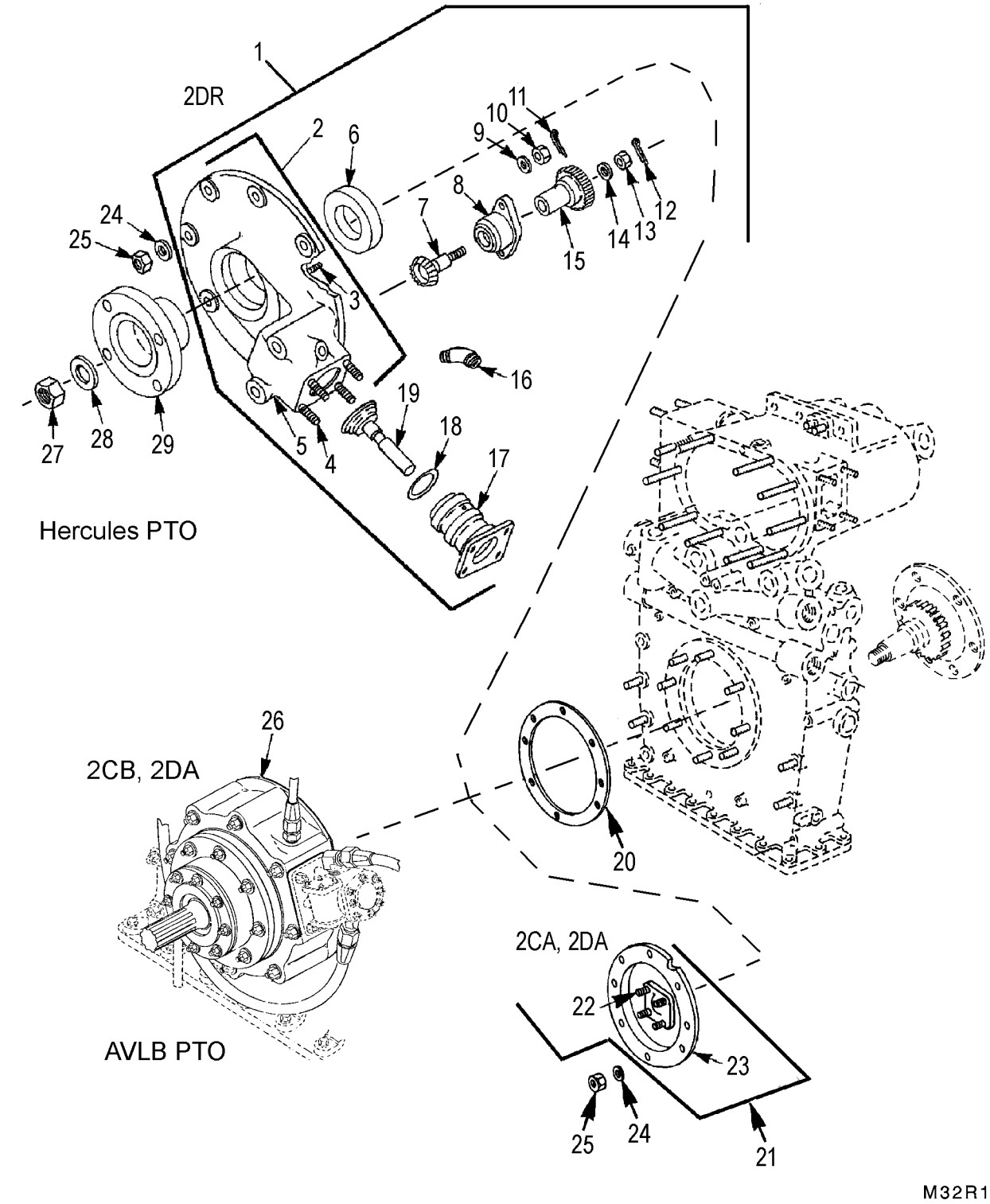

FIGURE 34. PTO/FUEL PUMP DRIVE HOUSING

(1) ITEM NO.	(2) SMR CODE	(3) NSN	(4) CAGEC	(5) PART NUMBER	(6) DESCRIPTION AND USABLE ON CODES(UOC)	(7) QTY
					GROUP 0109: ACCESSORY DRIVING MECHANISMS	
					FIG.34 PTO/FUEL PUMP DRIVE HOUSING	
1	PAFFF	2990-01-136-0965	19207	12275789	POWER TAKEOFF,ENGIN. . . . . UOC:EFR	1
2	PAFFF	3040-01-184-4813	19207	12275790	.HOUSING,MECHANICAL. . . . . UOC:EFR	1
3	PAFZZ	5307-01-031-0408	19207	8666532	..STUD,PLAIN . . . . . UOC:EFR	2
3	PAFZZ	5307-01-031-0407	19207	8666533	..STUD,PLAIN . . . . . UOC:EFR	2
4	PAFZZ	5307-00-734-8776	19207	7348776	..STUD,PLAIN . . . . . UOC:EFR	4
4	PAFZZ	5307-00-734-8777	19207	7348777	..STUD,PLAIN . . . . . UOC:EFR	4
5	XAFZZ		19207	12275788	..HOUSING. . . . . UOC:EFR	1
6	PAFZZ	5330-01-196-7948	19207	11669695	.SEAL,PLAIN ENCASED PART OF KIT P/N 5704488 . . . . . UOC:EFR	1
7	KFFZZ		19207	10898995	.GEARSHAFT,BEVEL PART OF KIT P/N 5704471 . . . . . UOC:EFR	1
8	PAFZZ	5340-01-011-9020	19207	10898993	.BRACKET,MOUNTING . . . . . UOC:EFR	1
9	PAFZZ	5310-00-809-4058	96906	MS27183-10	.WASHER,FLAT. . . . . UOC:EFR	2
10	PAFZZ	5310-00-840-6151	96906	MS35692-5	.NUT,PLAIN,SLOTTED,H . . . . . UOC:EFR	2
11	PAFZZ	5315-00-239-8019	80205	MS24665-86	.PIN,COTTER. . . . . UOC:EFR	2
12	PAFZZ	5315-00-839-5820	80205	MS24665-134	.PIN,COTTER. . . . . UOC:EFR	1
13	PAFZZ	5310-00-849-6883	96906	MS35692-13	.NUT,PLAIN,SLOTTED,H . . . . . UOC:EFR	1
14	PAFZZ	5310-00-774-4766	19207	7744766	.WASHER,FLAT. . . . . UOC:EFR	1
15	PBFZZ	3020-00-573-4568	19207	10898994	.GEAR,SPUR . . . . . UOC:EFR	1
16	PAFZZ	4730-00-895-9726	96906	MS20823-5J	.ELBOW,PIPE TO TUBE . . . . . UOC:EFR	1
17	PAFZZ	5340-01-011-9021	19207	10899002	.BRACKET,MOUNTING . . . . . UOC:EFR	1
18	PAFZZ		96906	MS9241-135	.O-RING PART OF KIT P/N 5704488 . . . . . UOC:EFR	1
19	KFFZZ		19207	10899003	.GEARSHAFT,BEVEL PART OF KIT P/N 5704471 . . . . . UOC:EFR	1
20	PAFZZ	5330-00-678-3171	19207	8725277	GASKET PART OF KIT P/N 5704488 PART OF KIT P/N 5705063	1
21	PBFFH	4730-00-617-8626	19207	10882611	ADAPTER AND FLANGE. UOC:2CA,2DA	1
22	PAFZZ	5307-00-734-8668	19207	7348668	.STUD,PLAIN .003 OVERSIZE UOC:2CA,2DA	4
22	PAFZZ	5307-00-734-8669	19207	7348669	.STUD,PLAIN .007 OVERSIZE UOC:2CA,2DA	4
23	XAFZZ		19207	10882609	.ADAPTER,FUEL PUMP. UOC:2CA,2DA	1
24	PAFZZ	5310-00-333-7348	19207	8679576	WASHER,FLAT	8
25	PAFZZ	5310-00-959-1488	81349	M45913/2-6FG5C	NUT,SELF-LOCKING,HE	8
26	PAFZZ		19207	10935607	POWER TAKEOFF UOC:2DA	1

(1) ITEM NO.	(2) SMR CODE	(3) NSN	(4) CAGEC	(5) PART NUMBER	(6) DESCRIPTION AND USABLE ON CODES(UOC)	(7) QTY
27	PAFZZ	5310-00-225-6409	81349	M45913/1-14FG5C	NUT,SELF-LOCKING,HE PART OF KIT P/N 5705063 . . . . . UOC:EFR	1
28	KFFZZ		19207	12275763	WASHER,FLAT PART OF KIT P/N 5705063 . . . . . UOC:EFR	1
29	KFFZZ		19207	12275765	COUPLING,HALF,SH,PO PART OF KIT P/N 5705063 . . . . . UOC:EFR	1

END OF FIGURE

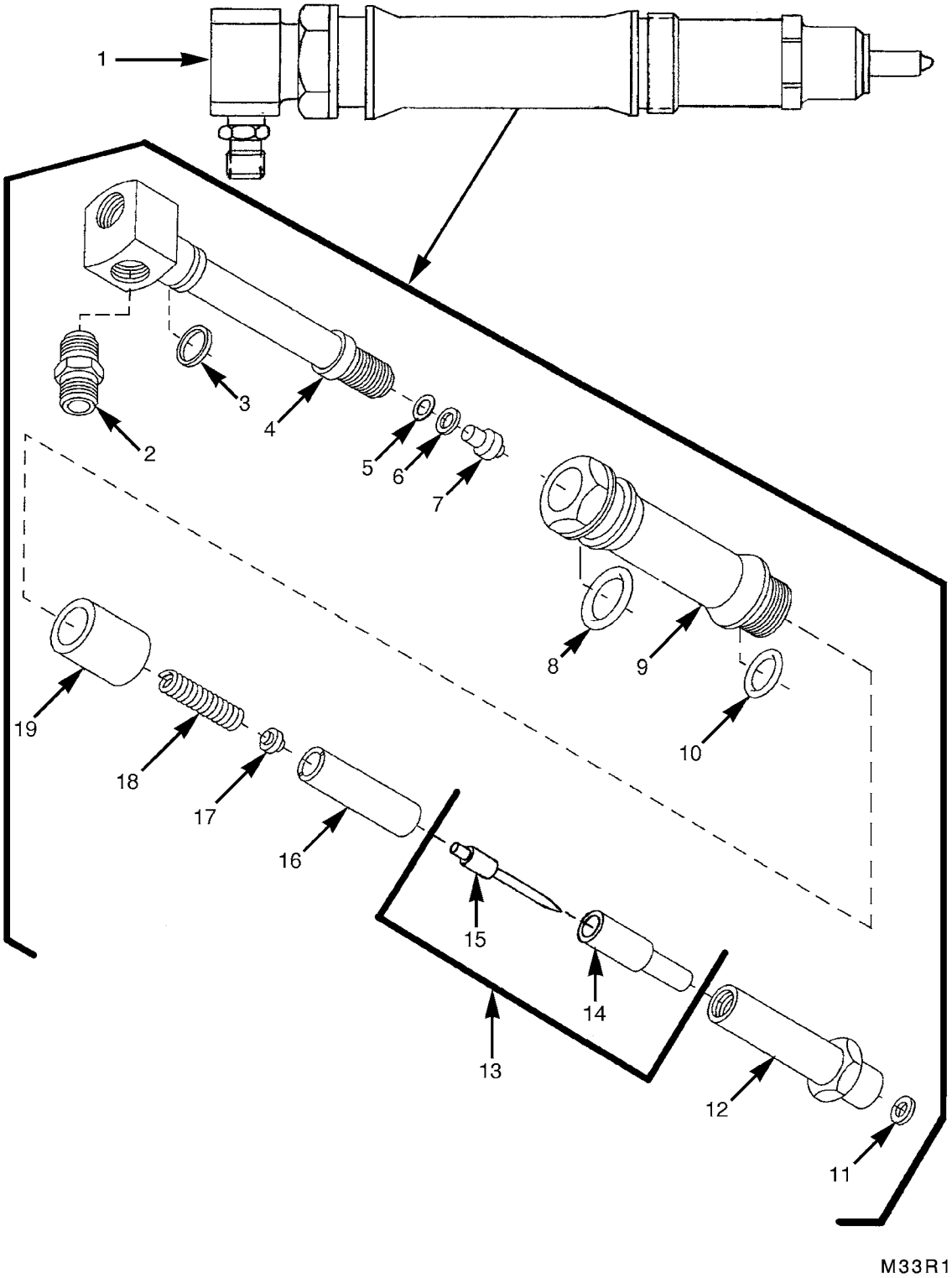

FIGURE 35. FUEL INJECTOR NOZZLE AND HOLDER ASSEMBLY

(1) ITEM NO.	(2) SMR CODE	(3) NSN	(4) CAGEC	(5) PART NUMBER	(6) DESCRIPTION AND USABLE ON CODES(UOC)	(7) QTY
					GROUP 03: FUEL SYSTEM	
					GROUP 0301: CARBURETOR,FUEL INJECTOR	
					FIG.35 FUEL INJECTOR NOZZLE AND HOLDER ASSEMBLY	
1	PAFFH	2910-01-509-7176	19207	10912452-4	NOZZLE,FUEL INJECTI	12
2	PAFZZ	2910-01-041-3464	01843	SD783154	.STUD-FUEL INLET	1
3	PAFZZ	5331-00-165-1975	81349	M83248/1-911	.O-RING PART OF KIT P/N 5704488	1
4	XAFZZ		01843	HH78371	.BODY,FUEL INJECTOR	1
5	PAFZZ	5365-00-089-8836	99066	SR7827	.SPACER,RING	1
6	PAFZZ	5365-00-878-9932	99066	SR7828-1	.SPACER,NOZZLE AND H .0015-.0025 THICK PART OF KIT P/N 5702674	1
6	KFFZZ		01843	SR7828-2	.SHIM .0062-.0078 THICK PART OF KIT P/N 5702674	1
6	KFFZZ		01843	SR7828-3	.SHIM .009-.011 THICK PART OF KIT P/N 5702674	1
6	KFFZZ		01843	SR7828-4	.SHIM .024-.026 THICK PART OF KIT P/N 5702674	1
6	KFFZZ		01843	SR7828-5	.SHIM .040-.044 THICK PART OF KIT P/N 5702674	1
7	PAFZZ	2910-00-878-9933	01843	GU7837	.SEAT,NOZZLE AND HOL	1
8	PCFZZ	5331-00-078-4866	19207	10935359	.O-RING PART OF KIT P/N 5704488	12
9	XAFZZ		01843	RN780807	.RETAINER	1
10	PAFZZ	5331-00-167-5114	81349	M83248/1-126	.O-RING	1
11	PAFZZ	5330-01-433-5274	19207	12354456	.GASKET PART OF KIT P/N 5704488 PART OF KIT P/N 5705288	1
12	XAFZZ		01843	NT7899	.NUT,FUEL INJECTOR	1
13	PAFFF	2910-00-064-6262	01843	ADB135S-126-7	.NOZZLE,FUEL INJECTI	1
14	XAFZZ		01843	VB77144-4	..BODY,FUEL INJECTOR	1
15	XAFZZ		01843	VA77162	..VALVE,FUEL INJECTOR	1
16	XAFZZ		01843	SR7829	.SPACER,FUEL INJECTO	1
17	XAFZZ		19207	10951061	.SEAT,FUEL INJECTOR	1
18	XAFZZ		01843	SP7830	.SPRING,FUEL INJECTO	1
19	PAFZZ	5340-01-482-5403	19207	12468946	.HOLDER,SPRING	1

END OF FIGURE

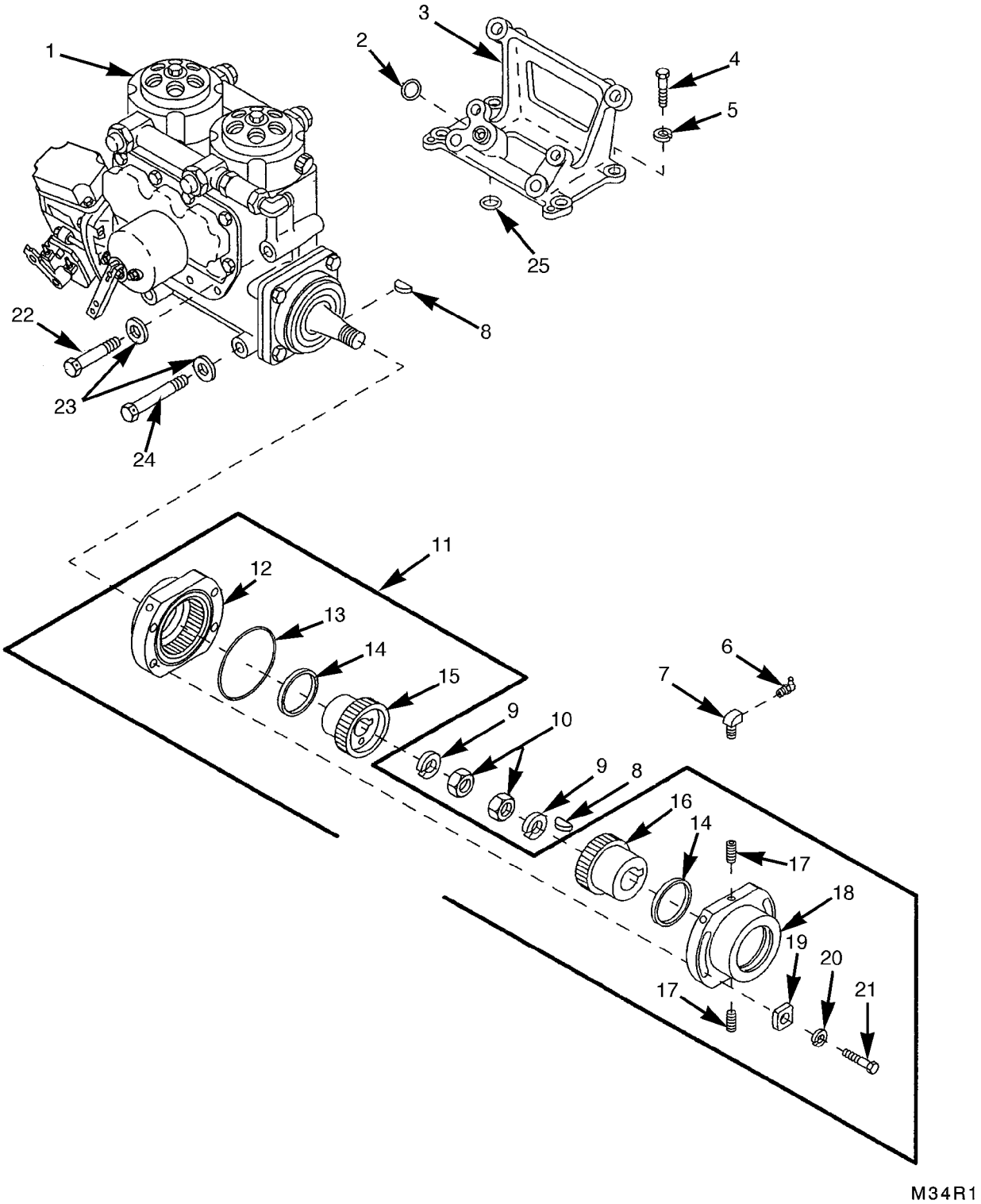

FIGURE 36. FUEL INJECTION PUMP, BASE, AND COUPLING ASSEMBLY

(1) ITEM NO.	(2) SMR CODE	(3) NSN	(4) CAGEC	(5) PART NUMBER	(6) DESCRIPTION AND USABLE ON CODES(UOC)	(7) QTY
					GROUP 0302: FUEL PUMPS	
					FIG.36 FUEL INJECTION PUMP, BASE, AND COUPLING ASSEMBLY	
1	PAFHD	2910-01-073-0124	19207	11684129-1	PUMP,FUEL,METERING (FOR COMPONENT PARTS SEE TM9-2910-212-34&P,GROUP 0302)	1
2	PAFZZ	5331-00-579-3156	81343	MS28775-116	O-RING PART OF KIT P/N 5704488	1
3	PAHZZ	3040-00-402-4422	19207	8761085	BRACKET,EYE,ROTATIN	1
4	PAHZZ	5305-00-725-0154	80204	B1821BH050F138N	SCREW,CAP,HEXAGON H	4
5	PAHZZ	5310-00-003-4094	96906	MS35338-48	WASHER,LOCK	4
6	PAFZZ	4730-00-172-0058	96906	MS15006-4	FITTING,LUBRICATION	1
7	PAFZZ	4730-01-005-2014	21450	444011	REDUCER,PIPE	1
8	PAFZZ	5315-00-282-0341	19207	8761412	KEY,WOODRUFF PART OF KIT P/N 5704366	2
9	PAFZZ	5310-00-584-7888	96906	MS35338-51	WASHER,LOCK	2
10	PAFZZ	5310-00-655-9590	19207	7340058	NUT,PLAIN,HEXAGON	2
11	PAFFF	3010-00-678-4725	65456	C3062	COUPLING,SHAFT,FLEX	1
12	XAFZZ		86988	C3062-2	.SLEEVE	1
13	PAFZZ	5331-00-579-7545	96906	MS28775-238	.O-RING PART OF KIT P/N 5704366	1
14	PAFZZ	5331-01-433-5288	75394	WA29908	.O-RING PART OF KIT P/N 5704366	2
15	XAFZZ		75394	CC14985	.HUB	1
16	XAFZZ		75394	CC14894	.HUB	1
17	XAFZZ		75394	CC40552MK12	.PLUG	2
18	XAFZZ		75394	CC14983	.SLEEVE	1
19	KFFZZ		75394	WA29909	.SPACER PART OF KIT P/N 5704366	4
20	PAFZZ	5310-00-637-9541	96906	MS35338-46	.WASHER,LOCK PART OF KIT P/N 5704366	4
21	KFFZZ		75394	WA29906	.BOLT PART OF KIT P/N 5704366	4
22	PAFZZ	5306-01-510-8451	19207	7323987	BOLT,MACHINE	2
23	PAFZZ	5310-00-149-9116	96906	MS20002C8	WASHER,RECESSED	4
24	PAFZZ	5306-00-678-4260	19207	7323988	BOLT,MACHINE	2
25	PAHZZ	5331-00-582-2855	96906	MS28775-113	O-RING PART OF KIT P/N 5704488	1

END OF FIGURE

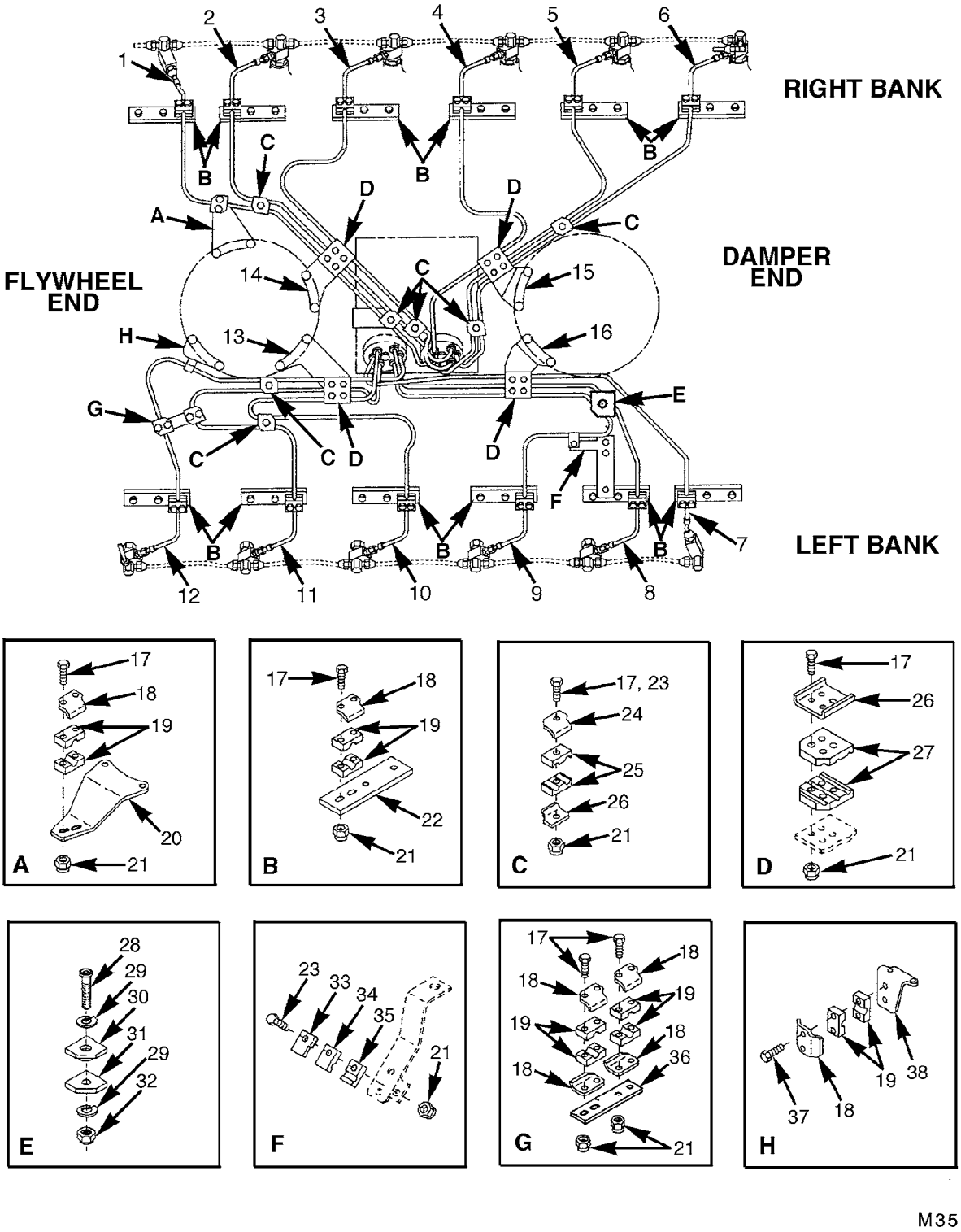

FIGURE 37. FUEL INJECTOR TUBES AND BRACKETS

(1) ITEM NO.	(2) SMR CODE	(3) NSN	(4) CAGEC	(5) PART NUMBER	(6) DESCRIPTION AND USABLE ON CODES(UOC)	(7) QTY
					GROUP 0302: FUEL PUMPS	
					FIG.37 FUEL INJECTOR TUBES AND BRACKETS	
1	PAFZZ	4710-01-012-4648	19207	11682756	TUBE ASSEMBLY,METAL	1
2	PAFZZ	4710-01-012-4647	19207	11682755	TUBE ASSEMBLY,METAL	1
3	PAFZZ	4710-01-012-4651	19207	11682754	TUBE ASSEMBLY,METAL	1
4	PAFZZ	4710-01-012-4650	19207	11682753	TUBE ASSEMBLY,METAL	1
5	PAFZZ	4710-01-012-4646	19207	11682752	TUBE ASSEMBLY,METAL	1
6	PAFZZ	4710-01-012-4645	19207	11682751	TUBE ASSEMBLY,METAL	1
7	PAFZZ	4710-01-012-4655	19207	11682757	TUBE ASSEMBLY,METAL	1
8	PAFZZ	4710-01-012-4652	19207	11682758	TUBE ASSEMBLY,METAL	1
9	PAFZZ	4710-01-012-4649	19207	11682759	TUBE ASSEMBLY,METAL	1
10	PAFZZ	4710-01-012-4653	19207	11682760	TUBE ASSEMBLY,METAL	1
11	PAFZZ	4710-01-014-8156	19207	11682761	TUBE ASSEMBLY,METAL	1
12	PAFZZ	4710-01-012-4654	19207	11682762	TUBE ASSEMBLY,METAL	1
13	PAFZZ	5340-01-010-6171	19207	11684143	BRACKET,DOUBLE ANGL	1
14	PAFZZ	5340-01-010-6172	19207	11684144	BRACKET,DOUBLE ANGL	1
15	PAFZZ	5340-01-010-6173	19207	11684146	BRACKET,DOUBLE ANGL	1
16	PAFZZ	5340-01-010-6170	19207	11684145	BRACKET,DOUBLE ANGL	1
17	PAOZZ	5306-00-051-4081	80204	B1821BH031F175N	BOLT,MACHINE	52
18	PAOZZ	5340-01-026-4024	19207	11684155	STRAP,RETAINING	18
19	PAOZZ	5342-01-017-4508	19207	11684158	FAIRLEAD HALF,TUBUL	32
20	PAFZZ	5340-01-010-6174	19207	11684147	BRACKET,DOUBLE ANGL	1
21	PAOZZ	5310-00-982-4912	96906	MS21045-5	NUT,SELF-LOCKING,HE	54
22	PAFZZ	5365-01-021-3088	19207	11684160	SPACER,PLATE	12
23	PAOZZ	5305-00-225-9093	96906	MS90726-38	SCREW,CAP,HEXAGON H	2
24	PAOZZ	5340-01-017-6947	19207	11684156	STRAP,RETAINING	14
25	PAOZZ	5342-01-015-9789	19207	11684157	FAIRLEAD HALF,TUBUL	14
26	PAOZZ	5340-01-026-2008	19207	11684154	STRAP,RETAINING	4
27	PAOZZ	5342-01-015-9788	19207	11684159	FAIRLEAD HALF,TUBUL	8
28	PAOZZ	5305-01-502-7258	19207	12354445	SCREW,CAP,SOCKET HE	1
29	PAOZZ	5310-01-303-5647	80205	MS15795-858	WASHER,FLAT	2
30	PAOZZ	5340-01-433-1141	19207	12354443	CLAMP,SYNCHRO	1
31	PAOZZ	5340-01-433-0518	19207	12354444	CLAMP,SYNCHRO	1
32	PAOZZ	5310-00-088-1251	81349	M45913/1-4CG5C	NUT,SELF-LOCKING,HE	1
33	PAOZZ	5365-01-044-8400	19207	12254294	SPACER,PLATE	1
34	PAOZZ	5340-01-041-2420	19207	12254293	STRAP,RETAINING	1
35	PAOZZ	5340-01-433-0523	19207	12254293-2	STRAP,RETAINING	1
36	PAOZZ	5340-01-047-9403	19207	12254295	PLATE,MENDING	1
37	PAOZZ	5306-01-013-7020	19207	11668688	BOLT,SELF-LOCKING	2
38	PAFZZ	5340-01-010-6169	19207	11684148	BRACKET,ANGLE	1

END OF FIGURE

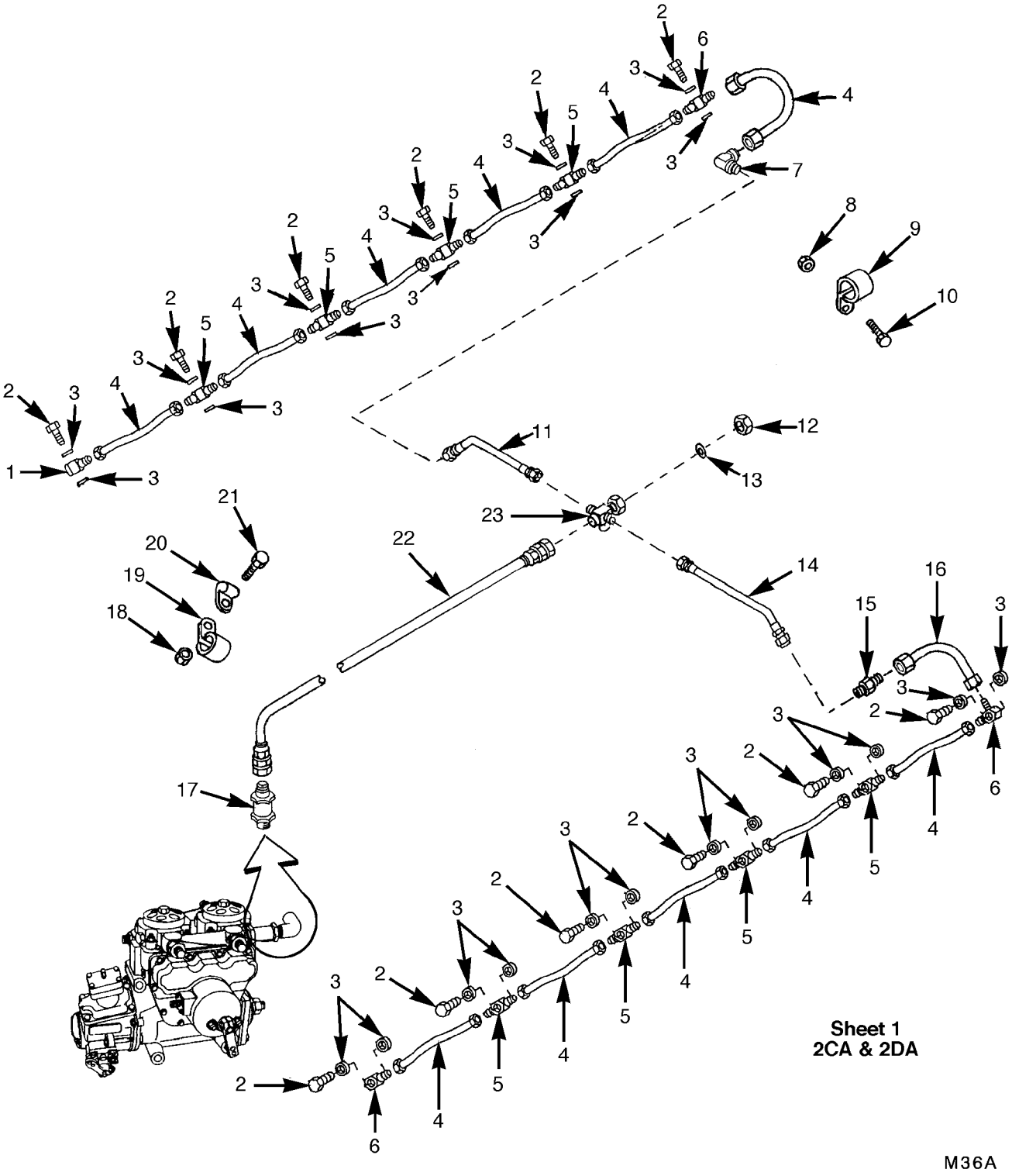

FIGURE 38. FUEL INJECTOR NOZZLE FUEL RETURN HOSES
(SHEET 1 OF 3)

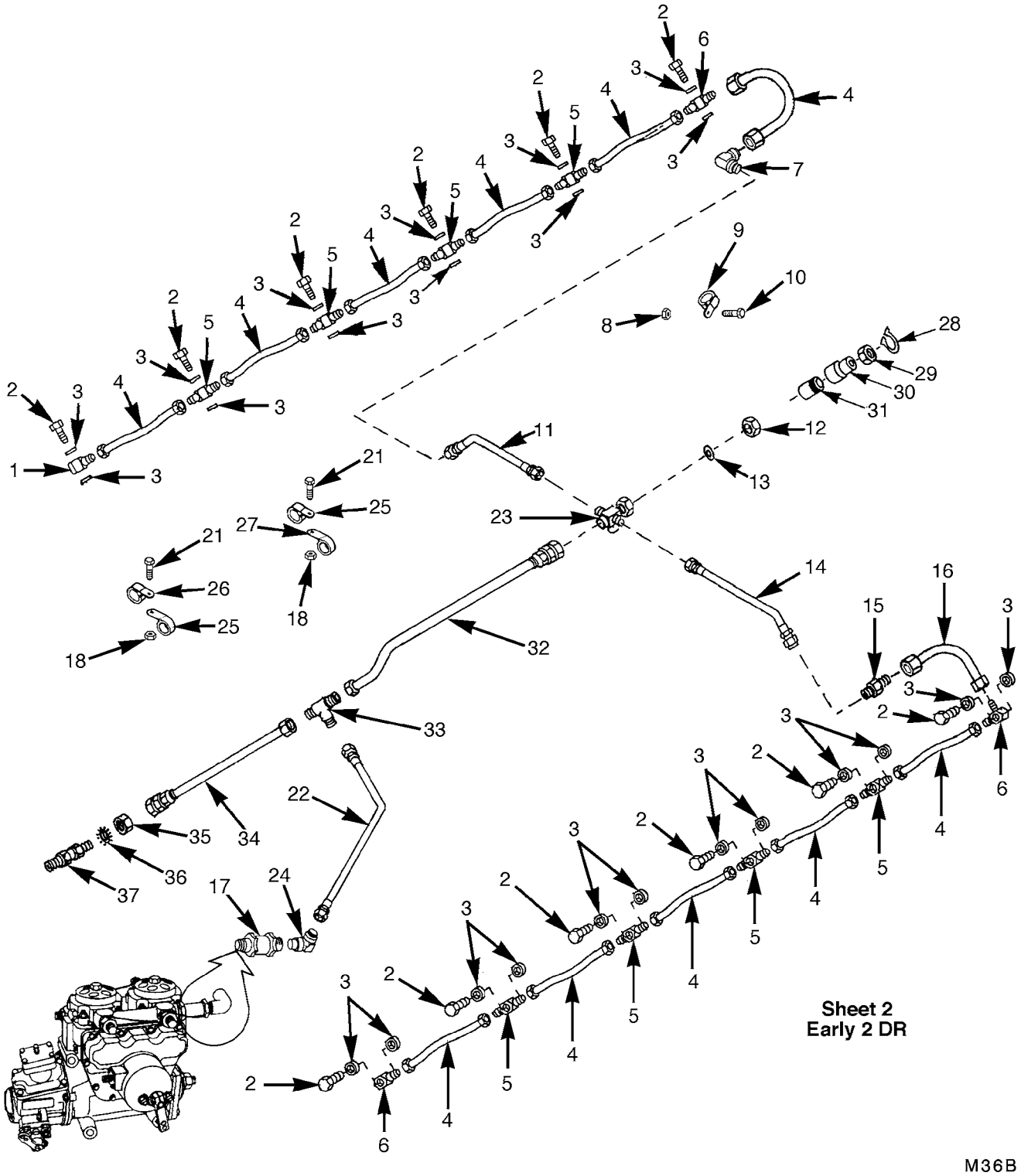

FIGURE 38. FUEL INJECTOR NOZZLE FUEL RETURN HOSES
(SHEET 2 OF 3)

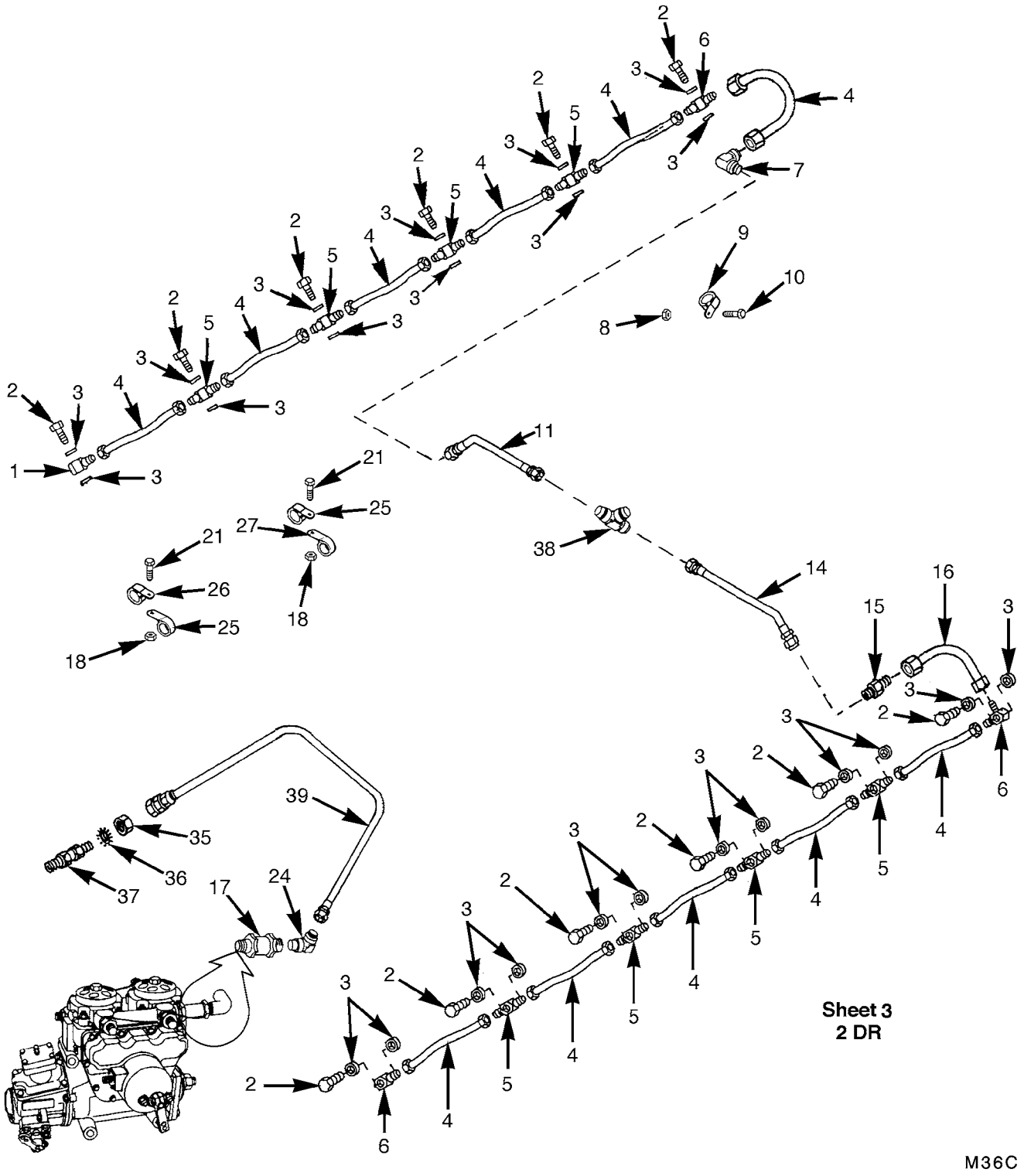

FIGURE 38. FUEL INJECTOR NOZZLE FUEL RETURN HOSES
(SHEET 3 OF 3)

(1) ITEM NO.	(2) SMR CODE	(3) NSN	(4) CAGEC	(5) PART NUMBER	(6) DESCRIPTION AND USABLE ON CODES(UOC)	(7) QTY
					GROUP 0302: FUEL PUMPS	
					FIG.38 FUEL INJECTOR NOZZLE FUEL RETURN HOSES	
1	PAOZZ	4730-00-678-3299	19207	7324661	TEE,TUBE	1
2	PAOZZ	4730-01-106-4008	19207	7323992	BOLT,FLUID PASSAGE	12
3	PAOZZ	5310-00-678-5370	19207	7323994	WASHER,FLAT PART OF KIT P/N 5704488	24
4	PAOZZ	4720-00-475-3435	96906	MS52104C4-0074	HOSE ASSEMBLY,NONME	11
5	PAOZZ	4730-01-228-1045	19207	7323993	CROSS,TUBE	8
6	PAOZZ	4730-01-011-3961	19207	11684208	CONNECTOR,MULTIPLE,	3
7	PAOZZ	4730-00-993-7764	96906	MS51505A4	ELBOW,TUBE	1
8	PAOZZ	5310-00-088-0553	96906	MS21044N5	NUT,SELF-LOCKING,HE	4
9	PAOZZ	5340-00-881-5303	96906	MS21333-45	CLAMP,LOOP	4
10	PAOZZ	5306-01-015-5673	21450	425593	BOLT,ASSEMBLED WASH	4
11	PAOZZ	4710-01-009-4306	19207	11684255	TUBE ASSEMBLY,METAL	1
12	PAOZZ	5310-00-298-9252	24617	423884	NUT,PLAIN,HEXAGON	1
13	PAOZZ	5310-00-809-8540	96906	MS27183-25	WASHER,FLAT	1
14	PAOZZ	4710-01-011-9104	19207	11684256	TUBE ASSEMBLY,METAL	1
15	PAOZZ	4730-00-825-7304	96906	MS51501A4	NIPPLE,TUBE	1
16	PAOZZ	4720-01-031-0519	96906	MS8005E100C	HOSE ASSEMBLY,NONME	1
17	PAOZZ	4820-00-790-2301	92003	F60A0051	VALVE,CHECK	1
18	PAOZZ	5310-00-902-6676	96906	MS21083N3	NUT,SELF-LOCKING,HE	3
19	PAOZZ	5340-00-989-9222	96906	MS21333-74	CLAMP,LOOP	1
20	PAOZZ	5340-00-057-2904	96906	MS21333-71	CLAMP,LOOP	1
21	PAOZZ	5305-00-993-1851	96906	MS35207-267	SCREW,MACHINE	3
22	PAOZZ	4720-00-792-5393	19207	10882940	HOSE ASSEMBLY,NONME	1
23	PAOZZ	4730-00-803-7728	19207	10865290	CROSS,TUBE	1
24	PAOZZ	4730-00-555-1764	96906	MS51504A8	ELBOW,PIPE TO TUBE UOC:EFR	1
25	PAOZZ	5340-00-050-2740	96906	MS21333-75	CLAMP,LOOP UOC:EFR	3
26	PAOZZ	5340-00-922-6300	96906	MS21333-77	CLAMP,LOOP UOC:EFR	2
27	PAOZZ	5340-00-091-3790	96906	MS21333-72	CLAMP,LOOP UOC:EFR	1
28	PAOZZ	5325-00-803-7305	96906	MS16624-1062	RING,RETAINING UOC:EFR	1
29	PAOZZ	4730-00-153-7045	96906	MS51823-7	NUT,TUBE COUPLING UOC:EFR	1
30	PAOZZ	4730-00-146-0333	96906	MS51825-7A	SLEEVE,CLINCH,TUBE UOC:EFR	1
31	PAOZZ	5340-01-030-4401	19207	11682602	PLUG ASSEMBLY,SEALI UOC:EFR	1
32	PAOZZ	4720-01-030-8796	96906	MS8005H060A	HOSE ASSEMBLY,NONME UOC:EFR	1
33	PAOZZ	4730-00-804-7944	96906	MS24402-8	TEE,TUBE UOC:EFR	1
34	PAOZZ	4720-01-035-6877	96906	MS8005H120A	HOSE ASSEMBLY,NONME UOC:EFR	1
35	PAOZZ	5310-00-208-5775	81343	AS5178-08	NUT,PLAIN,HEXAGON UOC:EFR	1
36	PAOZZ	5310-00-275-3683	96906	MS35335-40	WASHER,LOCK UOC:EFR	1
37	PAOZZ	4730-00-800-9872	96906	MS24393-8	NIPPLE,TUBE UOC:EFR	1
38	PAOZZ	4730-00-834-5374	96906	MS24402J4	TEE,TUBE UOC:EFR	1
39	PAOZZ	4720-01-268-7902	96906	MS8005H494A	HOSE ASSEMBLY,NONME UOC:EFR	1

END OF FIGURE

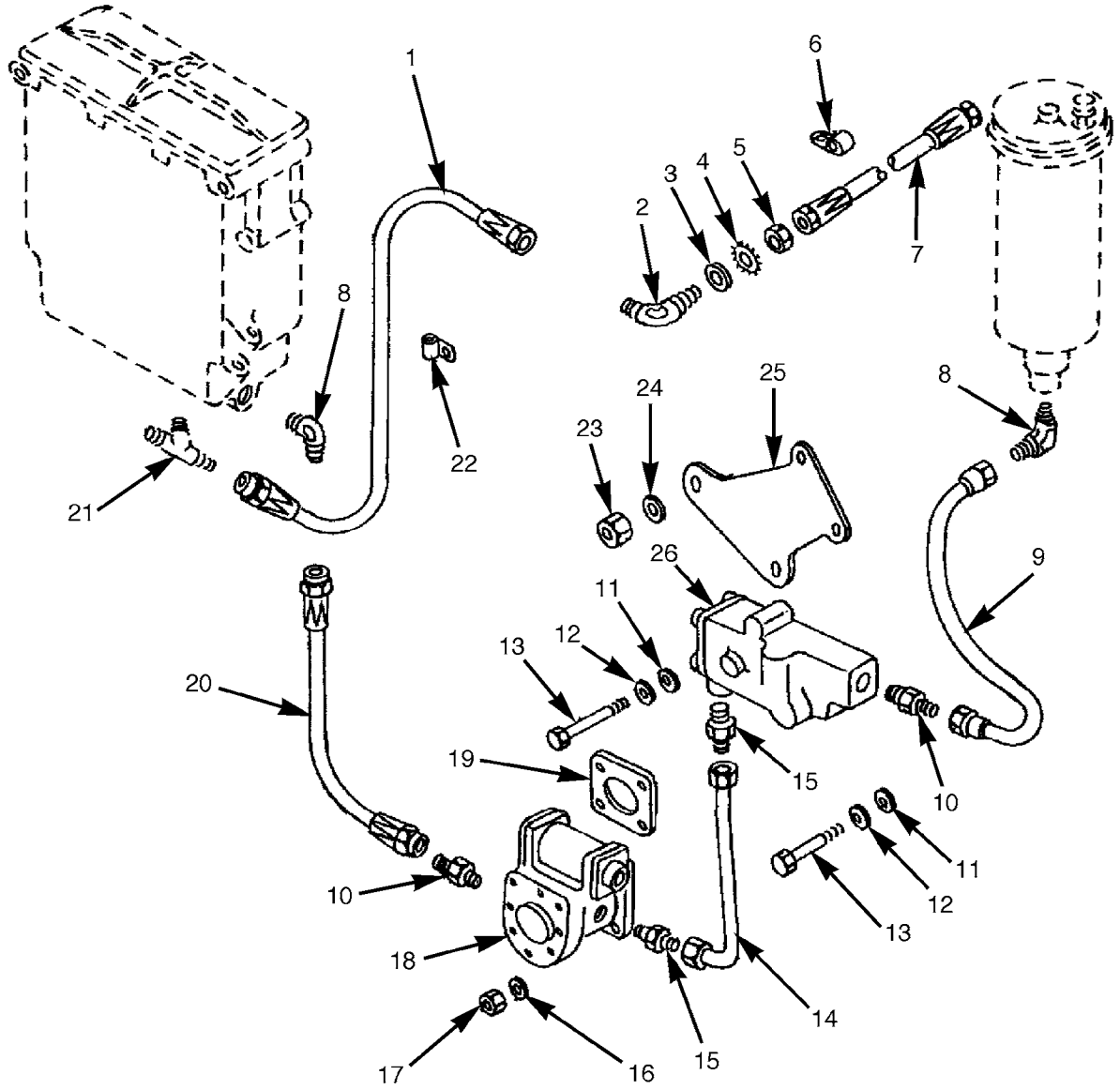

Sheet 1

MODEL AVDS-1790-2CA
AND
AVDS-1790-2DA

M37A

FIGURE 39. FUEL PUMP AND FUEL BACKFLOW VALVE
(SHEET 1 OF 2)

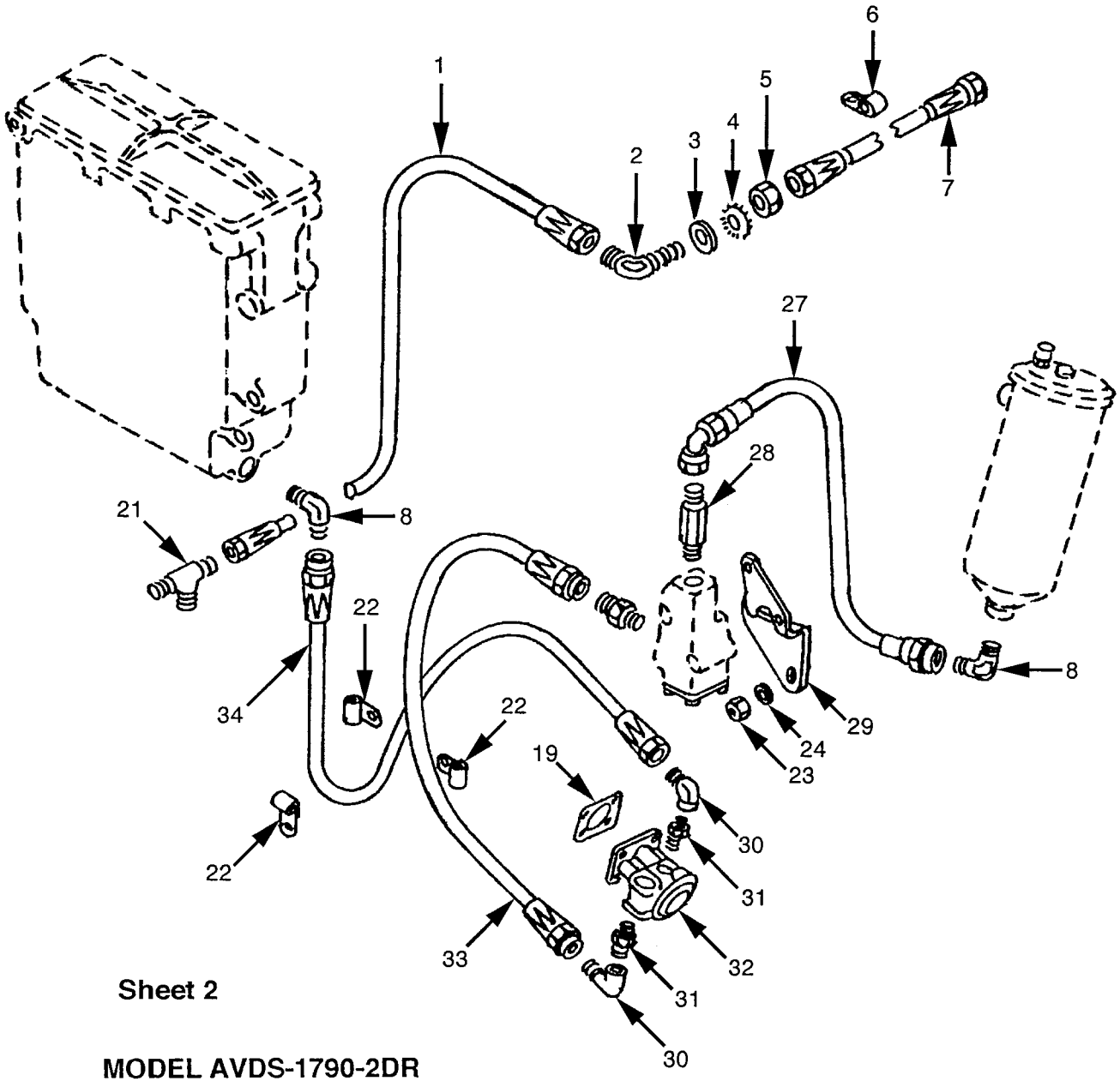

M37BR1

FIGURE 39. FUEL PUMP AND FUEL BACKFLOW VALVE
(SHEET 2 OF 2)

(1) ITEM NO.	(2) SMR CODE	(3) NSN	(4) CAGEC	(5) PART NUMBER	(6) DESCRIPTION AND USABLE ON CODES(UOC)	(7) QTY
					GROUP 0302: FUEL PUMPS	
					FIG.39 FUEL PUMP AND FUEL BACKFLOW VALVE	
1	PAOZZ	4720-00-461-9797	96906	MS28741-8-0300	HOSE ASSEMBLY,NONME	1
2	PAOZZ	4730-01-179-1214	19207	8761546	ELBOW,TUBE	1
3	PAOZZ	5310-00-809-8533	96906	MS27183-23	WASHER,FLAT	1
4	PAOZZ	5310-00-275-3683	96906	MS35335-40	WASHER,LOCK	1
5	PAOZZ	5310-00-208-5775	88044	AN924-8	NUT,PLAIN,HEXAGON	1
6	PAOZZ	5340-00-091-3790	96906	MS21333-72	CLAMP,LOOP	2
7	PAOZZ	4720-00-678-3285	19207	8761510	HOSE ASSEMBLY,NONME	1
8	PAOZZ	4730-00-902-3188	19207	10935536	ELBOW,PIPE TO TUBE	2
9	PAOZZ	4720-00-274-9335	96906	MS28741-8-0120	HOSE ASSEMBLY,NONME UOC:2CA,2DA	1
10	PAOZZ	4730-00-402-5143	02978	10951334	ADAPTER,STRAIGHT,PI	2
11	PAOZZ	5310-00-141-1795	88044	AN960-416	WASHER,FLAT	2
12	PAOZZ	5310-00-582-5965	80205	MS35338-44	WASHER,LOCK	2
13	PAOZZ	5305-00-905-2712	80204	B1821BH025F225D	SCREW,CAP,HEXAGON H	2
14	PAOZZ	4710-00-821-0659	19207	10882768	TUBE ASSEMBLY,METAL UOC:2CA,2DA	1
15	PAOZZ	4730-00-409-3893	96906	MS51819-9	ADAPTER,STRAIGHT,PI UOC:2CA,2DA	2
16	PAOZZ	5310-00-167-0820	80205	NAS1149F0563P	WASHER,FLAT	4
17	PAOZZ	5310-00-088-0553	96906	MS21044N5	NUT,SELF-LOCKING,HE	4
18	AFOFF		19207	10882763-1	PUMP ASSEMBLY (FOR COMPONENT PARTS SEE TM9-2910-213-34P,GROUP 0302) UOC:2CA,2DA	1
19	PAOZZ	5330-00-741-5354	19207	7415354	GASKET PART OF KIT P/N 5704488	1
20	PAOZZ	4720-00-420-4396	96906	MS28741-8-0134	HOSE ASSEMBLY,NONME UOC:2CA,2DA	1
21	PAOZZ	4730-00-995-1590	96906	MS51512A8	TEE,PIPE TO TUBE	1
22	PAOZZ	5340-00-282-7509	96906	MS21333-62	CLAMP,LOOP UOC:2CA,2DA	1
23	PAOZZ	5310-00-959-1488	96906	MS51922-21	NUT,SELF-LOCKING,HE	2
24	PAOZZ	5310-00-535-6688	19207	8745480	WASHER,FLAT	2
25	PAOZZ	5340-00-937-1450	19207	10882766	BRACKET,MOUNTING UOC:2CA,2DA	1
26	PAODD	4820-00-795-1795	19207	10882764	VALVE,CHECK (FOR COMPONENT PARTS SEE GROUP 0302: FUEL BACK FLOW VALVE)	1
27	PAOZZ	4720-01-026-4828	19207	11684294	HOSE ASSEMBLY,NONME UOC:EFR	1
28	PAOZZ	4730-01-026-0443	19207	11668891	ADAPTER,STRAIGHT,PI UOC:EFR	1
29	PAOZZ	5340-00-563-6951	19207	11682615	BRACKET,MOUNTING UOC:EFR	1
30	PAOZZ	4730-01-284-7065	96906	MS51506B8S	ELBOW,PIPE TO TUBE UOC:EFR	2
31	PAOZZ	4730-00-720-4620	88044	AN911-3J	NIPPLE,PIPE UOC:EFR	2
32	AFOFF		19207	8761431-1	PUMP,FUEL,METERING (FOR COMPONENT PARTS SEE TM9-2910-213-34P,GROUP 0302) UOC:EFR	1
33	PAOZZ	4720-00-274-9356	96906	MS28741-8-0240	HOSE ASSEMBLY,NONME UOC:EFR	1
34	PAOZZ	4720-00-766-0967	96906	MS28741-8-0330	HOSE ASSEMBLY,NONME UOC:EFR	1

END OF FIGURE

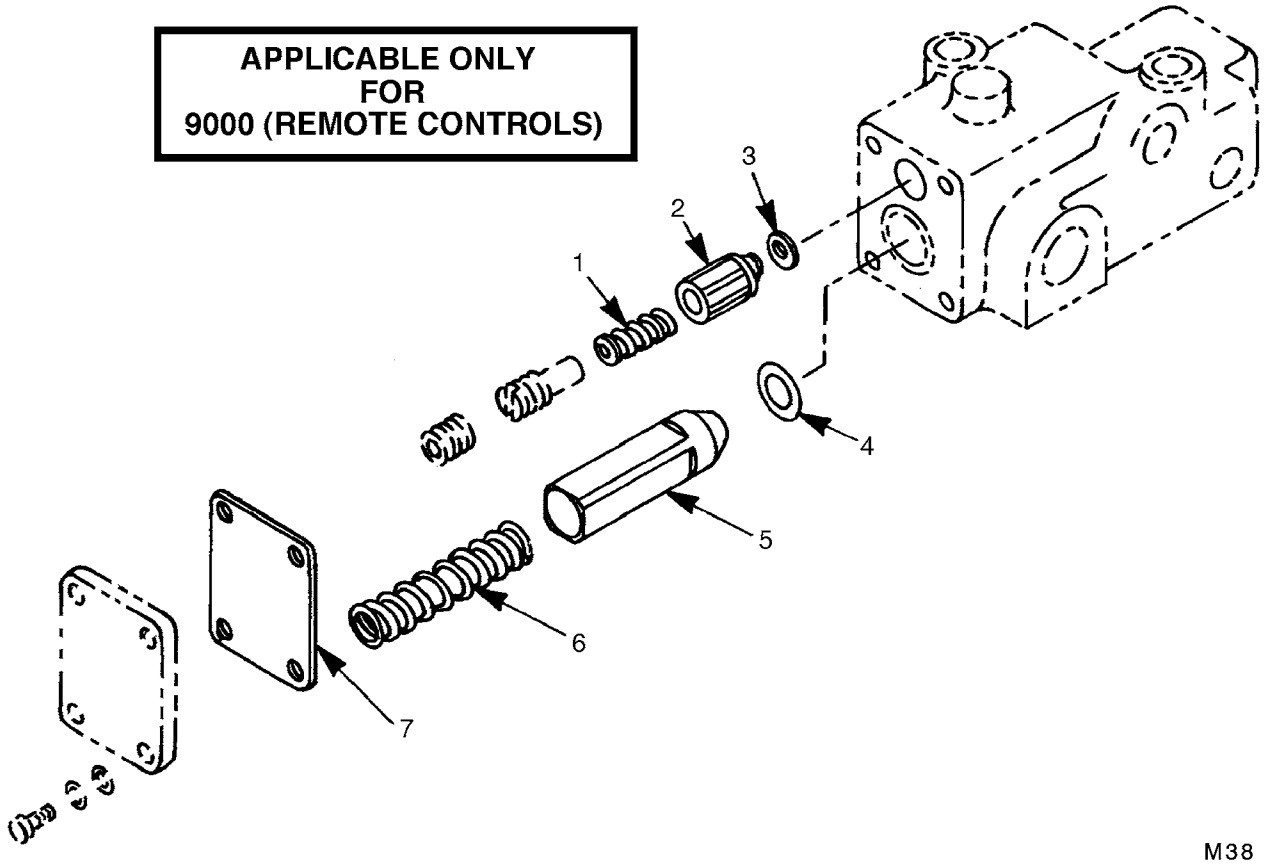

FIGURE 40. FUEL BACKFLOW VALVE

(1) ITEM NO.	(2) SMR CODE	(3) NSN	(4) CAGEC	(5) PART NUMBER	(6) DESCRIPTION AND USABLE ON CODES(UOC)	(7) QTY
					GROUP 0302: FUEL PUMPS	
					FIG.40 FUEL BACKFLOW VALVE	
1	KDDZZ		19207	12254390	SPRING PART OF KIT P/N 5705053.	1
2	KDDZZ		19207	12254389	VALVE,CONTROL PART OF KIT P/N 5705053	1
3	PDDZZ	5331-01-107-4956	81349	M83461/1-006	O-RING PART OF KIT P/N 5705053	1
4	PDDZZ	5331-01-107-3121	81349	M83461/1-111	O-RING PART OF KIT P/N 5705053	1
5	KDDZZ		19207	12254391	VALVE,SLEEVE PART OF KIT P/N 5705053	1
6	KDDZZ		19207	12254392	SPRING PART OF KIT P/N 5705053.	1
7	KDDZZ		19207	12254395	GASKET PART OF KIT P/N 5705053	1

END OF FIGURE

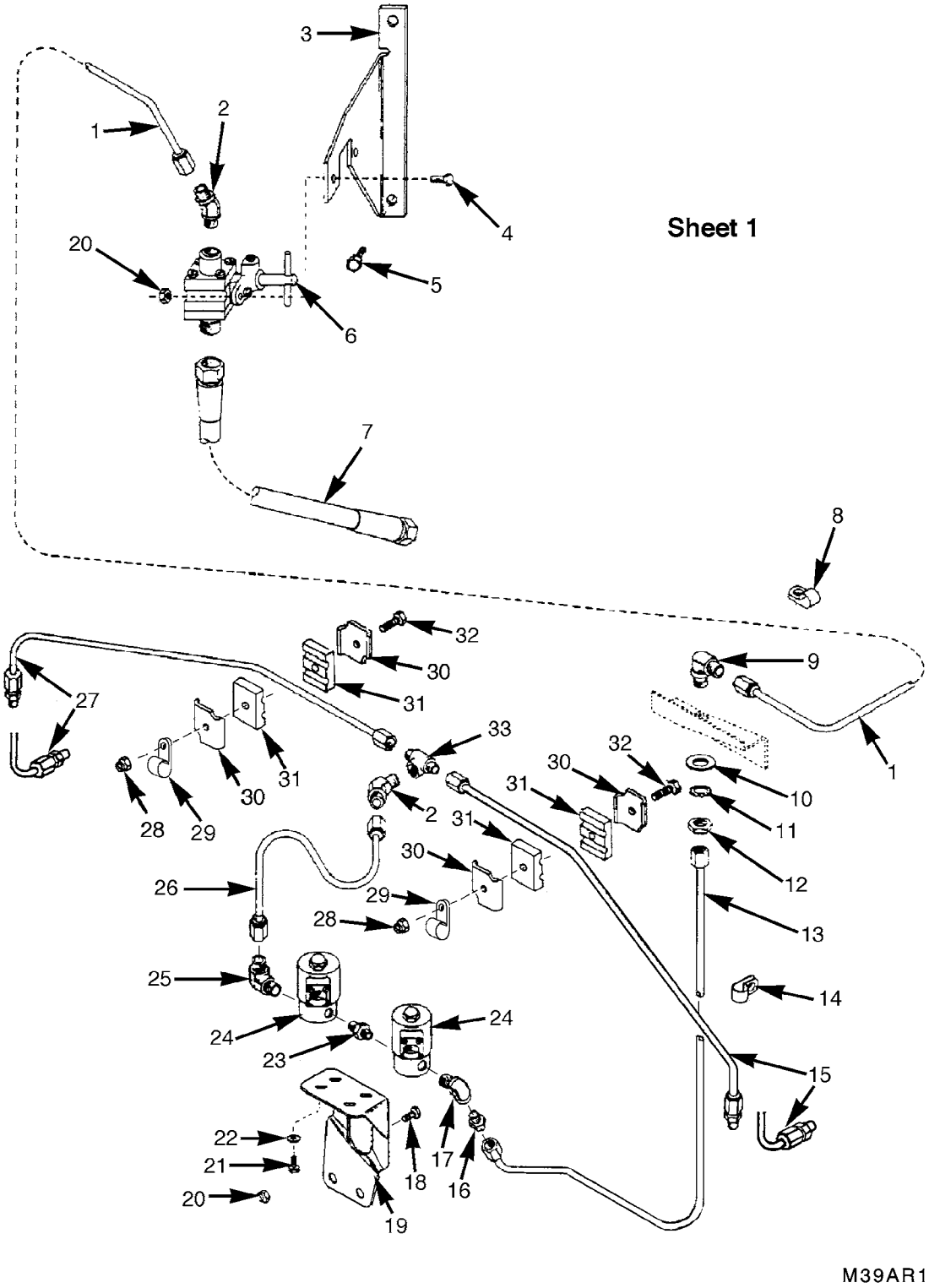

FIGURE 41. SMOKE GENERATING SYSTEM
(SHEET 1 OF 2)

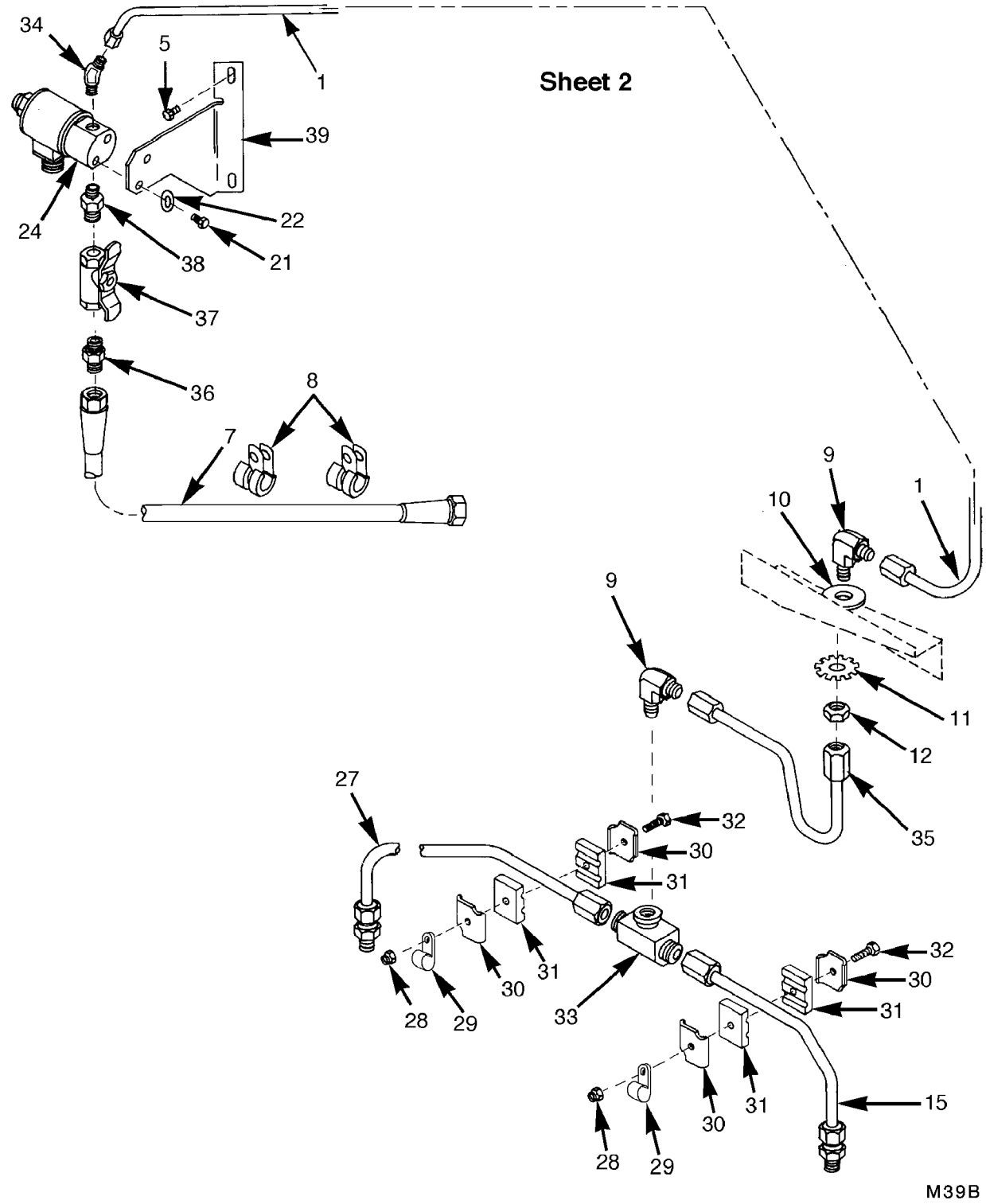

FIGURE 41. SMOKE GENERATING SYSTEM
(SHEET 2 OF 2)

(1) ITEM NO.	(2) SMR CODE	(3) NSN	(4) CAGEC	(5) PART NUMBER	(6) DESCRIPTION AND USABLE ON CODES(UOC)	(7) QTY
					GROUP 0302: FUEL PUMPS	
					FIG.41 SMOKE GENERATING SYSTEM	
1	PAOZZ	4710-01-330-8073	19207	12354367	TUBE ASSEMBLY,METAL	1
2	PAOZZ	4730-01-036-5064	96906	MS51817-5	ELBOW,PIPE TO TUBE	2
3	PBOZZ	5340-01-136-4673	19207	12275809	BRACKET,ANGLE	1
4	PAOZZ	5306-00-068-0514	80204	B1821BH025F088N	BOLT,MACHINE	2
5	PAOZZ	5305-00-042-5640	24617	425640	SCREW,ASSEMBLED WAS	2
6	PAOZZ	4820-01-136-4681	19207	11669749	VALVE,BALL	1
7	PAOZZ	4720-00-115-0170	96906	MS28741-8-0194	HOSE ASSEMBLY,NONME	1
8	PAOZZ	5340-00-738-5174	19207	7385174	CLAMP,LOOP	3
9	PAOZZ	4730-00-689-1236	96906	MS51855-9	ELBOW,TUBE	1
10	PAOZZ	5310-00-809-3079	96906	MS27183-19	WASHER,FLAT	1
11	PAOZZ	5310-00-616-6354	96906	MS35335-38	WASHER,LOCK	1
12	PAOZZ	4730-00-375-6403	96906	MS51860-55	LOCKNUT,TUBE FITTIN	1
13	PAOZZ	4710-01-109-8031	19207	12275780	TUBE ASSEMBLY,METAL	1
14	PAOZZ	5340-00-057-3037	96906	MS21333-111	CLAMP,LOOP	1
15	PAOZZ	4710-01-146-1903	19207	12275808	TUBE ASSEMBLY,METAL UOC:2CA,2DA	1
15	PAOZZ	4710-01-139-1863	19207	12275812	TUBE ASSEMBLY,METAL UOC:EFR	1
16	PAOZZ	4730-01-035-7544	96906	MS51819-37	ADAPTER,STRAIGHT,PI	1
17	PAOZZ	4730-00-035-8036	19207	8365771	ELBOW,PIPE	1
18	PAOZZ	5306-00-068-0513	80204	B1821BH025F075N	BOLT,MACHINE	1
19	PBOZZ	5945-01-070-5962	19207	12275712	BRACKET,SOLENOID	1
20	PAOZZ	5310-00-061-7325	96906	MS21045-4	NUT,SELF-LOCKING,HE	3
21	PAOZZ	5306-00-042-5828	21450	425828	BOLT,ASSEMBLED WASH	4
22	PAOZZ	5310-00-167-0818	80205	NAS1149F0363P	WASHER,FLAT	4
23	PAOZZ	4730-00-186-7798	10001	AN911-2	NIPPLE,PIPE	1
24	PBOZZ	4810-00-487-2775	81978	V5S55680	VALVE,SOLENOID	2
25	PAOZZ	4730-00-127-4461	96906	MS51815-6	ELBOW,PIPE TO TUBE	1
26	PAOZZ	4710-01-109-8033	19207	12275782	TUBE ASSEMBLY,METAL	1
27	PAOZZ	4710-01-146-1904	19207	12275807	TUBE ASSEMBLY,METAL UOC:2CA,2DA	1
27	PAOZZ	4710-01-140-6558	19207	12275810	TUBE ASSEMBLY,METAL UOC:EFR	1
28	PAOZZ	5310-00-982-4912	96906	MS21045-5	NUT,SELF-LOCKING,HE UOC:2CA,2DA	2
29	PAOZZ	5340-00-050-9077	96906	MS21333-119	CLAMP,LOOP UOC:EFR	3
29	PAOZZ	5340-00-057-3025	96906	MS21333-108	CLAMP,LOOP UOC:2CA,2DA	3
30	PAOZZ	5340-01-017-6947	19207	11684156	STRAP,RETAINING UOC:2CA,2DA	4
31	PAOZZ	5342-01-015-9789	19207	11684157	FAIRLEAD HALF,TUBUL UOC:2CA,2DA	4
32	PAOZZ	5306-00-051-4081	80204	B1821BH031F175N	BOLT,MACHINE UOC:2CA,2DA	2
33	PAOZZ	4730-01-109-7971	19207	11669685	TEE,PIPE TO TUBE	1
34	PAOZZ	4730-01-036-5064	96906	MS51817-25	ELBOW,PIPE TO TUBE	1
35	PAOZZ	4710-01-511-4540	19207	12354465	TUBE ASSEMBLY,METAL	1
36	PAOZZ	4730-00-813-9611	96906	MS51500A8	ADAPTER,STRAIGHT,PI	1
37	PAOZZ		19207	12354466	VALVE	1
38	PAOZZ	4730-00-467-2601	81343	4-6140137	NIPPLE,PIPE	1
39	PBOZZ	5340-01-513-3896	19207	12468924	BRACKET,MOUNTING UOC:2CA,2DA	1
39	PBOZZ	5340-01-513-3876	19207	12468927	BRACKET,MOUNTING UOC:EFR	1

END OF FIGURE

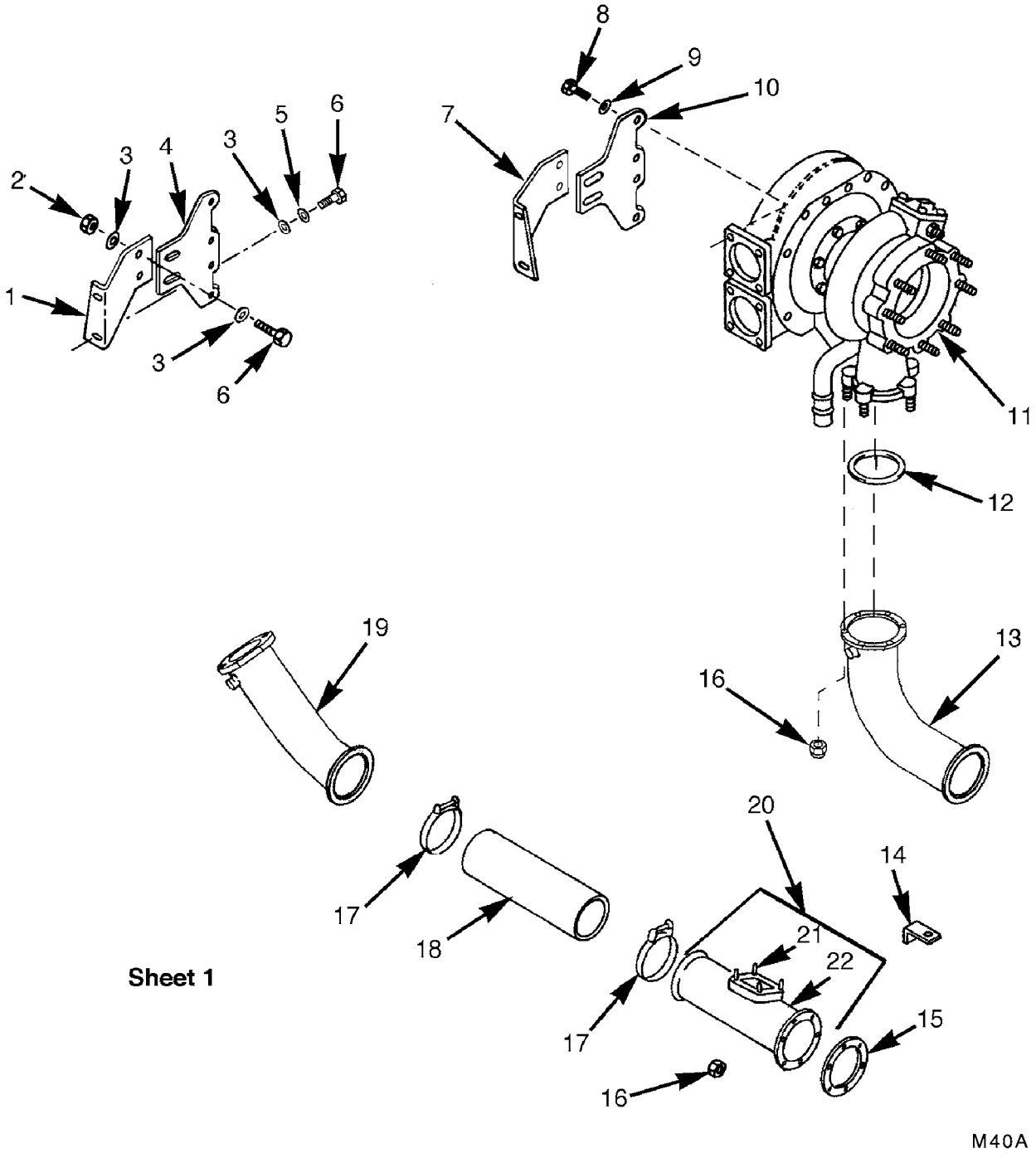

FIGURE 42. TURBOSUPERCHARGER, TIE ROD, AND BASE
(SHEET 1 OF 2)

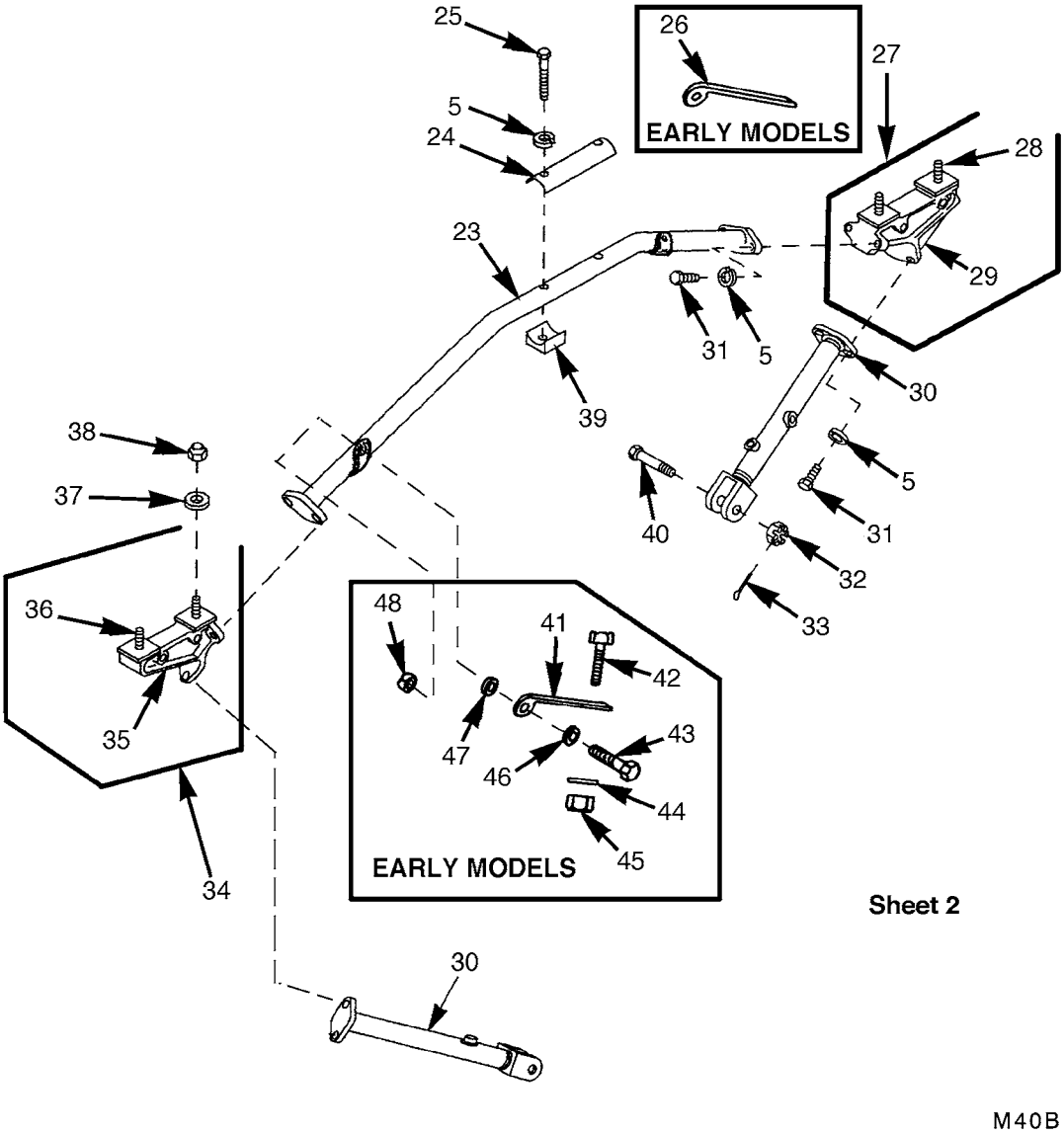

FIGURE 42. TURBOSUPERCHARGER, TIE ROD, AND BASE
(SHEET 2 OF 2)

(1) ITEM NO.	(2) SMR CODE	(3) NSN	(4) CAGEC	(5) PART NUMBER	(6) DESCRIPTION AND USABLE ON CODES(UOC)	(7) QTY
					GROUP 0305: TURBOCHARGER	
					FIG.42 TURBOSUPERCHARGER, TIE ROD, AND BASE	
1	PBOZZ	5342-01-512-8637	19207	12354423	BRACKET,ENGINE ACCE . . . . . UOC:EFR	2
1	PBOZZ	5342-01-511-4526	19207	12354426	BRACKET,ENGINE ACCE UOC:2DA	2
1	PBOZZ	5342-01-513-5734	19207	12354429-1	BRACKET,ENGINE ACCE	2
2	PAOZZ	5310-00-959-1488	96906	MS51922-21	NUT,SELF-LOCKING,HE	4
3	PAOZZ	5310-00-776-7318	19207	7767318	WASHER,FLAT	8
4	PBFZZ	5342-01-512-8135	19207	12354422	BRACKET,ENGINE ACCE . . . . . UOC:EFR	1
4	PBFZZ	5342-01-513-0837	19207	12354427	BRACKET,ENGINE ACCE UOC:2CA	1
4	PBFZZ	5342-01-511-4522	19207	12354428	BRACKET,ENGINE ACCE UOC:2DA	1
5	PAFZZ	5310-00-637-9541	96906	MS35338-46	WASHER,LOCK.	10
6	PAOZZ	5305-00-269-3238	80204	B1821BH038F125N	SCREW,CAP,HEXAGON H	8
7	PBOZZ	5342-01-513-7484	19207	12354421	BRACKET,ENGINE ACCE . . . . . UOC:EFR	2
7	PBOZZ	5342-01-513-5734	19207	12354429-1	BRACKET,ENGINE ACCE UOC:2DA	2
7	PFOZZ	5342-01-511-4534	19207	12354429-2	BRACKET,ENGINE ACCE UOC:2CA	2
8	PAFZZ	5305-00-588-2959	80205	MS35308-368	SCREW,CAP,HEXAGON H	8
9	PAFZZ	5310-00-184-8974	96906	MS9320-12	WASHER,FLAT	8
10	PBFZZ	5342-01-513-4776	19207	12354420	BRACKET,ENGINE ACCE . . . . . UOC:EFR	2
10	PBFZZ	5342-01-513-0837	19207	12354427	BRACKET,ENGINE ACCE UOC:2CA,2DA	2
11	PAFHD	2950-01-510-3622	19207	12275893	TURBOSUPERCHARGER,E (OPTIONAL WITH P/N 466392-5001;FOR COMPONENT PARTS SEE TM9-2990-205-34&P,GROUP 0305)	2
11	PAFHD	2950-01-167-1699	08179	466392-5001	TURBOSUPERCHARGER,E (OPTIONAL WITH P/N 187727;FOR COMPONENT PARTS SEE TM9-2990-206-34&P,GROUP 0305)	2
12	**PAFZZ**	**5330-01-491-5870**	**19207**	**7320459**	**GASKET PART OF KIT P/N 5704488 . . . . . .**	**2**
13	PBFZZ	4730-01-022-6012	19207	11684184	ELBOW,FLANGE TO HOS. . . . . UOC:EFR	1
13	PBFZZ	4730-00-406-4610	19207	8682749	ELBOW,FLANGE TO HOS. UOC:2CA,2DA	1
14	PAFZZ	5340-01-332-9372	19207	12354381	BRACKET,ANGLE.	2
15	PAFZZ	5330-00-678-4681	19207	8682797	GASKET PART OF KIT P/N 5704488	2
16	PAFZZ	5310-00-088-0553	80205	MS21044N5	NUT,SELF-LOCKING,HE	24
17	PAFZZ	4730-01-513-2526	19207	7340053	CLAMP,HOSE	4
18	PAFZZ	4720-01-465-6575	19207	8761490-2	HOSE,NONMETALLIC	2
19	PAFZZ	4730-00-561-7801	19207	11682625	ELBOW,OUTLET. . . . . UOC:EFR	1
19	PAFFF	4730-00-406-4611	19207	8682748	ELBOW,FLANGE TO TUB UOC:2CA,2DA	1
20	PAFFF	4710-00-406-4614	19207	8761082	TUBE ASSEMBLY,METAL	2
21	PAFZZ	5307-00-837-7791	02978	402126	.STUD,PLAIN STANDARD.	4
22	XAFZZ		19207	8682519	.TUBE,INTAKE.	1
23	PAFZZ	2990-01-011-2319	19207	11684186	TIE ROD,TURBOCHARGE. . . . . UOC:EFR	1
23	PBFZZ	2530-00-402-4430	19207	8682558	DRAG LINK-TIE ROD. UOC:2CA,2DA	1
24	PBFZZ	5340-00-453-5387	19207	8682451	STRAP,RETAINING.	1
25	PAFZZ	5305-00-269-3243	80204	B1821BH038F225N	SCREW,CAP,HEXAGON H	2
26	PBFZZ	5340-00-399-5300	19207	11684137-2	BRACKET,MOUNTING UOC:2CA,2DA	1

(1) ITEM NO.	(2) SMR CODE	(3) NSN	(4) CAGEC	(5) PART NUMBER	(6) DESCRIPTION AND USABLE ON CODES(UOC)	(7) QTY
26	PAFZZ	5342-01-011-9022	19207	11684182	BRACKET,ENGINE ACCE UOC:EFR	1
27	PAFFF	5340-01-048-8600	19207	11684203	BRACKET,MOUNTING RIGHT BANK UOC:EFR	1
27	PAFFF	2990-00-402-4433	19207	8761086	BASE ASSEMBLY,TURBO RIGHT BANK UOC:2CA,2DA	1
28	PAFZZ	5307-00-682-5820	19207	8682787	.STUD,PLAIN STANDARD,RIGHT BANK	2
29	XAFZZ		19207	11684202	.BASE RIGHT BANK UOC:EFR	1
29	XAFZZ		19207	8682694	.BASE,TURBO RIGHT BANK UOC:2CA,2DA	1
30	PBFZZ	2990-00-402-4432	19207	8682750	SUPPORT ASSEMBLY,TU	2
31	PAFZZ	5305-00-269-2803	96906	MS90726-60	SCREW,CAP,HEXAGON H	8
32	PAFZZ		21450	122978	NUT,PLAIN,SLOTTED,H	2
33	PAFZZ	5315-00-234-1863	80205	MS24665-300	PIN,COTTER	2
34	PAFFF	5340-01-010-9086	19207	11682629-1	BRACKET,MOUNTING LEFT BANK UOC:EFR	1
34	PAFFF	2990-00-402-4433	19207	8761086	BASE ASSEMBLY,TURBO LEFT BANK UOC:2CA,2DA	1
35	XAFZZ		19207	11682620-1	.BASE LEFT BANK UOC:EFR	1
35	XAFZZ		19207	8682694	.BASE,TURBO LEFT BANK UOC:2CA,2DA	1
36	PAFZZ	5307-00-682-5820	19207	8682787	.STUD,PLAIN STANDARD,LEFT BANK	2
37	PAFZZ	5310-00-167-0823	88044	AN960-816	WASHER,FLAT	4
38	PAFZZ	5310-00-062-4954	96906	MS21045-8	NUT,SELF-LOCKING,HE	4
39	PBFZZ	2990-00-453-5386	19207	8682752	SEAT,TIE-ROD CLAMP	2
40	PAFZZ	5306-01-512-6695	19207	8761453	BOLT,MACHINE	2
41	PBFZZ	5342-00-409-1483	19207	11684137-1	BRACKET,ENGINE ACCE UOC:2CA,2DA	1
41	PBFZZ	5340-01-046-6814	19207	11684196	BRACKET,ANGLE UOC:EFR	1
42	PAOZZ	5305-00-269-2803	96906	MS90726-60	SCREW,CAP,HEXAGON H	2
43	PAFZZ		80204	B1821BH038138N	SCREW,CAP,HEXAGON H	2
44	PAOZZ	5310-00-809-4061	96906	MS27183-15	WASHER,FLAT	2
45	PAOZZ	5310-00-959-1488	96906	MS51922-21	NUT,SELF-LOCKING,HE	2
46	PAFZZ	5330-00-498-6341	19207	10935478	RETAINER,PACKING	4
47	PAFZZ	5325-00-276-6096	88044	AN931B9-13	GROMMET,NONMETALLIC	2
48	PAFZZ	5310-00-959-1488	96906	MS51922-21	NUT,SELF-LOCKING,HE	2

END OF FIGURE

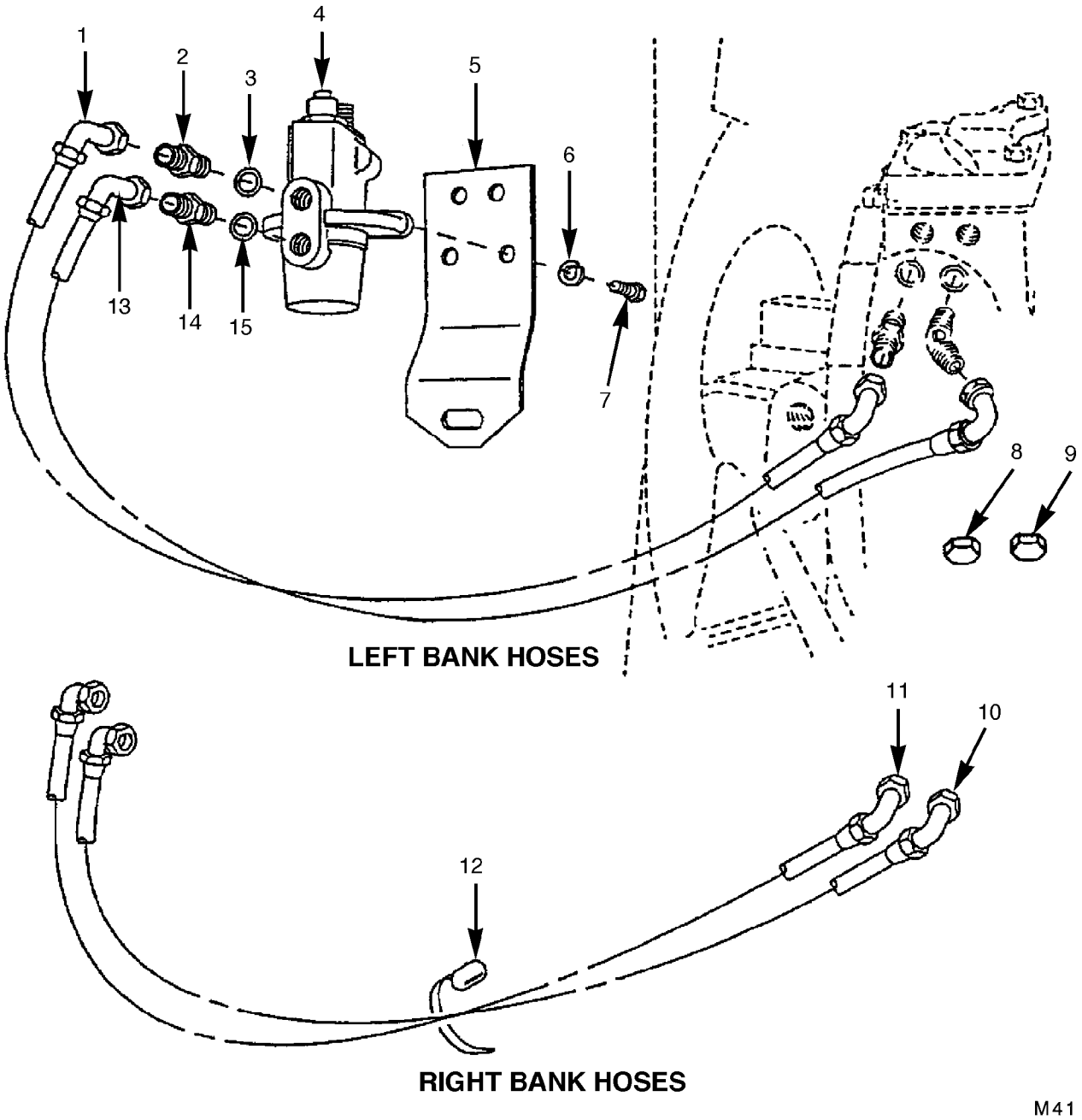

FIGURE 43. DUST DETECTOR SYSTEM

(1) ITEM NO.	(2) SMR CODE	(3) NSN	(4) CAGEC	(5) PART NUMBER	(6) DESCRIPTION AND USABLE ON CODES(UOC)	(7) QTY
					GROUP 0305: TURBOCHARGER	
					FIG.43 DUST DETECTOR SYSTEM	
1	PAOZZ	4720-01-173-4615	96906	MS8005F092F020	HOSE ASSEMBLY,NONME	1
2	PAOZZ	4730-01-007-5232	96906	MS51525A4	ADAPTER,STRAIGHT,TU	4
3	PAOZZ	5331-00-805-2966	81343	MS28778-4	O-RING PART OF KIT P/N 5704488	2
4	PAOZZ	5930-01-147-7912	19207	12275842	SWITCH,PRESSURE	2
5	PBOZZ	5340-01-249-7910	19207	12354347	BRACKET,DOUBLE ANGL	3
6	PAOZZ	5310-00-582-5965	80205	MS35338-44	WASHER,LOCK	6
7	PAOZZ	5305-00-068-0512	80204	B1821BH025F056N	SCREW,CAP,HEXAGON H	6
8	PAOZZ	4730-01-127-3942	96906	MS51532B4S	CAP,TUBE	2
9	PAOZZ	4730-00-948-9682	96906	MS51532B5S	CAP,TUBE	2
10	PAOZZ	4720-01-173-4145	96906	MS8005E145F000	HOSE ASSEMBLY,NONME	1
11	PAOZZ	4720-01-173-4613	96906	MS8005F145F000	HOSE ASSEMBLY,NONME	1
12	PAOZZ	5975-00-074-2072	81343	MS3367-1-9	STRAP,TIEDOWN,ELECT	1
13	PAOZZ	4720-01-173-4614	96906	MS8005E112F020	HOSE ASSEMBLY,NONME	1
14	PAOZZ	4730-00-431-9307	96906	MS51525A5Z	ADAPTER,STRAIGHT,TU	2
15	PAOZZ	5331-00-833-7491	81343	MS28778-5	O-RING PART OF KIT P/N 5704488	2

END OF FIGURE

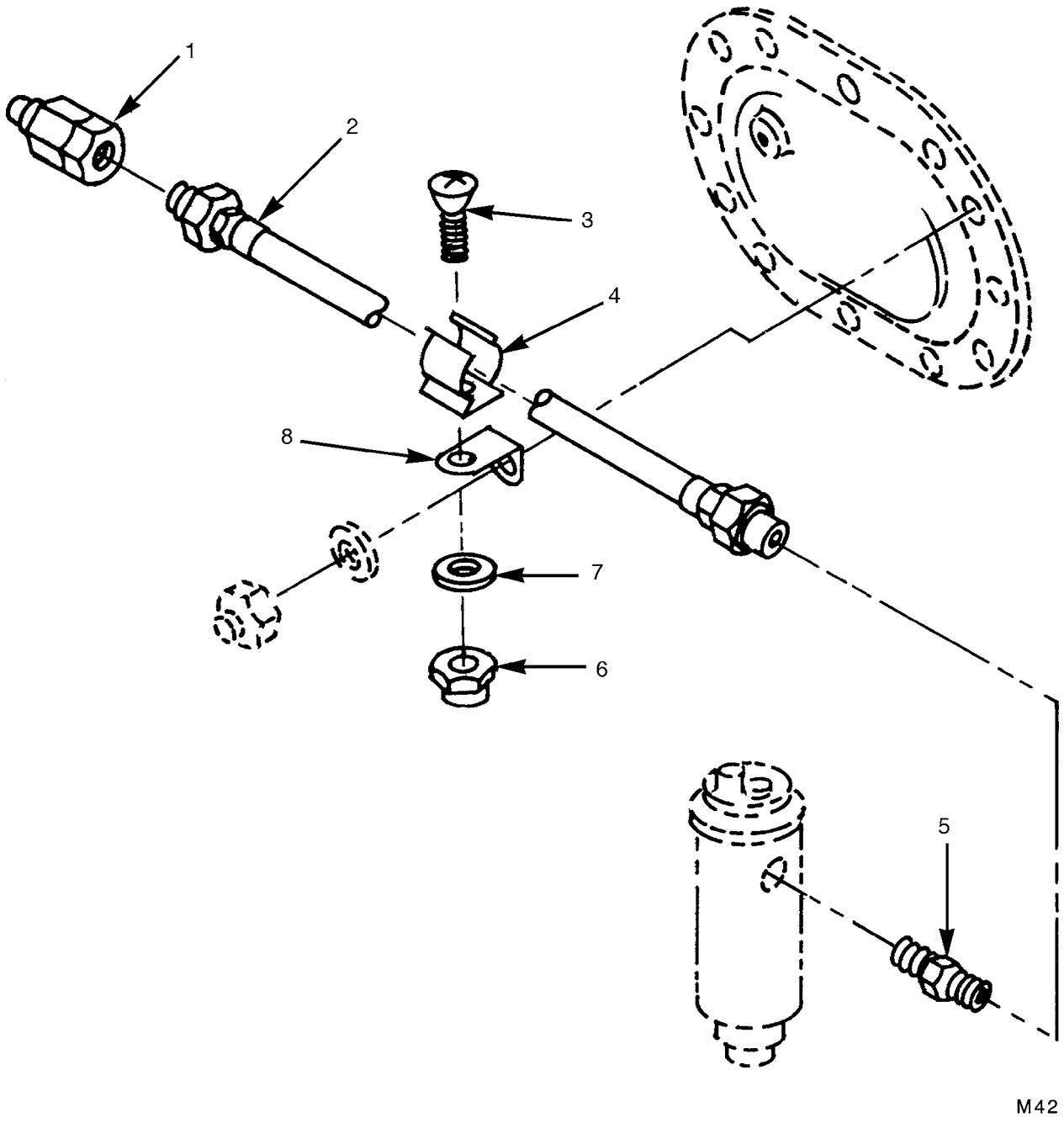

FIGURE 44. FUEL SUPPLY HOSE (MODEL AVDS-1790-2DR)

(1) ITEM NO.	(2) SMR CODE	(3) NSN	(4) CAGEC	(5) PART NUMBER	(6) DESCRIPTION AND USABLE ON CODES(UOC)	(7) QTY
					GROUP 0306: TANKS,LINES,FITTINGS, HEADERS	
					FIG.44 FUEL SUPPLY HOSE (MODEL AVDS-1790-2DR)	
1	PAOZZ	4730-01-167-1997	81361	E150-1-12-5-1A	COUPLING HALF,QUICK . . . . . UOC:EFR	1
2	PAOZZ	4720-00-706-9144	19207	10867369	HOSE ASSEMBLY,NONME . . . . . UOC:EFR	1
3	PAOZZ	5305-00-984-4988	96906	MS35206-228	SCREW,MACHINE . . . . . UOC:EFR	1
4	PAOZZ	5340-00-724-7015	81349	M24066/2-312	CLIP,SPRING TENSION. . . . . UOC:EFR	1
5	PAOZZ	4730-00-807-3003	79470	C3209X8X6	REDUCER,PIPE . . . . . UOC:EFR	1
6	PAOZZ	5310-00-807-1465	80205	MS21042-06	NUT,SELF-LOCKING,EX . . . . . UOC:EFR	1
7	PAOZZ	5310-00-941-3598	96906	MS9320-07	WASHER,FLAT . . . . . UOC:EFR	1
8	PAOZZ	5340-01-275-3402	96906	MS9599-216	BRACKET,ANGLE. . . . . UOC:EFR	1

END OF FIGURE

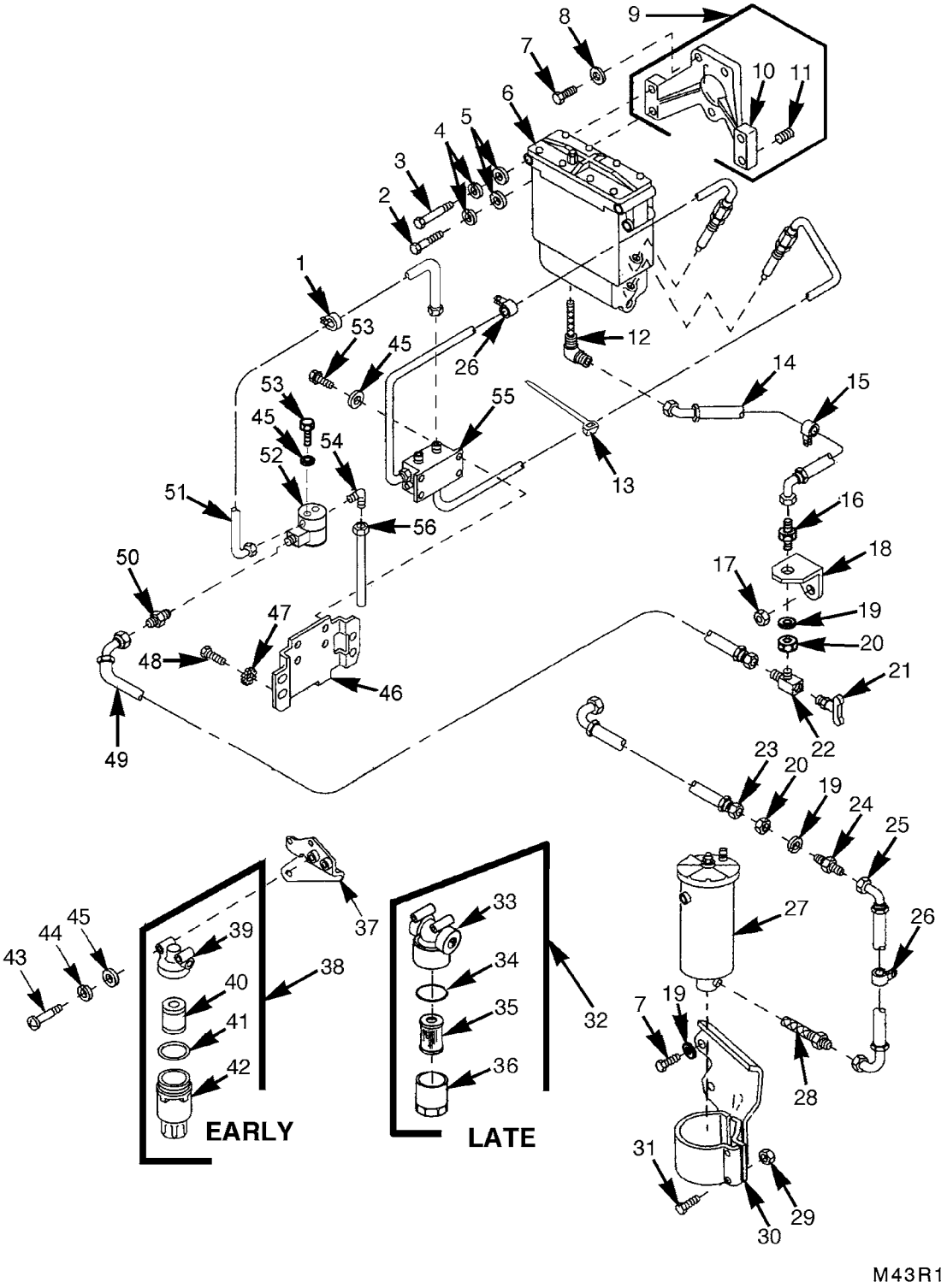

FIGURE 45. WATER SEPARATOR, PRIMARY AND MANIFOLD FUEL FILTERS, AND AUTOMATIC DRAIN CONTROL

(1) ITEM NO.	(2) SMR CODE	(3) NSN	(4) CAGEC	(5) PART NUMBER	(6) DESCRIPTION AND USABLE ON CODES(UOC)	(7) QTY
					GROUP 0309: FUEL FILTERS	
					FIG.45 WATER SEPARATOR, PRIMARY AND MANIFOLD FUEL FILTERS, AND AUTOMATIC DRAIN CONTROL	
1	PAOZZ	5340-00-088-6655	96906	MS21333-101	CLAMP,LOOP	1
2	PAOZZ	5305-01-510-6207	96906	MS90726-48	SCREW,CAP,HEXAGON,H	2
3	PAOZZ	5306-00-225-9107	96906	MS90726-52	BOLT,MACHINE	2
4	PAOZZ	5310-00-407-9566	96906	MS35338-45	WASHER,LOCK	4
5	PAOZZ	5310-00-167-0820	80205	NAS1149F0563P	WASHER,FLAT	4
6	PBOOO	2910-00-808-2470	19207	11602063	FILTER,FLUID (FOR COMPONENT PARTS SEE GROUP 0309: FUEL FILTERS PRIMARY AND WATER SEPARATOR FUEL FILTER ASSEMBLIES)	1
7	PAHZZ	5305-00-709-8539	96906	MS90727-89	SCREW,CAP,HEXAGON H	5
8	PAHZZ	5310-01-391-7138	80205	NAS1149F0763P	WASHER,FLAT	3
9	PAHHH	4330-00-134-4734	19207	10951434	BRACKET,FILTER MOUN	1
10	XAHZZ		19207	10951434-1	.BRACKET	1
11	PAHZZ	5325-01-073-2809	96906	MS21209F5-15	.INSERT,SCREW THREAD	4
12	PAOZZ	2910-01-022-6967	19207	11684260	FILTER ELEMENT,FLUI	1
13	PAOZZ	5975-00-074-2072	81343	MS3367-1-9	STRAP,TIEDOWN,ELECT	1
14	PAOZZ	4720-01-053-2019	96906	MS8005E160E270	HOSE ASSEMBLY,NONME	1
15	PAOZZ	5340-00-964-5267	96906	MS21333-120	CLAMP,LOOP	1
16	PAOZZ		81343	4-2076035A	ADAPTER,STRAIGHT,PI	1
17	PAOZZ	5310-00-959-1488	96906	MS51922-21	NUT,SELF-LOCKING,HE	1
18	PBOZZ	5340-00-427-0584	19207	11684126	BRACKET,ANGLE	1
19	PAOZZ	5310-00-209-0965	96906	MS35338-47	WASHER,LOCK	4
20	PAOZZ	4730-00-466-7467	96906	MS51860-53	LOCKNUT,TUBE FITTIN	2
21	PAOZZ	4820-00-684-0880	96906	MS35782-1	COCK,DRAIN	1
22	PAOZZ	4730-00-466-7465	19207	11668629	TEE,PIPE TO TUBE	1
23	PAOZZ	4720-01-031-0519	96906	MS8005E100C	HOSE ASSEMBLY,NONME	1
24	PAOZZ	4730-00-679-9280	96906	MS51520B4	NIPPLE,TUBE	1
25	PAOZZ	4720-01-053-2018	96906	MS8005E230F135	HOSE ASSEMBLY,NONME	1
26	PAOZZ	5340-00-057-3034	96906	MS21333-110	CLAMP,LOOP	2
27	PBOOO	2910-01-037-4741	19207	12254221	FILTER,FLUID (FOR COMPONENT PARTS SEE GROUP 0309: FUEL FILTERS PRIMARY AND WATER SEPARATOR FUEL FILTER ASSEMBLIES)	1
28	PAOZZ	2910-01-017-1482	19207	11684261	FILTER,FLUID	1
29	PAOZZ	5310-00-982-4912	96906	MS21045-5	NUT,SELF-LOCKING,HE	2
30	PAOZZ	4330-00-410-1165	19207	11684010	BRACKET,FILTER MOUN UOC:2CA,2DA	1
30	PAOZZ	5342-01-023-7838	19207	11684295	BRACKET,MOUNTING,FI UOC:EFR	1
31	PAOZZ	5305-00-225-9091	96906	MS90726-36	SCREW,CAP,HEXAGON H	2
32	PAOOO	2910-01-445-8097	58536	A52472-1	FILTER ELEMENT,FLUI	1
33	XAOZZ		90005	1742568	.HEAD,FILTER	1
34	PAOZZ	5331-00-265-1089	81343	AS29513-125	.O-RING	1
35	PAOZZ	1650-01-378-7277	90005	1743117	.FILTER ELEMENT,FLUI	1
36	XAOZZ		90005	26413-01	.BOWL, SEDIMENT	1
37	PBOZZ	5340-00-410-1151	19207	11684128	BRACKET,MOUNTING	1
38	PAOOO	2910-00-025-3493	96906	MS51085-1	FILTER,FLUID	1
39	XAOZZ		19207	7416621	.HEAD,FILTER	1
40	PAOZZ	2910-00-203-3322	90005	569807-02	.FILTER ELEMENT,FLUI	1
41	XAOZZ		81343	AS29513-125	.O-RING PART OF KIT P/N 5704488	1
42	PAOZZ	2910-00-031-9083	90005	26413	.BOWL,SEDIMENT	1
43	PAOZZ	5305-00-655-6556	96906	MS35266-70	SCREW,MACHINE	2
44	PAOZZ	5310-00-045-3296	80205	MS35338-43	WASHER,LOCK	2
45	PAOZZ	5310-00-167-0818	80205	NAS1149F0363P	WASHER,FLAT	8
46	PBOZZ	5342-00-398-7102	19207	11684019	BRACKET,ENGINE ACCE	1
47	PAOZZ	5310-00-514-6674	96906	MS35335-34	WASHER,LOCK	20
48	PAOZZ	5306-00-225-9088	96906	MS90726-33	BOLT,MACHINE	4
49	PAOZZ	4720-01-036-7474	96906	MS8005E140A	HOSE ASSEMBLY,NONME	1

(1) ITEM NO.	(2) SMR CODE	(3) NSN	(4) CAGEC	(5) PART NUMBER	(6) DESCRIPTION AND USABLE ON CODES(UOC)	(7) QTY
50	PAOZZ	4730-00-837-7073	96906	MS51500A4-4S	ADAPTER,STRAIGHT,PI	1
51	PAOZZ	6150-00-423-3850	19207	11684127	WIRING HARNESS	1
52	PAOZZ	4810-00-487-2775	81978	V5S55680	VALVE,SOLENOID	1
53	PAOZZ	5306-00-042-5828	21450	425828	BOLT,ASSEMBLED WASH	6
54	PAOZZ	4730-00-231-4010	96906	MS20822-4-4	ELBOW,PIPE TO TUBE	1
55	PAOZZ	4330-00-410-1212	19207	11668625	SEPARATOR,WATER,LIQ	1
56	PAOZZ	4710-00-410-1222	19207	11684022	TUBE ASSEMBLY,METAL	1

END OF FIGURE

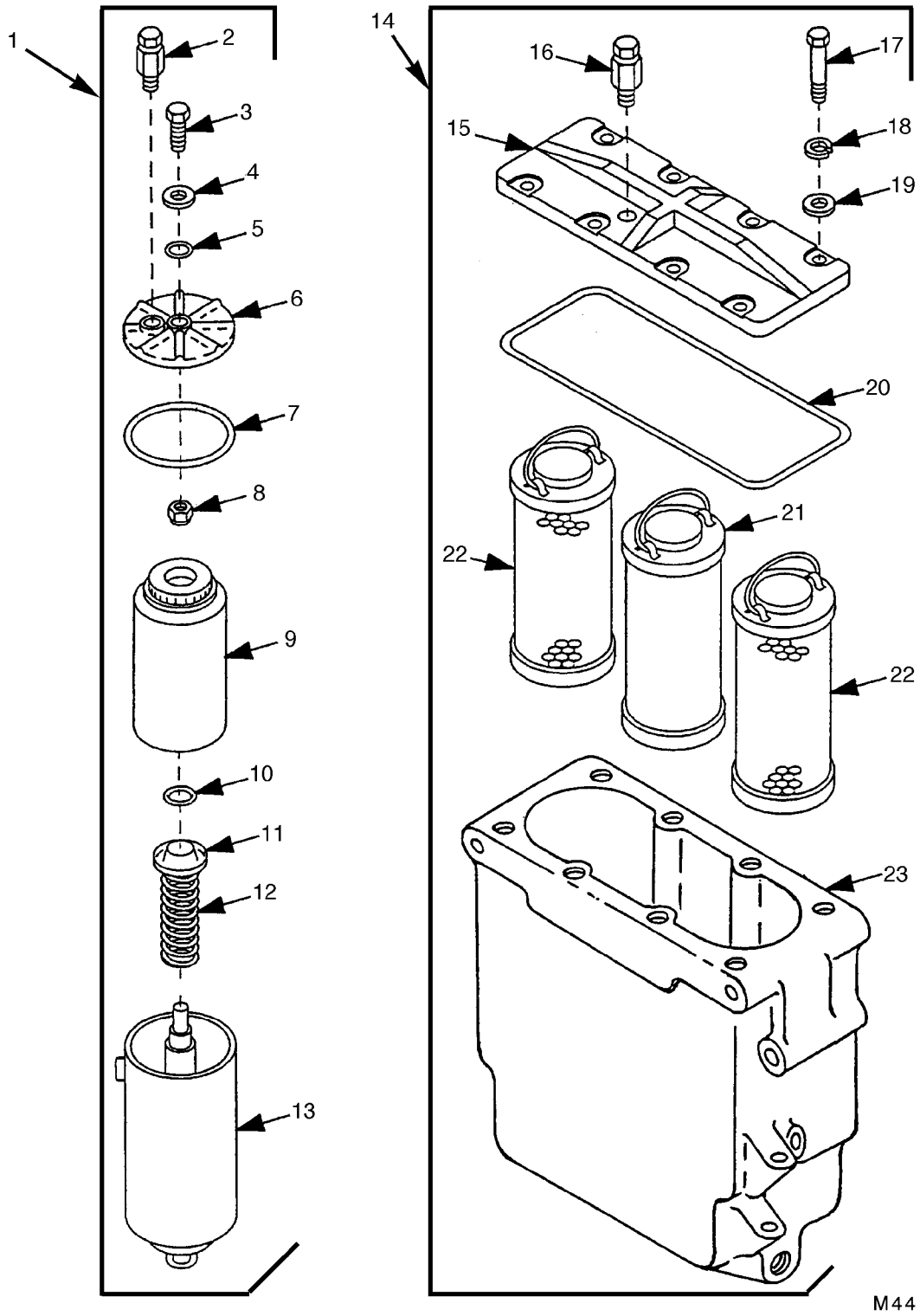

FIGURE 46. PRIMARY AND WATER SEPARATOR FUEL FILTER ASSEMBLIES

(1) ITEM NO.	(2) SMR CODE	(3) NSN	(4) CAGEC	(5) PART NUMBER	(6) DESCRIPTION AND USABLE ON CODES(UOC)	(7) QTY
					GROUP 0309: FUEL FILTERS	
					FIG.46 PRIMARY AND WATER SEPARATOR FUEL FILTER ASSEMBLIES	
1	PBOOO	2910-01-037-4741	19207	12254221	FILTER,FLUID	1
2	PAOZZ	5340-01-053-4866	19207	12254231	.PLUG,VENT	1
3	PAOZZ	5305-00-821-3869	80204	B1821BH038C175N	.SCREW,CAP,HEXAGON H	1
4	PAOZZ	5310-00-080-6004	96906	MS27183-14	.WASHER,FLAT PART OF KIT P/N 5704487	1
5	KFOZZ		19207	11641857	.GASKET PART OF KIT P/N 5704487	1
6	XAOZZ		19207	11641745	.HEAD,FUEL FILTER	1
7	KFOZZ		19207	11641744	.GASKET PART OF KIT P/N 5704487	1
8	PAOZZ	5310-00-087-4652	81349	M45913/1-6CG5C	.NUT,SELF-LOCKING,HE	1
9	PAOZZ	4330-01-161-5339	90005	CF8EID	.FILTER ELEMENT,FLUI PART OF KIT P/N 5704487	1
10	PCOZZ	5331-00-248-3850	81343	AS29513-116	.O-RING PART OF KIT P/N 5704487	1
11	XAOZZ		19207	11641868	.RETAINER	1
12	XAOZZ		19207	11641867	.SPRING,HLCPS	1
13	XAOZZ		19207	11641746	.BODY ASSEMBLY	1
14	PBOOO	2910-00-808-2470	19207	11602063	FILTER,FLUID	1
15	XAOZZ		08181	28M94	.COVER	1
16	PAOZZ	5340-01-053-4866	19207	12254231	.PLUG,VENT	1
17	PAOZZ	5305-00-225-3843	80204	B1821BH025C100N	.SCREW,CAP,HEXAGON H	8
18	PAOZZ	5310-00-582-5965	80205	MS35338-44	.WASHER,LOCK	8
19	PAOZZ	5310-00-809-4058	96906	MS27183-10	.WASHER,FLAT	8
20	PAOZZ	5331-01-102-4685	19207	11610232	.O-RING PART OF KIT P/N 5702738	1
21	PAOZZ	2940-00-808-2421	19207	11602061	.FILTER ELEMENT,FLUI	1
22	KFOZZ		19207	11602062	.ELEMENT,FILTER PART OF KIT P/N 5702738	2
23	XAOZZ		08181	28M68	.BODY,FILTER	1

END OF FIGURE

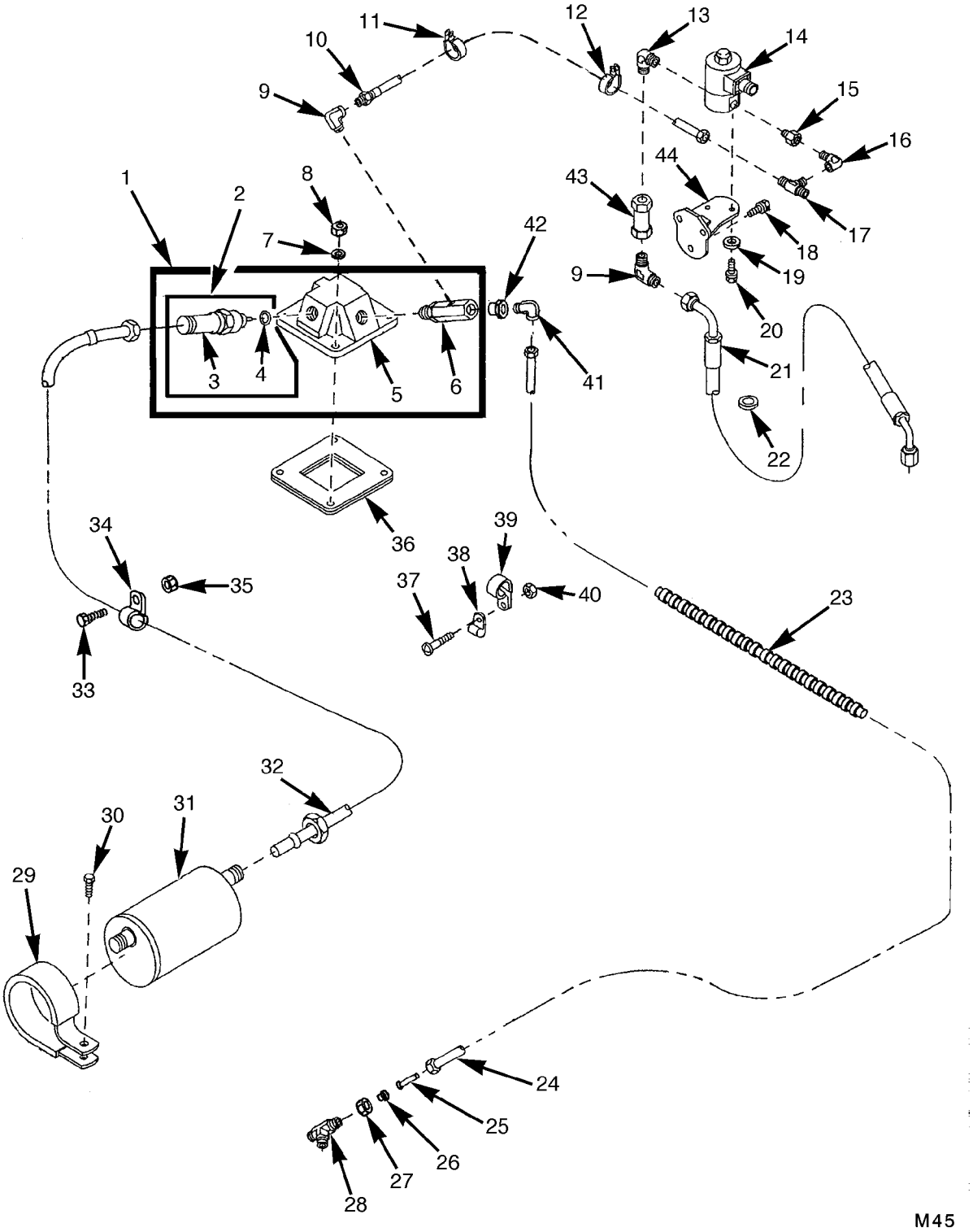

FIGURE 47. MANIFOLD HEATER ASSEMBLY
(LEFT BANK)

GROUP 0311: ENGINE STARTING AIDS

FIG.47 MANIFOLD HEATER ASSEMBLY (LEFT BANK)

(1) ITEM NO.	(2) SMR CODE	(3) NSN	(4) CAGEC	(5) PART NUMBER	(6) DESCRIPTION AND USABLE ON CODES(UOC)	(7) QTY
1	PBOOF	2815-00-117-9337	59501	10-187565-1	HEATER ASSEMBLY	1
2	PAOOO	2920-00-711-5829	OB231	ED89D	.SPARK PLUG	1
3	XAOZZ		19207	7335556-1	..SPARKPLUG	1
4	PAOZZ	5310-00-982-6539	96906	MS35910-1	..WASHER,FLAT PART OF KIT P/N 5704488	1
5	XAOZZ		19207	11642092-1	.HOUSING	1
6	PAOZZ	2910-01-041-3370	19207	12254278	.NOZZEL ASSEMBLY,FLA	1
7	PAOZZ	5310-00-081-4219	96906	MS27183-12	WASHER,FLAT	4
8	PAOZZ	5310-00-088-0553	96906	MS21044N5	NUT,SELF-LOCKING,HE	4
9	PAOZZ	4730-00-647-3207	96906	MS51504A4	ELBOW,PIPE TO TUBE	2
10	PAOZZ	4710-00-399-5304	19207	11684024	TUBE ASSEMBLY,METAL	1
11	PAOZZ	5340-00-809-1490	96906	MS21333-98	CLAMP,LOOP	1
12	PAOZZ	5340-00-067-3868	96906	MS21333-109	CLAMP,LOOP	1
13	PAOZZ	4730-01-026-1848	19207	10921622-2	ELBOW,PIPE	1
14	PAOZZ	4820-01-512-9998	19207	7062194-1	BODY,VALVE	1
15	PAOZZ	4730-00-930-7776	81343	2-2 130139C	COUPLING,PIPE	1
16	PAOZZ	4730-00-725-3664	21450	454108	ELBOW,PIPE	1
17	PAOZZ	4730-00-522-1909	19207	7767518	TEE,PIPE TO TUBE	1
18	PAOZZ	5306-00-741-4584	19207	7414584	BOLT,ASSEMBLED WASH	3
19	PAOZZ	5310-00-167-0818	80205	NAS1149F0363P	WASHER,FLAT	2
20	PAOZZ	5306-00-042-5828	21450	425828	BOLT,ASSEMBLED WASH	2
21	PAOZZ	4720-01-030-1057	96906	MS8005E086E180	HOSE ASSEMBLY,NONME	1
22	PAOZZ	5325-01-492-8991	96906	MS35489-97S	GROMMET,NONMETALLIC	1
23	PBOZZ	5970-01-511-4359	19207	12468928	INSULATION SLEEVING	V
24	MOOZZ		19207	7017826-15	TUBING,NONMETALLIC (MAKE FROM TUBING,NONMETALLIC P/N TD2-03420)	V
25	PAOZZ	4730-01-045-1120	19207	11642119-1	INSERT,TUBE FITTING	2
26	PAOZZ	4730-00-239-2503	96906	MS51825-1A	SLEEVE,CLINCH,TUBE	2
27	PAOZZ	4730-00-038-7015	96906	MS51823-3	NUT,TUBE COUPLING	2
28	PAOZZ		96906	MS51818-3	TEE,PIPE TO TUBE	1
29	PAOZZ	5340-00-114-0093	19207	10865374	CLAMP,LOOP	2
30	PAOZZ	5305-01-407-9487	80204	B1821BH031F088N	SCREW,CAP,HEXAGON H	2
31	PAOZZ		19207	7060198	IGNITION UNIT,MANIF	1
32	PAOZZ	6150-00-410-1975	19207	7062196-1	LEAD AND CONDUIT AS	1
33	PAOZZ	5305-00-068-0512	80204	B1821BH025F056N	SCREW,CAP,HEXAGON H	1
34	PAOZZ	5340-00-984-8540	96906	MS21333-102	CLAMP,LOOP	1
35	PAOZZ	5310-00-061-7325	96906	MS21045-4	NUT,SELF-LOCKING,HE	1
36	PAOZZ	5330-00-678-4695	19207	8682503	GASKET PART OF KIT P/N 5704488	1
37	PAOZZ	5305-00-993-1851	96906	MS35207-267	SCREW,MACHINE	5
38	PAOZZ	5340-00-079-7837	96906	MS21333-67	CLAMP,LOOP	5
39	PAOZZ	5340-00-922-6300	96906	MS21333-77	CLAMP,LOOP	5
40	PAOZZ	5310-00-877-5797	80205	MS21044N3	NUT,SELF-LOCKING,HE	5
41	PAOZZ	4730-00-854-5837	96906	MS51815-1	ELBOW,PIPE	1
42	PAOZZ	4730-01-152-5621	96906	MS14315-1X	BUSHING,PIPE	1
43	PAOZZ	4820-00-467-2578	19207	11684097	VALVE,CHECK	1
44	PBOZZ	5945-00-423-3869	19207	11684101	BRACKET,SOLENOID	1

END OF FIGURE

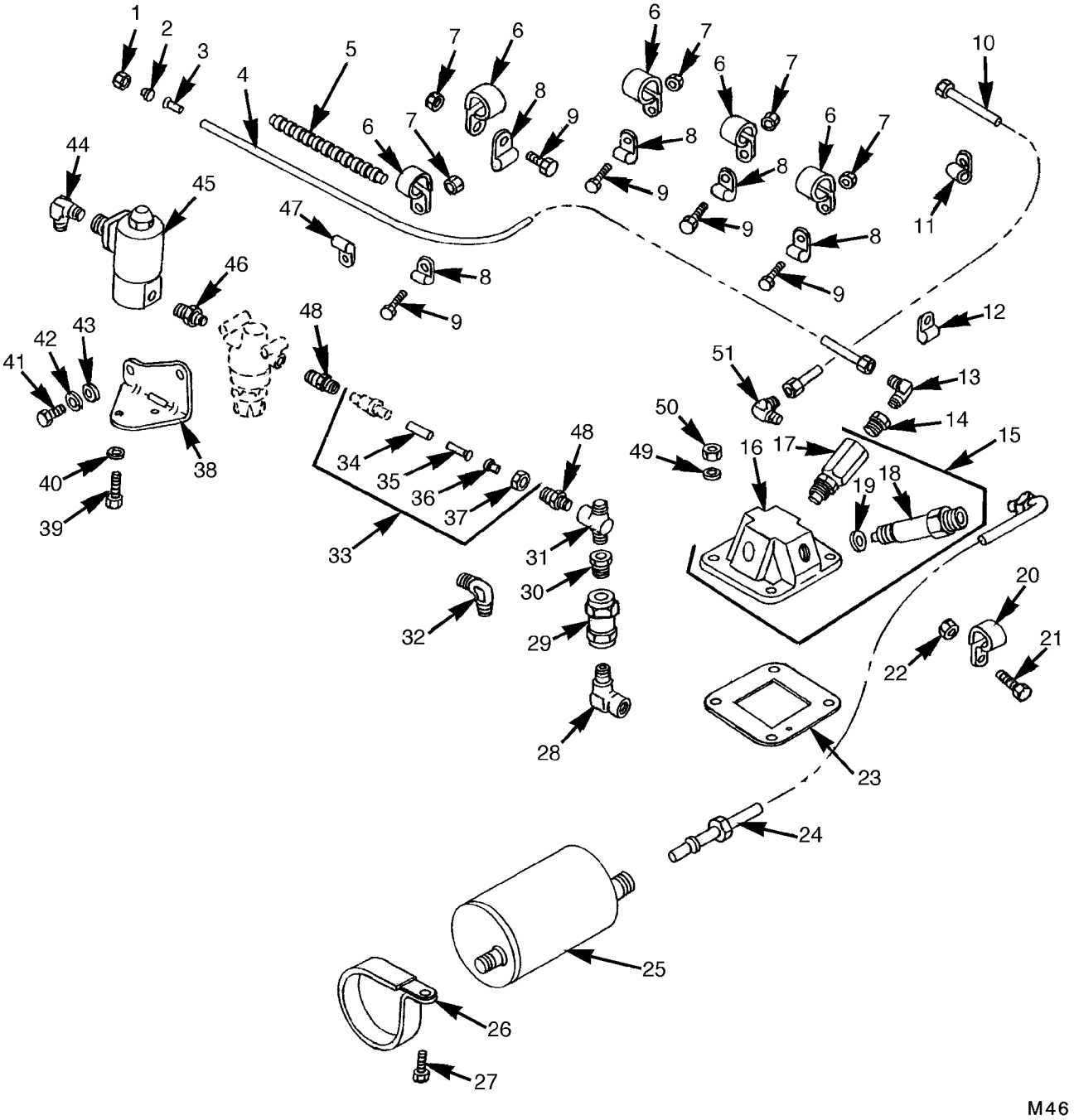

FIGURE 48. MANIFOLD HEATER ASSEMBLY (RIGHT BANK)

(1) ITEM NO.	(2) SMR CODE	(3) NSN	(4) CAGEC	(5) PART NUMBER	(6) DESCRIPTION AND USABLE ON CODES(UOC)	(7) QTY
					GROUP 0311: ENGINE STARTING AIDS	
					FIG.48 MANIFOLD HEATER ASSEMBLY (RIGHT BANK)	
1	PAOZZ	4730-00-038-7015	96906	MS51823-3	NUT,TUBE COUPLING	2
2	PAOZZ	4730-00-239-2503	96906	MS51825-1A	SLEEVE,CLINCH,TUBE	2
3	PAOZZ	4730-01-047-2605	19207	11682596-1	INSERT,TUBE FITTING	2
4	MOOZZ		19207	7017826-19	TUBING,NONMETALLIC (MAKE FROM TUBING,NONMETALLIC P/N TD2-03420)	V
5	PBOZZ	5970-01-511-4359	19207	12468928	INSULATION SLEEVING	1
6	PAOZZ	5340-00-922-6300	96906	MS21333-77	CLAMP,LOOP	5
7	PAOZZ	5310-00-877-5797	80205	MS21044N3	NUT,SELF-LOCKING,HE	5
8	PAOZZ	5340-00-079-7837	96906	MS21333-67	CLAMP,LOOP	5
9	PAOZZ	5305-00-993-1851	96906	MS35207-267	SCREW,MACHINE UOC:2CA,2DA	5
10	PAOZZ	4710-00-410-1218	19207	11682581	TUBE ASSEMBLY,METAL UOC:EFR	1
10	PAOZZ	4710-01-012-6712	19207	11684213	TUBE ASSEMBLY,METAL	1
11	PAOZZ	5340-00-067-3868	96906	MS21333-109	CLAMP,LOOP	1
12	PAOZZ	5340-00-809-1490	96906	MS21333-98	CLAMP,LOOP	1
13	PAOZZ	4730-00-096-8756	96906	MS51815-3	ELBOW,PIPE TO TUBE	1
14	PAOZZ	4730-01-152-5621	96906	MS14315-1X	BUSHING,PIPE	1
15	PAOOO	2990-00-369-8766	59501	10-187565-2	HEATER,COOLANT,ENGI	1
16	XAOZZ		19207	11642092-2	.HOUSING	1
17	PAOZZ	2910-01-041-3370	19207	12254278	.NOZZEL ASSEMBLY,FLA	1
18	PAOZZ		19207	7335556-1	.SPARKPLUG	1
19	PAOZZ	5310-00-982-6539	96906	MS35910-1	.WASHER,FLAT PART OF KIT P/N 5704488	1
20	PAOZZ	5340-00-984-8540	96906	MS21333-102	CLAMP,LOOP	1
21	PAOZZ	5305-00-068-0512	80204	B1821BH025F056N	SCREW,CAP,HEXAGON H	1
22	PAOZZ	5310-00-061-7325	96906	MS21045-4	NUT,SELF-LOCKING,HE	1
23	PAOZZ	5330-00-678-4695	19207	8682503	GASKET PART OF KIT P/N 5704488	1
24	PAOZZ	6150-00-410-1975	19207	7062196-1	LEAD AND CONDUIT AS	1
25	PAOZZ	2920-00-770-1641	50148	305001	IGNITION UNIT,MANIF	1
26	PAOZZ	5340-00-114-0093	19207	10865374	CLAMP,LOOP	2
27	PAOZZ	5305-01-407-9487	80204	B1821BH031F088N	SCREW,CAP,HEXAGON H	2
28	PAOZZ	4730-00-035-8036	19207	8365771	ELBOW,PIPE	1
29	PAOZZ	2910-01-011-9105	19207	11684096	FILTER,FLUID	1
30	PAOZZ	4730-00-430-3165	34623	A1265	BUSHING,PIPE	1
31	PAOZZ	4730-00-805-0676	19207	10865466	TEE,PIPE	1
32	PAOZZ	4730-00-096-8756	96906	MS51815-3	ELBOW,PIPE TO TUBE	1
33	AOOOO		19207	10865122	TUBE ASSEMBLY UOC:EFR	1
33	AOOOO		19207	10882777	TUBE ASSEMBLY UOC:2CA,2DA	1
34	PAOZZ	4710-00-805-4149	19207	7017826	.TUBING,NONMETALLIC	V
35	PAOZZ	4730-01-045-1120	19207	11642119-1	.INSERT,TUBE FITTING	2
36	PAOZZ	4730-00-004-4265	96906	MS51825-3A	.SLEEVE,CLINCH,TUBE	2
37	PAOZZ	4730-00-038-7015	96906	MS51823-3	.NUT,TUBE COUPLING	2
38	PBOZZ	5340-00-447-3661	19207	11684100	BRACKET,ANGLE	1
39	PAOZZ	5306-00-042-5828	21450	425828	BOLT,ASSEMBLED WASH	2
40	PAOZZ	5310-00-167-0818	80205	NAS1149F0363P	WASHER,FLAT UOC:2CA,2DA	2
41	PAOZZ	5305-00-267-8952	80204	B1821BH025F050N	SCREW,CAP,HEXAGON H	2
42	PAOZZ	5310-00-209-0786	96906	MS35335-33	WASHER,LOCK UOC:EFR	2
43	PAOZZ	5310-00-194-0637	96906	MS9320-10	WASHER,FLAT UOC:2CA,2DA	2
44	PAOZZ	4730-00-725-3664	21450	454108	ELBOW,PIPE UOC:EFR	1
45	PAOZA	4820-01-513-0000	19207	7062194-2	BODY,VALVE	1
46	PAOZZ	4730-01-055-4021	79470	C3069X2	NIPPLE,PIPE	1
47	PAOZZ	5340-00-964-5267	96906	MS21333-120	CLAMP,LOOP	1

(1) ITEM NO.	(2) SMR CODE	(3) NSN	(4) CAGEC	(5) PART NUMBER	(6) DESCRIPTION AND USABLE ON CODES(UOC)	(7) QTY
48	PAOZZ	5305-00-227-1543	96906	MS51849-33	SCREW,MACHINE	2
49	PAOZZ	5310-00-081-4219	96906	MS27183-12	WASHER,FLAT	4
50	PAOZZ	5310-00-088-0553	96906	MS21044N5	NUT,SELF-LOCKING,HE	4
51	PAOZZ	4730-00-647-3207	96906	MS51504A4	ELBOW,PIPE TO TUBE	1

END OF FIGURE

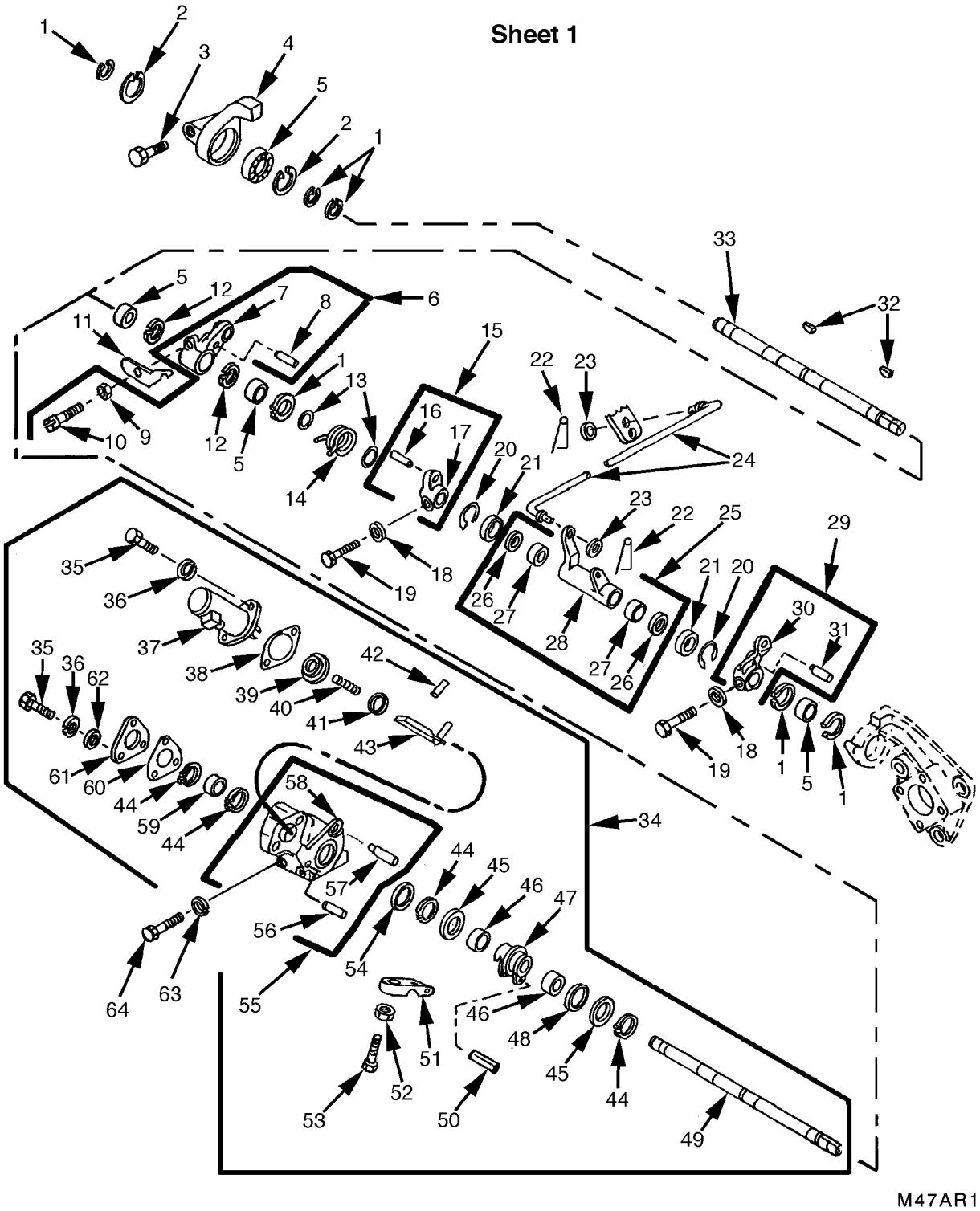

FIGURE 49. THROTTLE LINKAGE, SOLENOID CONTROL ASSEMBLY, AND MANUAL SHUT-OFF (SHEET 1 OF 2)

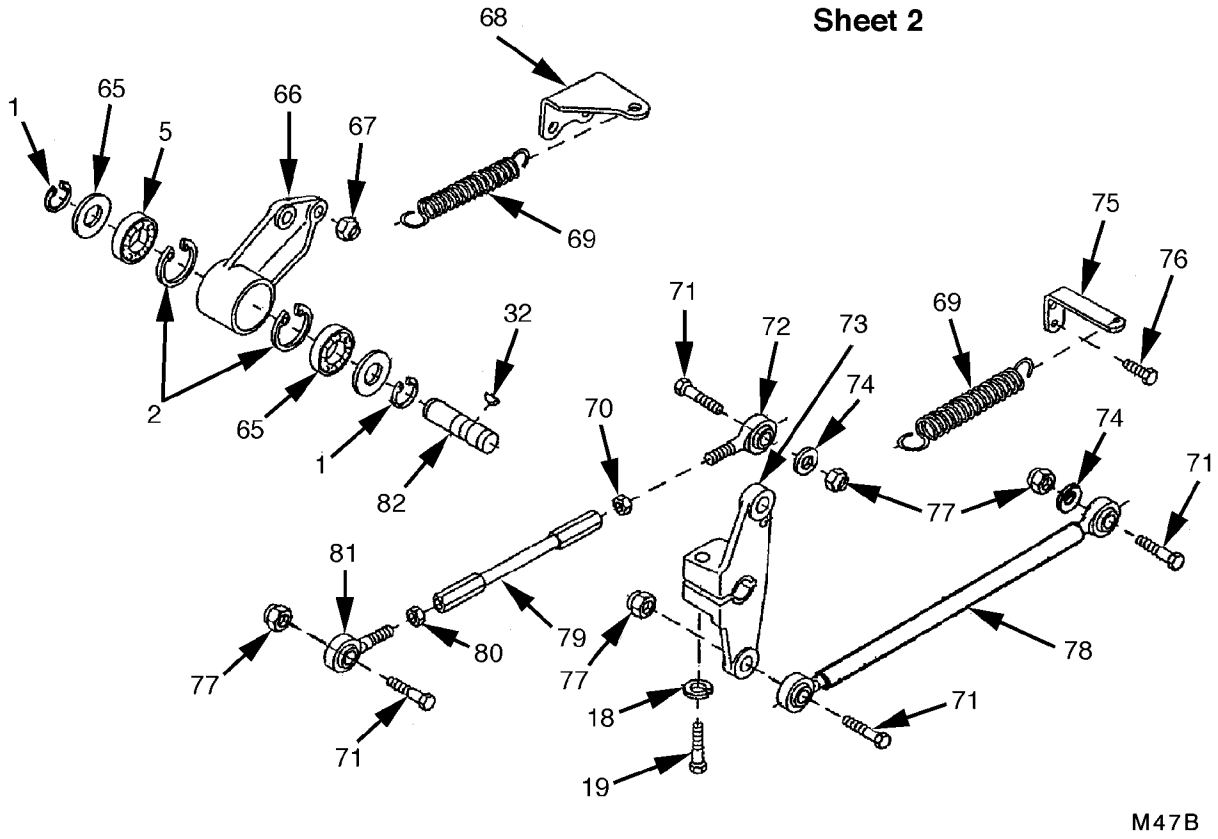

FIGURE 49. THROTTLE LINKAGE, SOLENOID CONTROL ASSEMBLY, AND MANUAL SHUT-OFF (SHEET 2 OF 2)

(1) ITEM NO.	(2) SMR CODE	(3) NSN	(4) CAGEC	(5) PART NUMBER	(6) DESCRIPTION AND USABLE ON CODES(UOC)	(7) QTY
					GROUP 0312: ACCELERATOR,THROTTLE OR CHOKE CONTROLS	
					FIG.49 THROTTLE LINKAGE, SOLENOID CONTROL ASSEMBLY, AND MANUAL SHUT-OFF	
1	PAFZZ	5325-00-803-7305	96906	MS16624-1062	RING,RETAINING	8
2	PAFZZ	5365-00-754-1083	96906	MS16625-1137	RING,RETAINING	6
3	PAFZZ	5305-00-042-5592	24617	425592	SCREW,ASSEMBLED WAS UOC:2CA,2DA	2
4	PBFZZ	3040-00-410-1182	19207	11684020	BRACKET,EYE,ROTATIN UOC:2CA,2DA	1
5	PBFZZ	3110-00-227-3620	19207	8393931	BEARING,BALL,ANNULA	8
6	XAFFF		19207	10865324	LEVER,REMOTE CONTRO	1
7	XAFZZ		19207	10865322	.LEVER,CONTROL	1
8	PAFZZ	5315-00-828-4485	96906	MS16555-655	.PIN,STRAIGHT,HEADLE	1
9	PAFZZ	5310-00-891-1752	96906	MS35691-14	.NUT,PLAIN,HEXAGON	3
10	PAFZZ	5305-00-891-7871	19207	10865321	.SCREW,MACHINE	1
11	PAFZZ	5340-00-596-4020	19207	10935400	BRACKET,ANGLE UOC:EFR	1
12	PAFZZ	5365-00-754-1083	96906	MS16625-1137	RING,RETAINING	2
13	PAFZZ	5310-00-115-1440	10001	2220036	WASHER,FLAT	2
14	PAFZZ	5360-01-274-3562	19207	12314650	SPRING,HELICAL,TORS	1
15	PBFFF	3040-00-193-8213	19207	8682676	LEVER,REMOTE CONTRO	1
16	PAFZZ	5315-00-828-4485	96906	MS16555-655	.PIN,STRAIGHT,HEADLE	2
17	XAFZZ		19207	8682709	.LEVER,CONTROL	1
18	PAFZZ	5310-00-407-9566	96906	MS35338-45	WASHER,LOCK	4
19	PAFZZ	5305-00-051-4076	80204	B1821BH031F100N	SCREW,CAP,HEXAGON H	3
20	PAFZZ	5325-00-842-2613	96906	MS16633-1062	RING,RETAINING	2
21	PAFZZ	5310-01-423-7133	80205	NAS1149C1032R	WASHER,FLAT	2
22	PAFZZ	5315-00-223-6113	58536	AA55488-1	PIN,RETAINING SAFET	2
23	PAFZZ	5310-00-945-0528	96906	MS9321-11	WASHER,FLAT	2
24	PBFZZ	3040-01-018-3701	19207	11684131	CONNECTING LINK,RIG	1
25	PBFFF	3040-00-399-5305	19207	11684028	LEVER,REMOTE CONTRO	1
26	PAFZZ	5330-00-486-0372	76680	7399-5	.SEAL,PLAIN	2
27	PAFZZ	3120-00-846-2012	96906	MS17795-104	.BEARING,SLEEVE	2
28	XAFZZ		19207	11684021	.LEVER,CONTROL	1
29	PBFFF	3040-00-932-5001	19207	8682677	LEVER,REMOTE CONTRO	1
30	XAFZZ		19207	8682708	.LEVER,CONTROL	1
31	PAFZZ	5315-00-828-4485	96906	MS16555-655	.PIN,STRAIGHT,HEADLE	1
32	PAFZZ	5315-00-616-5526	80205	MS35756-8	KEY,WOODRUFF	3
33	PBFZZ	3040-00-410-1234	19207	11684023	SHAFT,STRAIGHT UOC:2CA,2DA	1
34	PAFFF	5945-01-268-3577	19207	12314657	SOLENOID,ELECTRICAL UOC:EFR	1
35	PAFZZ	5306-00-068-0513	18876	PMS90727001-06	.BOLT,MACHINE UOC:EFR	5
36	PAFZZ	5310-00-582-5965	80205	MS35338-44	.WASHER,LOCK UOC:EFR	5
37	PAFZZ	5945-01-016-0875	19207	11668259	.SOLENOID,ELECTRICAL UOC:EFR	1
38	PAFZZ	5330-01-031-6954	19207	10935368	.GASKET PART OF KIT P/N 5704488 UOC:EFR	1
39	PAFZZ	5340-01-282-8165	19207	12314648	.RETAINER,HELICAL CO UOC:EFR	1
40	PAFZZ	5360-01-011-0732	19207	11682601	.SPRING,HELICAL,COMP UOC:EFR	1
41	PAFZZ	5340-01-046-6826	19207	11682606	.RETAINER,HELICAL CO UOC:EFR	1
42	PAFZZ	5315-01-135-0181	96906	MS171592	.PIN,SPRING UOC:EFR	1
43	PAFZZ	3040-01-270-5934	7B096	12314656	.CONNECTING LINK,RIG RIGHT UOC:EFR	1

(1) ITEM NO.	(2) SMR CODE	(3) NSN	(4) CAGEC	(5) PART NUMBER	(6) DESCRIPTION AND USABLE ON CODES(UOC)	(7) QTY
44	PAFZZ	5325-00-803-7305	96906	MS16624-1062	.RING,RETAINING. . . . . UOC:EFR	4
45	PAFZZ	5310-00-115-1440	10001	2220036	.WASHER,FLAT. . . . . UOC:EFR	2
46	PAFZZ	3110-00-198-1085	96906	MS17131-18	.BEARING,ROLLER,NEED . . . . . UOC:EFR	2
47	XAFZZ		19207	12314647	.HOUSING,SOLENOID IN . . . . . UOC:EFR	1
48	PAFZZ	5330-00-286-9942	73680	26031-7020	.SEAL,PLAIN ENCASED PART OF KIT P/N 5704488 . . . . . UOC:EFR	1
49	PAFZZ	3040-01-027-0761	19207	12254205	.SHAFT,STRAIGHT . . . . . UOC:EFR	1
50	PAFZZ	5315-00-934-0285	81343	MS9390-320	.PIN,STRAIGHT,HEADLE . . . . . UOC:EFR	1
51	PBFZZ	3040-01-270-5933	19207	12314649	.CONNECTING LINK,RIG RIGHT . . . . . UOC:EFR	1
52	PAFZZ	5310-00-891-1752	96906	MS35691-14	.NUT,PLAIN,HEXAGON . . . . . UOC:EFR	1
53	PAFZZ	5305-01-013-1424	96906	MS51849-108	.SCREW,MACHINE . . . . . UOC:EFR	1
54	PAFZZ	5330-01-511-5567	19207	10935398	.SEAL,PLAIN ENCASED PART OF KIT P/N 5704488 . . . . . UOC:EFR	1
55	XAFFF		19207	12254202	.HOUSING ASSEMBLY,SO . . . . . UOC:EFR	1
56	PAFZZ	5315-00-682-1746	96906	MS16555-653	..PIN,STRAIGHT,HEADLE . . . . . UOC:EFR	1
57	PAFZZ	5315-00-586-6076	19207	10935386	..PIN,SHOULDER,HEADLE . . . . . UOC:EFR	1
58	XAFZZ		19207	12254203	..HOUSING,SOLENOID CO . . . . . UOC:EFR	1
59	PAFZZ	3110-00-227-3620	19207	8393931	.BEARING,BALL,ANNULA . . . . . UOC:EFR	1
60	PAFZZ	5330-00-586-6071	19207	10935397	.GASKET PART OF KIT P/N 5704488. . . . . UOC:EFR	1
61	PAFZZ	5340-00-564-9676	19207	10935396	.COVER,ACCESS . . . . . UOC:EFR	1
62	PAFZZ	5310-00-141-1795	88044	AN960-416	.WASHER,FLAT. . . . . UOC:EFR	3
63	PAFZZ	5310-00-407-9566	96906	MS35338-45	WASHER,LOCK. . . . . UOC:EFR	4
64	PAFZZ	5306-00-225-9100	96906	MS90726-45	BOLT,MACHINE . . . . . UOC:EFR	2
65	PBFZZ	3110-01-013-9708	19207	11682767	SHIELD,BEARING,REPL	2
66	PBFZZ	3040-00-402-4429	19207	8761016	BRACKET,EYE,ROTATIN.	1
67	PAFZZ	5310-00-088-0553	80205	MS21044N5	NUT,SELF-LOCKING,HE	3
68	PBFZZ	5340-00-466-7850	19207	11682658	BRACKET,ANGLE.	1
69	PAFZZ	5360-01-047-9364	19207	12254331	SPRING,HELICAL,EXTE.	2
70	PAFZZ	5310-00-891-1752	96906	MS35691-14	NUT,PLAIN,HEXAGON	1
71	PAFZZ	5305-00-225-9091	96906	MS90726-36	SCREW,CAP,HEXAGON H	4
72	PAFZZ	3120-01-022-2044	73134	HMJL5CTPB	BEARING,PLAIN,ROD E	1
73	PBFZZ	3040-00-402-4431	19207	8761018	BELL CRANK.	1
74	PAFZZ	5310-00-167-0820	80205	NAS1149F0563P	WASHER,FLAT	2
75	PBFZZ	5340-00-423-4104	19207	11684032	BRACKET,ANGLE.	1
76	PAFZZ	5305-00-225-3843	80204	B1821BH025C100N	SCREW,CAP,HEXAGON H	2
77	PAFZZ	5310-00-982-4912	96906	MS21045-5	NUT,SELF-LOCKING,HE	4
78	PAFZZ	3040-01-026-0702	19207	11684250	CONNECTING LINK,RIG	1
79	PBFZZ	5342-00-484-0771	19207	8682783	CONTROL ROD	1
80	PAFZZ	5310-00-891-1752	96906	MS35691-14	NUT,PLAIN,HEXAGON.	1
81	PAFZZ	3120-00-529-8347	19207	9686981	BEARING,PLAIN,ROD E	1
82	PBFZZ	3040-01-018-3702	19207	8682786-1	SHAFT,STRAIGHT	1

END OF FIGURE

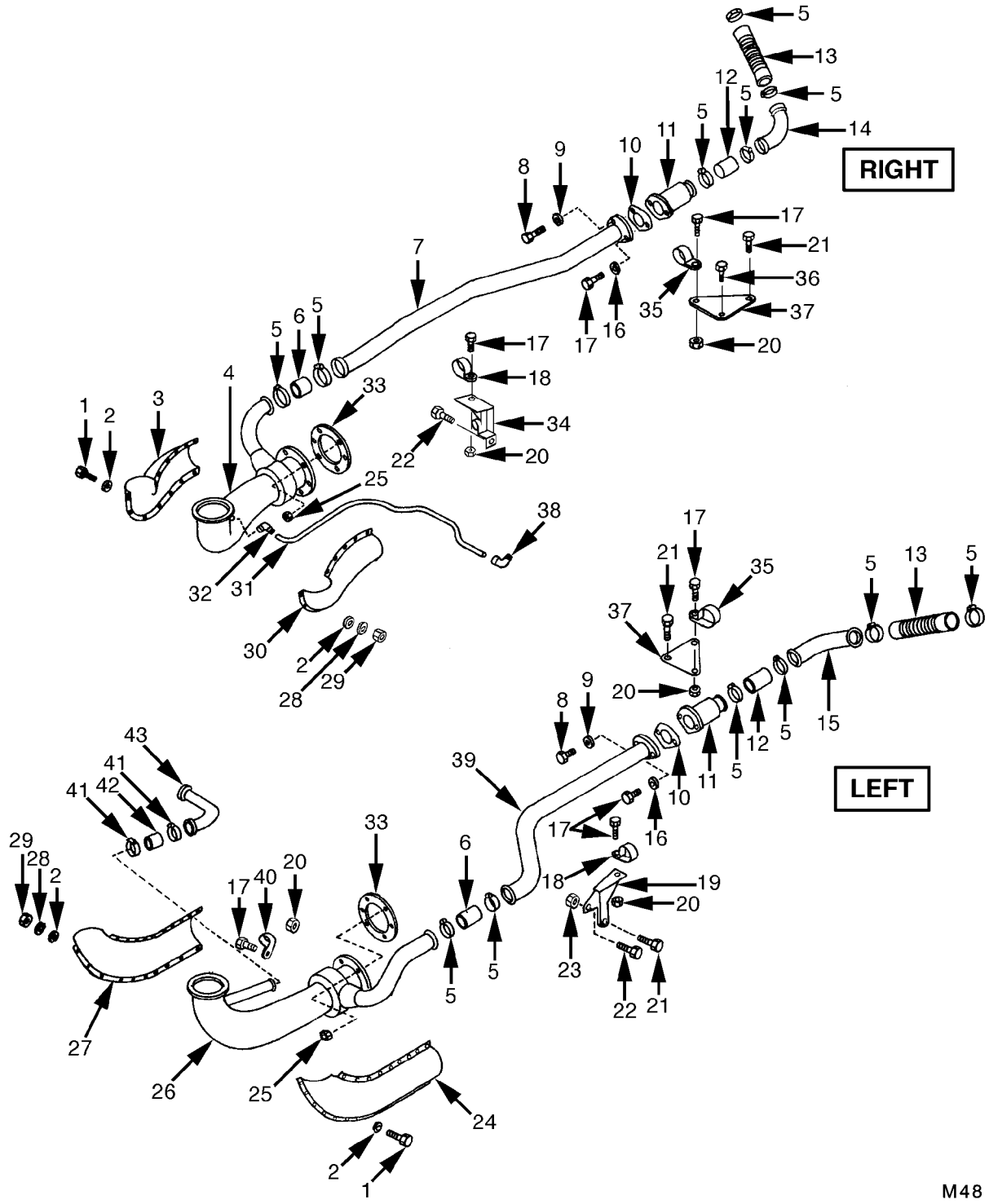

FIGURE 50. DUST EJECTOR SYSTEM (MODELS AVDS-1790-2CA AND AVDS-1790-2DA)

(1) ITEM NO.	(2) SMR CODE	(3) NSN	(4) CAGEC	(5) PART NUMBER	(6) DESCRIPTION AND USABLE ON CODES(UOC)	(7) QTY
					GROUP 04: EXHAUST SYSTEM	
					GROUP 0401: MUFFLER AND PIPES	
					FIG.50 DUST EJECTOR SYSTEM (MODELS AVDS-1790-2CA AND AVDS-1790-2DA)	
1	PAOZZ	5305-00-054-6652	96906	MS51957-28	SCREW,MACHINE UOC:2CA,2DA	22
2	PAOZZ	5310-00-880-5976	80205	MS15795-806	WASHER,FLAT UOC:2CA,2DA	44
3	PAOZZ	5640-01-146-1898	19207	12275889	INSULATION PIPE FIT OUTER,RIGHT UOC:2CA,2DA	1
4	PAOZZ	2990-01-146-1877	02978	699772	PIPE,EXHAUST RIGHT UOC:2CA,2DA	1
5	PAOZZ	4730-00-909-8627	01276	FF9311-36	CLAMP,HOSE UOC:2CA,2DA	12
6	PAOZZ	4720-00-432-1334	70628	712188-11	HOSE,AIR DUCT UOC:2CA,2DA	2
7	PAOZZ	4710-01-146-1901	19207	12314569	TUBE ASSEMBLY,METAL REAR,RIGHT UOC:2CA,2DA	1
8	PAOZZ	5306-00-068-0513	80204	B1821BH025F075N	BOLT,MACHINE UOC:2CA,2DA	2
9	PAOZZ	5310-00-582-5965	80205	MS35338-44	WASHER,LOCK UOC:2CA,2DA	2
10	PAOZZ	5330-01-145-8290	19207	12275824	GASKET PART OF KIT P/N 5704488 UOC:2CA,2DA	2
11	PAOZZ	2990-01-156-6225	19207	12275844	CAP ASSEMBLY,PROTEC UOC:2CA,2DA	2
12	PAOZZ	4720-01-146-1887	19207	12275883	HOSE,NONMETALLIC UOC:2CA,2DA	2
13	PAOZZ	4720-01-146-1888	19207	12314574	HOSE,NONMETALLIC UOC:2CA,2DA	2
14	PAOZZ	4710-01-146-1910	19207	12314568	TUBE,BENT,METALLIC FRONT,RIGHT UOC:2CA,2DA	1
15	PFOZZ	4710-01-146-1909	19207	12314564	TUBE,BENT,METALLIC FRONT,LEFT UOC:2CA,2DA	1
16	PAOZZ	5310-00-407-9566	96906	MS35338-45	WASHER,LOCK UOC:2CA,2DA	2
17	PAOZZ	5306-00-050-1238	80204	B1821BH031F075N	BOLT,MACHINE UOC:2CA,2DA	7
18	PAOZZ	5340-01-145-8303	19207	12275861	CLAMP,LOOP UOC:2CA,2DA	2
19	PAOZZ	5340-01-146-1895	19207	12314561	BRACKET,MOUNTING LEFT UOC:2CA,2DA	1
20	PAOZZ	5310-00-982-4912	96906	MS21045-5	NUT,SELF-LOCKING,HE UOC:2CA,2DA	5
21	PAOZZ	5305-00-042-5640	24617	425640	SCREW,ASSEMBLED WAS UOC:2CA,2DA	4
22	PFOZZ	5306-00-069-3019	88044	AN8C56A	BOLT,MACHINE UOC:2CA,2DA	2
23	PAOZZ	5310-00-184-8992	96906	MS9320-14	WASHER,FLAT UOC:2CA,2DA	1
24	PAOZZ	5640-01-146-1890	19207	12275891	INSULATION PIPE FIT OUTER,LEFT BANK UOC:2CA,2DA	1
25	PAOZZ	5310-01-151-2732	15653	SPL51712-6	NUT,SELF-LOCKING,HE UOC:2CA,2DA	12
26	PAOZZ	4320-01-268-2464	19207	12314567	EJECTOR EXHAUST LEFT UOC:2CA,2DA	1
27	PAOZZ	5640-01-146-1891	19207	12275892	INSULATION SLEEVING INNER,LEFT BANK UOC:2CA,2DA	1
28	PAOZZ	5310-00-209-1366	96906	MS35335-58	WASHER,LOCK UOC:2CA,2DA	22

(1) ITEM NO.	(2) SMR CODE	(3) NSN	(4) CAGEC	(5) PART NUMBER	(6) DESCRIPTION AND USABLE ON CODES(UOC)	(7) QTY
29	PAOZZ	5310-00-934-9761	80205	MS35649-264	NUT,PLAIN,HEXAGON UOC:2CA,2DA	22
30	PAOZZ	5640-01-146-1889	19207	12275890	INSULATION SLEEVING INNER,RIGHT BANK UOC:2CA,2DA	1
31	PAOZZ	4710-01-145-8311	19207	12275831	TUBE,BENT,METALLIC UOC:2CA,2DA	1
32	PAOZZ	4730-00-993-5002	96906	MS51820-6P	ELBOW,TUBE UOC:2CA,2DA	1
33	PAOZZ	5330-01-207-6449	19207	12354303	GASKET PART OF KIT P/N 5704488 UOC:2CA,2DA	2
34	PBOZZ	5340-01-145-8302	19207	12275823	BRACKET,ANGLE REAR,RIGHT UOC:2CA,2DA	1
35	PAOZZ	5340-01-165-0580	19207	12314637	CLAMP,LOOP UOC:2CA,2DA	2
36	PAOZZ	5305-00-042-5594	24617	425594	SCREW,ASSEMBLED WAS UOC:2CA,2DA	1
37	PAOZZ	5340-01-145-8301	19207	12275822	BRACKET,ANGLE FRONT UOC:2CA,2DA	2
38	PAOZZ	4730-01-003-6044	96906	MS51815-8	ELBOW,PIPE TO TUBE UOC:2CA,2DA	1
39	PAOZZ	4710-01-146-1900	19207	12314565	TUBE ASSEMBLY,METAL REAR,LEFT UOC:2CA,2DA	1
40	PAOZZ	5340-00-282-7548	96906	MS21333-52	CLAMP,LOOP UOC:2CA,2DA	1
41	PAOZZ	4730-00-908-3198	83299	0612596-00	CLAMP,HOSE UOC:2CA,2DA	2
42	PAOZZ	4720-00-896-6166	19207	10898794	HOSE,AIR DUCT UOC:2CA,2DA	2
43	PAOZZ	4710-01-150-4822	19207	12275880	TUBE,BENT,METALLIC UOC:2CA,2DA	1

END OF FIGURE

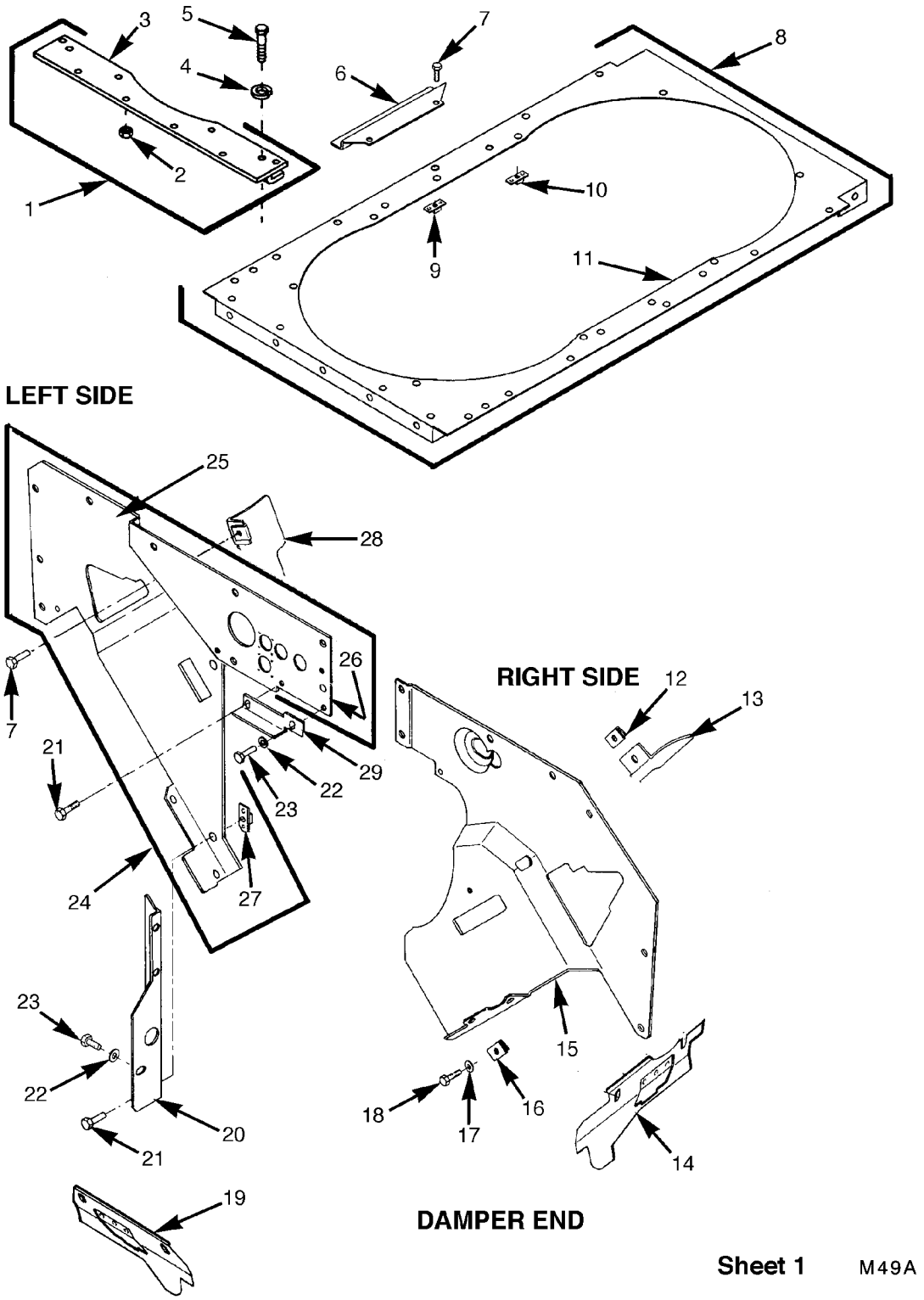

FIGURE 51. ENGINE SHROUDS (SHEET 1 OF 2)

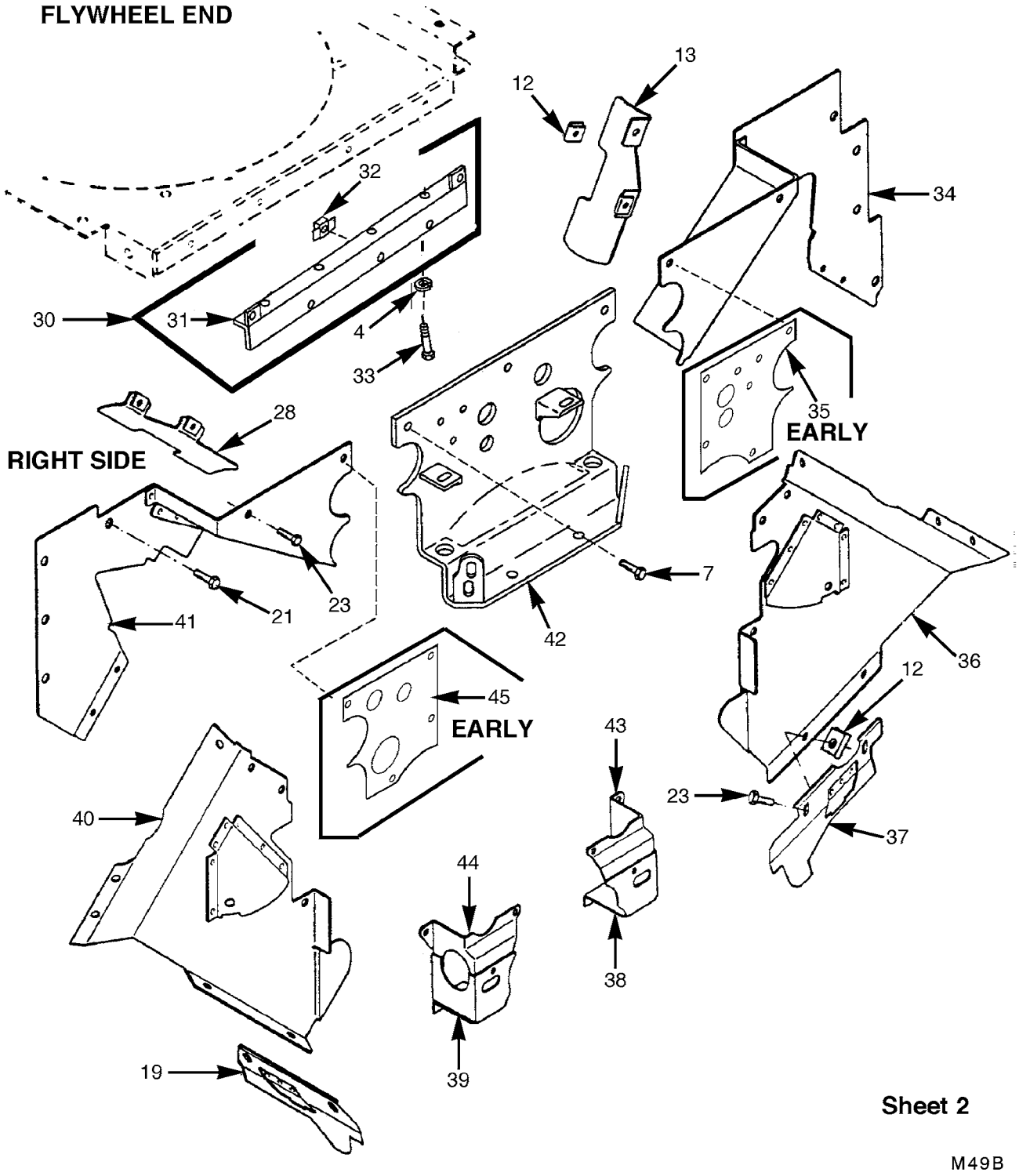

FIGURE 51. ENGINE SHROUDS (SHEET 2 OF 2)

(1) ITEM NO.	(2) SMR CODE	(3) NSN	(4) CAGEC	(5) PART NUMBER	(6) DESCRIPTION AND USABLE ON CODES(UOC)	(7) QTY
					GROUP 05: COOLING SYSTEM	
					GROUP 0502: COWLING,DEFLECTORS,AIR DUST SHROUDS	
					FIG.51 ENGINE SHROUDS	
1	PBOFF	5340-01-044-5315	19207	11671485	BRACKET,MOUNTING UOC:EFR	1
2	PAFZZ	5310-00-058-5811	19207	585811	.NUT,PLAIN,WELDING UOC:EFR	6
3	XAFZZ		19207	11671485-1	.BRACKET UOC:EFR	1
4	PAOZZ	5310-00-637-9541	96906	MS35338-46	WASHER,LOCK UOC:EFR	9
5	PAOZZ	5305-00-269-3234	80204	B1821BH038F075N	SCREW,CAP,HEXAGON H UOC:EFR	4
6	PBOZZ	5340-01-026-9982	19207	8682561	COVER,ACCESS	2
7	PAOZZ	5306-00-741-4584	19207	7414584	BOLT,ASSEMBLED WASH	16
8	PBOFF	2815-00-394-9707	19207	11684088	SHROUD,DIESEL ENGIN UOC:2CA,2DA	1
8	PBOFF	4140-01-017-6850	19207	11684201	HOUSING,CENTRIFUGAL UOC:EFR	1
9	PAFZZ	5310-00-486-0412	19207	11684093-2	.NUT,PLAIN,PLATE UOC:2CA,2DA	30
9	PAFZZ	5310-00-486-0412	19207	11684093-2	.NUT,PLAIN,PLATE UOC:EFR	33
10	PAFZZ	5310-00-486-0406	19207	11684093-1	.NUT,PLAIN,PLATE	18
11	XAFZZ		19207	11684088-1	.SHROUD UOC:2CA,2DA	1
11	XAFZZ		19207	11684201-1	.SHROUD,ENGINE UOC:EFR	1
12	PAOZZ	5310-00-655-9975	19207	8764639	NUT,SELF-LOCKING,PL	30
13	PBOZZ	2805-00-760-5838	19207	8682757	BAFFLE,AIRFLOW,ENGI NO.1 RIGHT BANK AND NO.6 LEFT BANK	2
14	PBOZZ		02978	E2DRS131-001	SHROUD,COOLING NO.1 RIGHT BANK	1
15	PBOZZ	5340-01-512-1782	19207	12354450	COVER,ACCESS RIGHT BANK UOC:2CA,2DA	1
15	PBOZZ	2815-00-490-5551	19207	11683983	SHROUD,DIESEL ENGIN RIGHT BANK UOC:EFR	1
16	PAOZZ	5340-00-774-4858	02978	302491	CLIP,SPRING TENSION	3
17	PAOZZ	5310-00-582-5965	80205	MS35338-44	WASHER,LOCK	3
18	PAOZZ	5305-00-071-2506	80204	B1821BH025C050N	SCREW,CAP,HEXAGON H	3
19	PAOZZ	2930-00-402-4421	19207	8761270	SHROUD,CYLINDER COO NO.1 LEFT BANK AND NO.6 RIGHT BANK	2
20	PAOZZ	5342-00-388-9994	19207	11683976	BRACKET,ENGINE ACCE	1
21	PAOZZ	5305-00-042-5640	24617	425640	SCREW,ASSEMBLED WAS	13
22	PAOZZ	5310-00-209-0786	96906	MS35335-33	WASHER,LOCK	10
23	PAOZZ	5305-01-510-8434	19207	10898763	SCREW,MACHINE	41
24	PBOFF	5340-01-510-0252	19207	12354473	PLATE,SHROUD,DIESEL LEFT BANK	1
25	XAFZZ		19207	11683938	.PLATE	1
26	XAFZZ		19207	12354474	.PLATE, ENGINE SHROU	1
27	PAFZZ	5310-00-486-0406	19207	11684093-1	.NUT,PLAIN,PLATE	4
28	PFOZZ	2805-00-760-5837	19207	8682756	BAFFLE,AIRFLOW,ENGI NO.1 LEFT BANK AND NO.6 RIGHT BANK	2
29	PAOZZ	5342-00-388-9993	19207	11683974	BRACKET,ENGINE ACCE	1
30	PBFFF	2520-01-024-9267	19207	11684224	BRACKET,LEVER,LINKA UOC:EFR	1
31	XAFZZ		19207	11684224-1	.BRACKET,TRANSMISSIO UOC:EFR	1
32	PAFZZ	5310-00-486-0412	19207	11684093-2	.NUT,PLAIN,PLATE UOC:EFR	3
33	PAFZZ	5305-00-269-3237	80204	B1821BH038F113N	SCREW,CAP,HEXAGON H UOC:EFR	4

(1) ITEM NO.	(2) SMR CODE	(3) NSN	(4) CAGEC	(5) PART NUMBER	(6) DESCRIPTION AND USABLE ON CODES(UOC)	(7) QTY
34	PBOZZ	5340-00-410-1125	19207	11683936	PLATE,MOUNTING UPPER,LEFT BANK	1
35	PAOFF	2930-01-007-5276	19207	11684264	SHROUD,COOLING MANI LEFT BANK (EARLY)	1
36	PBOZZ	2805-00-522-2576	19207	8682626	BAFFLE,AIRFLOW,NONA LOWER,LEFT BANK	1
37	PBOZZ	6115-00-442-5894	19207	8761269	ADAPTER,GENERATOR T NO.1 RIGHT BANK AND NO.6 LEFT BANK	2
38	PBOZZ	2930-01-012-2879	19207	11684265	SHROUD,FAN COOLING LOWER,LEFT BANK	1
39	PBOZZ	2930-01-007-5277	19207	11684266	SHROUD,COOLING ENGI LOWER,RIGHT BANK	1
40	PBOZZ	2930-00-436-3207	19207	8682623	SHROUD,FAN,RADIATOR LOWER,RIGHT BANK	1
41	PAOZZ	2520-00-467-3420	19207	11684026	DEFLECTOR,DIRT AND UPPER,RIGHT BANK UOC:2DA	1
41	PBOZZ	5340-00-423-3618	19207	11684092	PLATE,MOUNTING UPPER,RIGHT BANK UOC:EFR,2CA	1
42	PBOZZ	2990-01-437-3464	19207	12354414	GUARD,MUFFLER-EXHAU	1
43	PBOZZ	2930-01-498-3157	19207	12354416	SHROUD,CAMSHAFT DRI UPPER,LEFT	1
44	PBOZZ	2815-01-437-4746	19207	12354415	SHROUD,CAMSHAFT DRI UPPER,RIGHT BANK	1
45	PAOZZ	2930-00-402-4420	19207	10898756	SHROUD,EXHAUST MANI RIGHT BANK (EARLY)	1

END OF FIGURE

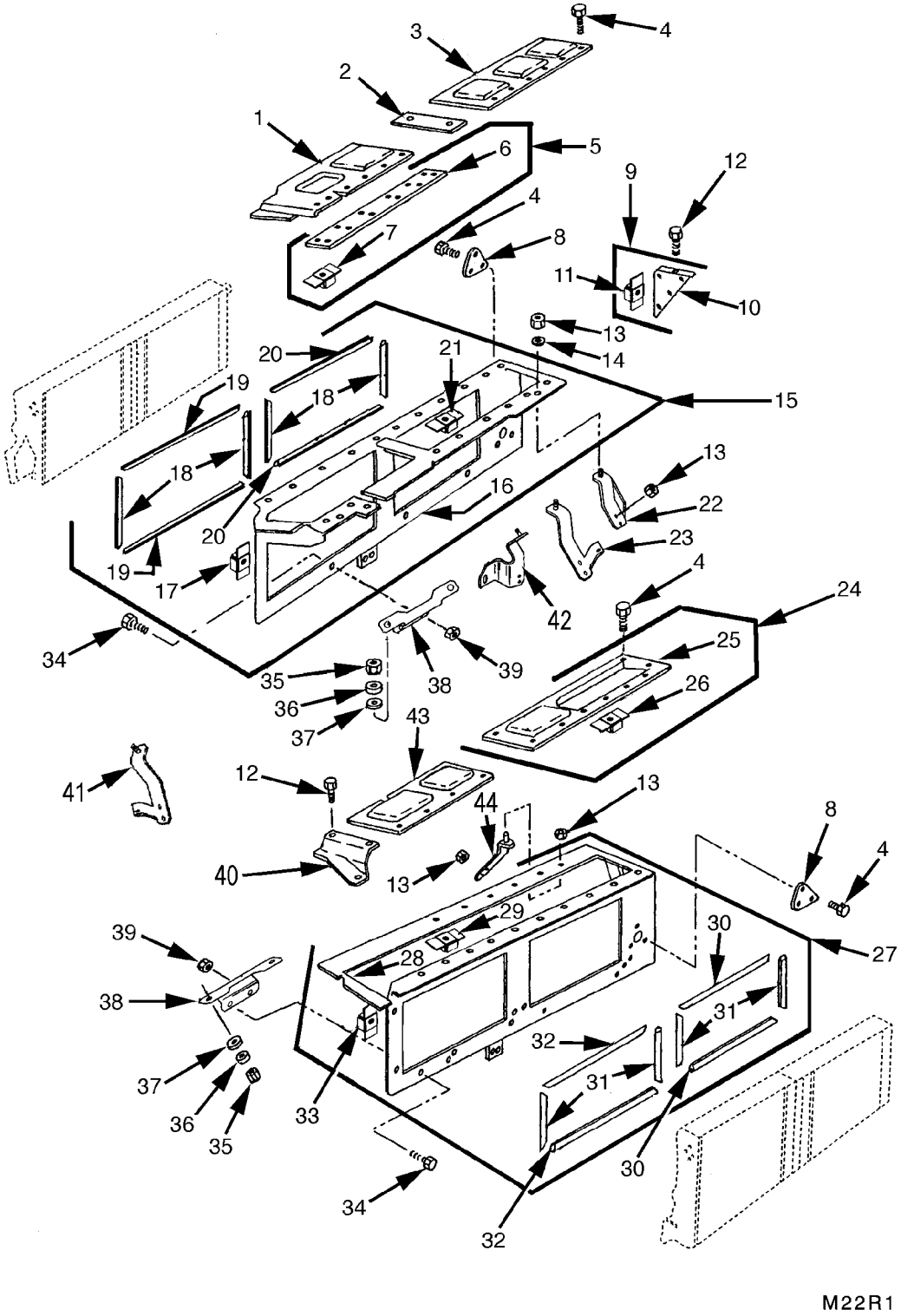

FIGURE 52. OIL COOLER FRAMES AND SHROUDS

(1) ITEM NO.	(2) SMR CODE	(3) NSN	(4) CAGEC	(5) PART NUMBER	(6) DESCRIPTION AND USABLE ON CODES(UOC)	(7) QTY
					GROUP 0502: ENGINE LUBRICATION SYSTEM	
					FIG.52 OIL COOLER FRAMES AND SHROUDS	
1	PAOZZ	5340-00-394-9706	19207	11684017	COVER,ACCESS. UOC:2CA,2DA	1
1	PAOZZ	5340-01-017-6795	19207	11684220	COVER,ACCESS. . . . . UOC:EFR	1
2	PAOZZ	5340-01-017-6946	19207	11684217	STRAP,RETAINING. . . . . UOC:EFR	1
3	PAOZZ	5340-00-399-5301	19207	11683939	COVER,ACCESS.	1
4	PAOZZ	5306-00-741-4584	19207	7414584	BOLT,ASSEMBLED WASH	34
5	PBOOO	5340-01-030-8870	19207	11684219	PLATE,MENDING . . . . . UOC:EFR	1
6	XAOZZ		19207	11684219-1	.ADAPTER . . . . . UOC:EFR	1
7	PAOZZ	5310-00-486-0406	19207	11684093-1	.NUT,PLAIN,PLATE. . . . . UOC:EFR	5
8	PBOZZ	5340-00-410-1045	19207	11684132	COVER,ACCESS.	2
9	PAOOO	5340-00-394-9700	19207	11683985	COVER,ACCESS.	1
10	XAOZZ		19207	11683985-1	.COVER,ACCESS	1
11	PAOZZ	5310-00-486-0406	19207	11684093-1	.NUT,PLAIN,PLATE.	5
12	PAOZZ	5305-00-042-5640	24617	425640	SCREW,ASSEMBLED WAS.	5
13	PAOZZ	5310-00-088-0553	96906	MS21044N5	NUT,SELF-LOCKING,HE	36
14	PAOZZ	5310-00-081-4219	96906	MS27183-12	WASHER,FLAT	12
15	PBOOO	5340-00-392-9515	19207	11684041	BRACKET,MOUNTING	1
16	XAOZZ		19207	11684041-1	.FRAME,OIL COOLER SU	1
17	PAOZZ	5310-00-486-0406	19207	11684093-1	.NUT,PLAIN,PLATE.	34
18	MOOZZ		19207	11684079-1	.RUBBER STRIP (MAKE FROM RUBBER SHEET,CELLULAR P/N 11678085-2)	V
19	MOOZZ		19207	11684079-3	.RUBBER STRIP (MAKE FROM RUBBER SHEET,CELLULAR P/N 11678085-2)	V
20	MOOZZ		19207	11684079-2	.RUBBER STRIP (MAKE FROM RUBBER SHEET,CELLULAR P/N 11678085-2)	V
21	PAOZZ	5310-00-486-0412	19207	11684093-2	.NUT,PLAIN,PLATE.	2
22	PBOZZ	5342-01-512-8535	19207	12354449	BRACKET,ENGINE ACCE UOC:2CA,2DA	2
23	PBOZZ	5342-01-512-8141	19207	12354413	BRACKET,COOLING FAN	1
24	PAOOO	5340-01-010-8946	19207	11684246	COVER,ACCESS.	1
25	XAOZZ		19207	11684246-1	.COVER,ACCESS	1
26	PAOZZ	5310-00-486-0412	19207	11684093-2	.NUT,PLAIN,PLATE.	2
27	PBOOO	5340-00-392-9547	19207	11684048	BRACKET,MOUNTING	1
28	XAOZZ		19207	11684048-1	.FRAME,ENGINE OIL CO	1
29	PAOZZ	5310-00-486-0412	19207	11684093-2	.NUT,PLAIN,PLATE.	2
30	MOOZZ		19207	11684079-2	.RUBBER STRIP (MAKE FROM RUBBER SHEET,CELLULAR P/N 11678085-2)	V
31	MOOZZ		19207	11684079-1	.RUBBER STRIP (MAKE FROM RUBBER SHEET,CELLULAR P/N 11678085-2)	V
32	MOOZZ		19207	11684079-3	.RUBBER STRIP (MAKE FROM RUBBER SHEET,CELLULAR P/N 11678085-2)	V
33	PAOZZ	5310-00-486-0406	19207	11684093-1	.NUT,PLAIN,PLATE.	36
34	PAOZZ	5305-00-912-5113	96906	MS51096-359	SCREW,CAP,HEXAGON H	12
35	PAOZZ	5310-00-274-9364	96906	MS21045-7	NUT,SELF-LOCKING,HE	12
36	PAOZZ	5365-00-486-0405	19207	11684106	SPACER,SLEEVE	12
37	PAOZZ	5325-00-276-6096	88044	AN931B9-13	GROMMET,NONMETALLIC	12
38	PBOZZ	2520-00-394-9713	19207	11683954	SUPPORT,OIL COOLER	6
39	PAOZZ	5310-00-959-1488	96906	MS51922-21	NUT,SELF-LOCKING,HE	12
40	PAOZZ	5340-00-432-0056	19207	11683941	COVER,ACCESS. UOC:2CA,2DA	1
40	PAOZZ	5340-01-032-7369	19207	11683941-1	COVER,ACCESS. . . . . UOC:EFR	1
41	PBOZZ	5340-01-038-8296	19207	12254292	BRACKET,MOUNTING	1
42	PBOZZ	5342-01-511-0621	19207	12354412	BRACKET.	1

(1) ITEM NO.	(2) SMR CODE	(3) NSN	(4) CAGEC	(5) PART NUMBER	(6) DESCRIPTION AND USABLE ON CODES(UOC)	(7) QTY
43	PAOZZ	5340-00-397-3313	19207	11683984	COVER,ACCESS	1
44	PBOZZ	2930-01-005-1549	19207	11682768	BRACKET,COOLING FAN UOC:EFR	9
44	PBOZZ	2930-01-005-1549	19207	11682768	BRACKET,COOLING FAN UOC:2CA,2DA	7

END OF FIGURE

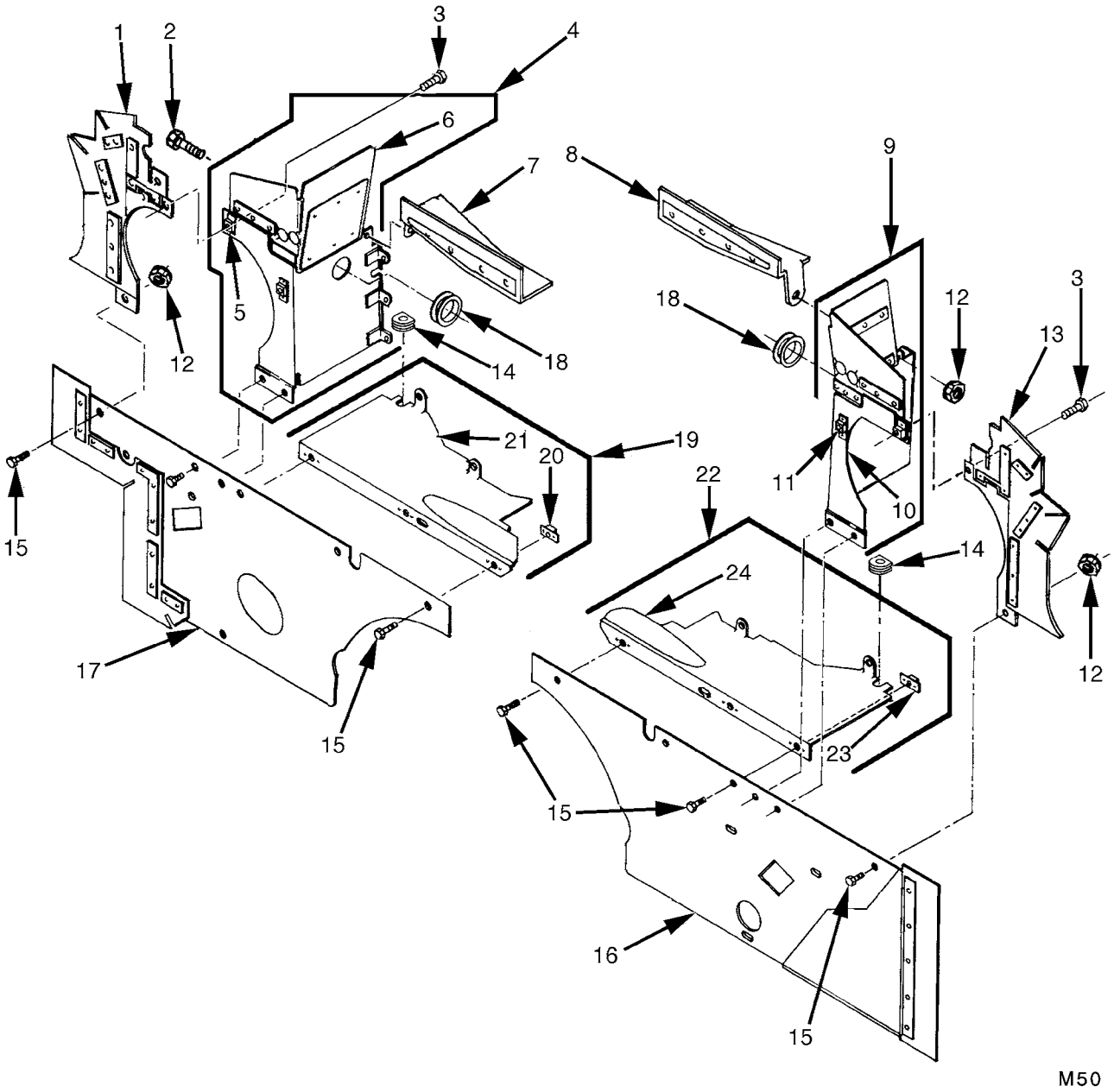

FIGURE 53. TURBOCHARGER AND TRANSMISSION SHROUDING
(MODELS AVDS-1790-2CA AND AVDS-1790-2DA)

(1) ITEM NO.	(2) SMR CODE	(3) NSN	(4) CAGEC	(5) PART NUMBER	(6) DESCRIPTION AND USABLE ON CODES(UOC)	(7) QTY
					GROUP 0502: COWLING,DEFLECTORS, AND AIR DUCT SHROUDS	
					FIG.53 TURBOCHARGER AND TRANSMISSION SHROUDING (MODELS AVDS-1790-2CA AND AVDS-1790-2DA)	
1	PAOZZ	2835-01-152-7118	19207	12314599	SHROUD SEGMENT,TURB OUTER,LEFT BANK. UOC:2CA,2DA	1
2	PAOZZ	5305-00-042-5640	24617	425640	SCREW,ASSEMBLED WAS. UOC:2CA,2DA	14
3	PAOZZ	5306-00-225-9086	96906	MS90726-31	BOLT,MACHINE UOC:2CA,2DA	7
4	PAOFF	4910-01-511-5453	19207	12354435	FIXTURE ASSEMBLY,TU INNER,LEFT BANK UOC:2CA,2DA	1
5	PAFZZ	5310-00-486-0406	19207	11684093-1	.NUT,PLAIN,PLATE. UOC:2CA,2DA	4
6	XAFZZ		19207	12354434	.SHROUD. UOC:2CA,2DA	1
7	PBOZZ	3020-01-073-4085	19207	12275727	GUARD,MECHANICAL DR UPPER,LEFT BANK UOC:2CA,2DA	1
8	PBOZZ	2815-00-410-1131	19207	11683977	SHROUD,DIESEL ENGIN UPPER,RIGHT BANK UOC:2CA,2DA	1
9	PAOFF	4910-01-511-5452	19207	12354432	FIXTURE ASSEMBLY,TU INNER,RIGHT BANK UOC:2CA,2DA	1
10	XAFZZ		19207	12354431	.PLATE. UOC:2CA,2DA	1
11	PAFZZ	5310-00-486-0406	19207	11684093-1	.NUT,PLAIN,PLATE. UOC:2CA,2DA	4
12	PAOZZ	5310-00-088-0553	19207	503345	NUT,SELF-LOCKING,HE UOC:2CA,2DA	7
13	PBOZZ	2590-01-152-8806	19207	12314598	BRACKET,VEHICULAR C OUTER,RIGHT BANK UOC:2CA,2DA	1
14	PAOZZ	5325-00-182-4707	19207	10935447	GROMMET,NONMETALLIC UOC:2CA,2DA	2
15	PAOZZ	5306-00-741-4584	19207	7414584	BOLT,ASSEMBLED WASH UOC:2CA,2DA	16
16	PBOZZ	5340-00-453-5376	19207	10865247	PLATE,MOUNTING RIGHT BANK UOC:2CA,2DA	1
17	PBOZZ	5340-00-193-8211	19207	11641919	PLATE,MOUNTING LEFT BANK. UOC:2CA,2DA	1
18	PAOZZ	5325-01-097-0347	96906	MS35490-16	GROMMET,NONMETALLIC UOC:2CA,2DA	2
19	PBOFF	2520-01-509-6284	19207	12354438	COVER ASSEMBLY,TRAN LOWER,LEFT BANK UOC:2CA,2DA	1
20	PAFZZ	5310-00-486-0406	19207	11684093-1	.NUT,PLAIN,PLATE. UOC:2CA,2DA	3
21	XAFZZ		19207	12354437	.SHROUD. UOC:2CA,2DA	1
22	PBOFF	2520-01-509-6286	19207	12354440	COVER ASSEMBLY,TRAN LOWER,RIGHT BANK UOC:2CA	1
22	PBOFF	2520-01-509-6287	19207	12354451	COVER ASSEMBLY,TRAN LOWER,RIGHT BANK UOC:2DA	1
23	PAFZZ	5310-00-486-0406	19207	11684093-1	.NUT,PLAIN,PLATE. UOC:2CA,2DA	3
24	XAFZZ		19207	12354439	.SHROUD. UOC:2CA	1

(1) ITEM NO.	(2) SMR CODE	(3) NSN	(4) CAGEC	(5) PART NUMBER	(6) DESCRIPTION AND USABLE ON CODES(UOC)	(7) QTY
24	XAFZZ		19207	12354442	.SHROUD. UOC:2DA	1

END OF FIGURE

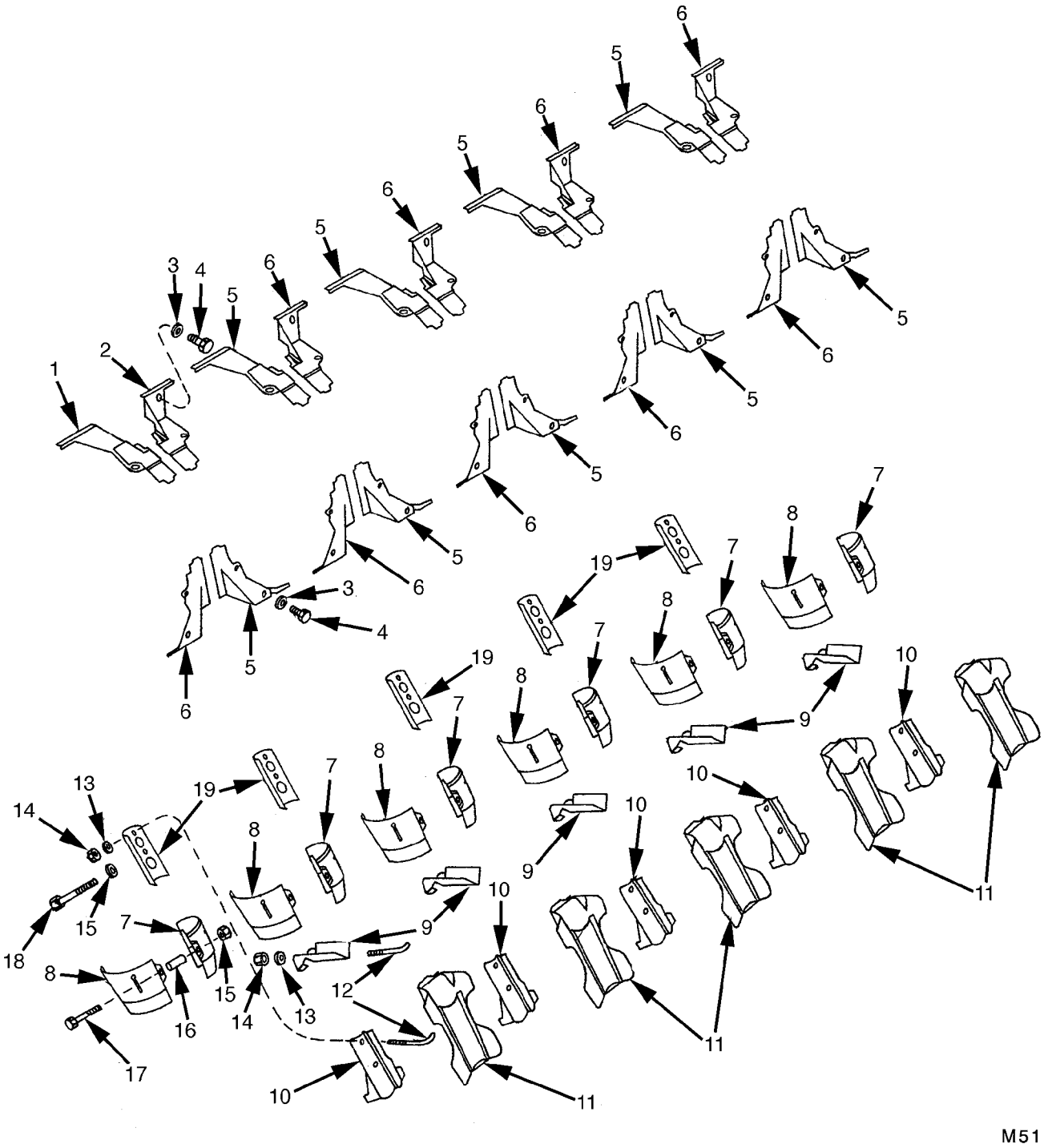

FIGURE 54. CYLINDER DEFLECTORS AND SHROUDS

(1) ITEM NO.	(2) SMR CODE	(3) NSN	(4) CAGEC	(5) PART NUMBER	(6) DESCRIPTION AND USABLE ON CODES(UOC)	(7) QTY
					GROUP 0502: COWLING,DEFLECTORS, AIR DUCTS,SHROUDS	
					FIG.54 CYLINDER DEFLECTORS AND SHROUDS	
1	PBFZZ	5342-01-007-7209	19207	11684004-2	BRACKET,ENGINE ACCE RIGHT BANK. UOC:2CA,2DA	1
1	PAFZZ	5342-01-011-2322	19207	11684221-2	BRACKET,ENGINE ACCE UOC:EFR	1
2	PFFZZ	5342-01-012-9150	19207	11684004-1	BRACKET,ENGINE ACCE LEFT BANK UOC:2CA,2DA	1
2	PAFZZ	2815-01-024-9266	19207	11684221-1	SHROUD,ENGINE HEAD UOC:EFR	1
3	PAFZZ	5310-00-209-0786	96906	MS35335-33	WASHER,LOCK	40
4	PAFZZ	5305-00-071-2506	80204	B1821BH025C050N	SCREW,CAP,HEXAGON H	40
5	PBFZZ	5342-01-011-9019	19207	11684003-2	BRACKET,ENGINE ACCE RIGHT BANK	9
6	PBFZZ	5342-01-010-9089	19207	11684003-1	BRACKET,ENGINE ACCE LEFT BANK	9
7	PAFZZ	2815-00-679-8090	19207	8682701	DEFLECTOR,AIRFLOW RIGHT BANK	12
8	PAFZZ	2815-00-679-8093	19207	8682700	DEFLECTOR,AIRFLOW LEFT BANK	12
9	PAFZZ	2805-00-679-8091	19207	8682492	BAFFLE,AIRFLOW,ENGI	10
10	PAFZZ	5340-00-402-4435	19207	8761164	STRAP,RETAINING	1
11	PAFZZ	2805-00-679-8092	19207	8682620	BAFFLE,AIRFLOW,ENGI	10
12	PAFZZ	5306-00-774-4720	19207	7744720	BOLT,HOOK	20
13	PAFZZ	5310-00-167-0818	80205	NAS1149F0363P	WASHER,FLAT	30
14	PAFZZ	5310-00-877-5797	96906	MS21044N3	NUT,SELF-LOCKING,HE	20
15	PAFZZ	5310-00-877-5796	80205	MS21044N4	NUT,SELF-LOCKING,HE	12
16	PAFZZ	5365-00-407-7003	19207	8761268	SPACER,SLEEVE	12
17	PAFZZ	5305-00-267-8960	80204	B1821BH025F250N	SCREW,CAP,HEXAGON H	12
18	PAFZZ	5306-00-678-1885	19207	8761432	BOLT,MACHINE	10
19	PAFZZ	5340-00-089-8830	19207	8682702	COVER,ACCESS OUTER	10

END OF FIGURE

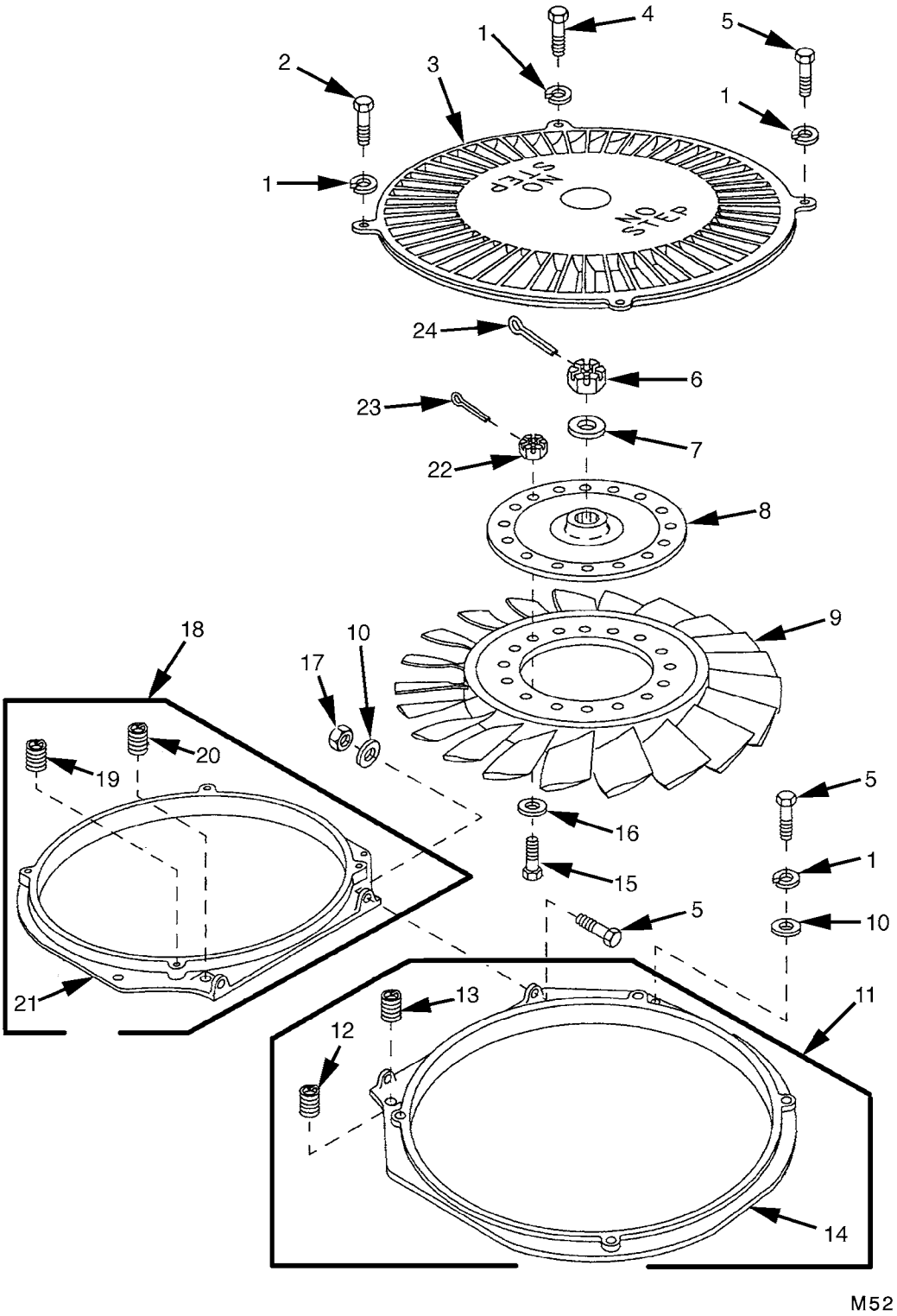

FIGURE 55. ENGINE COOLING FAN AND HOUSING

(1) ITEM NO.	(2) SMR CODE	(3) NSN	(4) CAGEC	(5) PART NUMBER	(6) DESCRIPTION AND USABLE ON CODES(UOC)	(7) QTY
					GROUP 0505: FAN ASSEMBLY	
					FIG.55 ENGINE COOLING FAN AND HOUSING	
1	PAOZZ	5310-00-637-9541	96906	MS35338-46	WASHER,LOCK	12
2	PAOZZ	5306-00-180-0238	88044	AN6-5A	BOLT,MACHINE	4
3	PBOZZ	2930-00-350-9401	19207	8682658	HOUSING,CENTRIFUGAL	2
4	PAOZZ	5305-00-269-3245	80204	B1821BH038F275N	SCREW,CAP,HEXAGON H	2
5	PAOZZ	5305-00-269-3240	80204	B1821BH038F150N	SCREW,CAP,HEXAGON H	8
6	PAOZZ	5310-00-776-7728	19207	7767728	NUT,PLAIN,SLOTTED,H	2
7	PAOZZ	5310-00-678-3257	19207	8761230	WASHER,FLAT	2
8	PAOZZ	3040-00-678-3266	19207	8761050	HUB,BODY	2
9	PAODD	2930-00-679-5742	02978	554132	IMPELLER,FAN,AXIAL	2
10	PAOZZ	5310-00-333-7348	19207	8679576	WASHER,FLAT	6
11	PAOHH	2930-00-997-1537	19207	8682785	SHROUD,FAN,RADIATOR	1
12	PAHZZ	5325-00-291-3493	96906	MS124658	.INSERT,SCREW THREAD	2
13	PAHZZ	5325-00-045-2676	96906	MS124657	.INSERT,SCREW THREAD	2
14	XAHZZ		19207	8682726	.HOUSING	1
15	PAOZZ	5306-00-678-3325	19207	8761337	BOLT,MACHINE	32
16	PAHZZ	5310-00-167-0820	80205	NAS1149F0563P	WASHER,FLAT	32
17	PAOZZ	5310-00-959-1488	96906	MS51922-21	NUT,SELF-LOCKING,HE	2
18	PBOHH	5340-00-442-5895	19207	8682682	BRACKET,MOUNTING	1
19	PAHZZ	5325-00-291-3493	96906	MS124658	.INSERT,SCREW THREAD	2
20	PAHZZ	5325-00-045-2676	96906	MS124657	.INSERT,SCREW THREAD	2
21	XAHZZ		19207	8761084	.HOUSING	1
22	PAOZZ		19207	596610	NUT,PLAIN,SLOTTED,H	32
23	PAOZZ	5315-00-839-2325	80205	MS24665-132	PIN,COTTER	32
24	PAOZZ	5315-00-013-7214	80205	MS24665-359	PIN,COTTER	2

END OF FIGURE

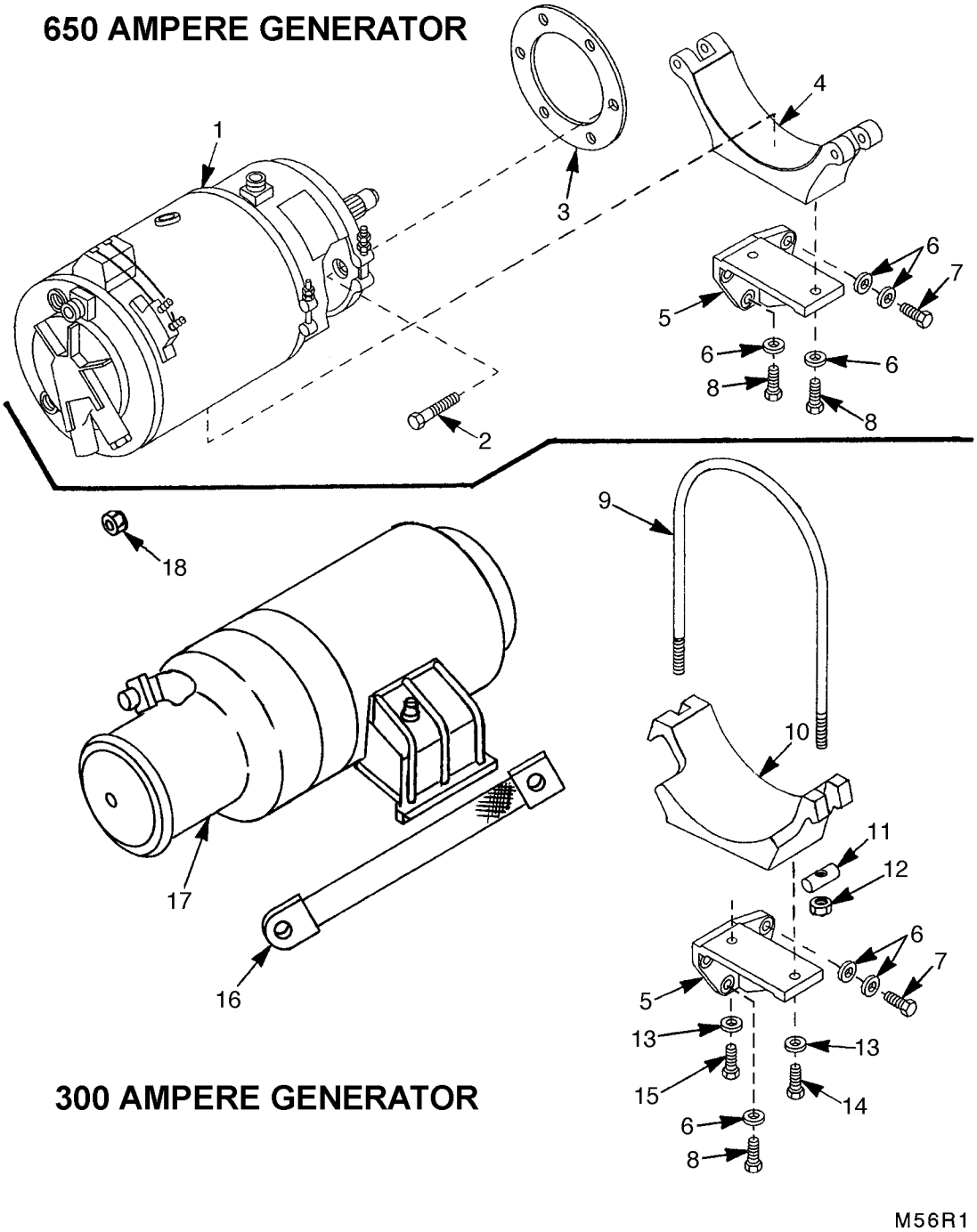

FIGURE 56. ENGINE GENERATOR, CRADLE, AND BRACKET

(1) ITEM NO.	(2) SMR CODE	(3) NSN	(4) CAGEC	(5) PART NUMBER	(6) DESCRIPTION AND USABLE ON CODES(UOC)	(7) QTY
					GROUP 06: ELECTRICAL SYSTEM	
					GROUP 0601: GENERATOR,ALTERNATOR	
					FIG.56 ENGINE GENERATOR, CRADLE, AND BRACKET	
1	PAOHD	2920-00-441-8137	19207	11655469	GENERATOR,ENGINE AC (FOR COMPONENT PARTS SEE TM9-2920-252-34P,GROUP 0601). UOC:2CA	1
2	PAOZZ	5306-01-046-7990	96906	MS35764-1293	BOLT,SELF-LOCKING UOC:2CA	6
3	PAOZZ	5330-01-417-1912	19207	8666738 NON-ASBESTOS	GASKET PART OF KIT P/N 5704488 . . . . . UOC:2CA	1
4	PAOZZ	2920-01-048-6052	19207	11684162	CRADLE ASSEMBLY,GEN. UOC:2CA	1
5	PBOZZ	2920-00-398-6540	19207	11684057	GENERATOR BRACKET UOC:2CA	1
6	PAOZZ	5310-00-776-7318	19207	7767318	WASHER,FLAT UOC:2CA	8
7	PAOZZ	5305-00-914-6131	80204	B1821BH038F175D	SCREW,CAP,HEXAGON H UOC:2CA	2
8	PAOZZ	5305-00-269-3239	80204	B1821BH038F138N	SCREW,CAP,HEXAGON H	4
9	PAOZZ	5306-00-413-4373	19207	10882750	BOLT,U. UOC:EFR,2DA	1
10	PBOZZ	5340-01-145-4316	19207	12275797	BRACKET,MOUNTING UOC:EFR,2DA	1
11	PAOZZ	2920-00-455-5835	19207	10882765	BAR,CLAMPING,GENERA UOC:EFR,2DA	2
12	PAOZZ	5310-00-088-0553	19207	503345	NUT,SELF-LOCKING,HE UOC:EFR,2DA	2
13	PAOZZ	5310-00-776-7318	19207	7767318	WASHER,FLAT UOC:EFR,2DA	2
14	PAOZZ	5305-00-269-3242	80204	B1821BH038F200N	SCREW,CAP,HEXAGON H UOC:EFR,2DA	1
15	PAOZZ		80204	B1821BH038F175G	SCREW,CAP,HEXAGON H UOC:EFR,2DA	1
16	PBOZZ	5995-00-499-1782	19207	11682595	LEAD,ELECTRICAL. UOC:EFR,2DA	1
17	PAOFD	2920-00-830-6660	31435	G22-6F	GENERATOR,ENGINE AC (FOR COMPONENT PARTS SEE TM9-2920-244-34&P,GROUP 0601). UOC:EFR,2DA	1
18	PAOZZ		21450	503383	NUT UOC:EFR,2DA	6

END OF FIGURE

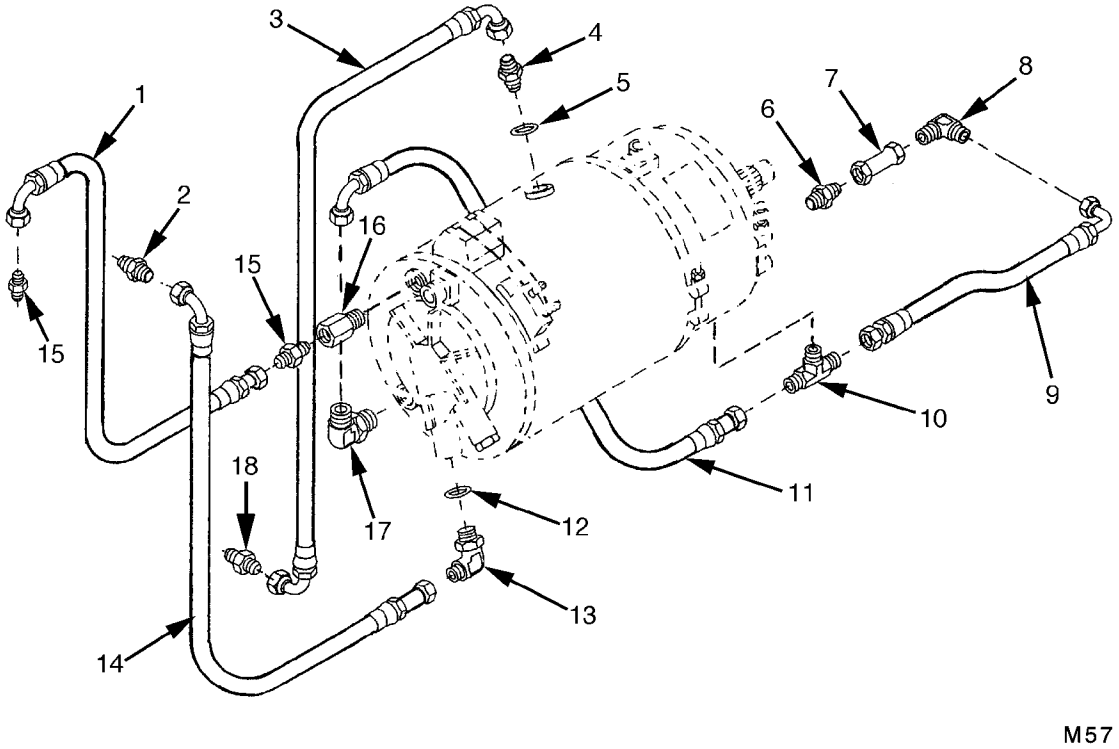

FIGURE 57. GENERATOR OIL HOSES
(MODEL AVDS-1790-2CA)

(1) ITEM NO.	(2) SMR CODE	(3) NSN	(4) CAGEC	(5) PART NUMBER	(6) DESCRIPTION AND USABLE ON CODES(UOC)	(7) QTY
					GROUP 0601: GENERATOR,ALTERNATOR	
					FIG.57 GENERATOR OIL HOSES (MODEL AVDS-1790-2CA)	
1	PAOZZ	4720-01-030-8526	96906	MS8005E212C	HOSE ASSEMBLY,NONME UOC:2CA	1
2	PAOZZ	4730-01-016-5907	19207	11684111	ADAPTER,STRAIGHT,PI UOC:2CA	1
3	PAOZZ	4720-01-097-4732	96906	MS8005H237F090	HOSE ASSEMBLY,NONME UOC:2CA	1
4	PAOZZ	4730-00-057-5557	96906	MS24487-8	ADAPTER,STRAIGHT,TU UOC:2CA	1
5	PAOZZ	5331-00-166-1063	81343	M83248/1-114	O-RING PART OF KIT P/N 5704488 . . . . . UOC:2CA	1
6	PAOZZ	4730-00-698-4042	81343	AS4860J02	NIPPLE,PIPE UOC:2CA	1
7	PAOZZ	4820-01-011-9665	19207	11668690	VALVE,CHECK UOC:2CA	1
8	PAOZZ	4730-00-277-2448	96906	MS20822-4-4S	ELBOW,PIPE TO TUBE UOC:2CA	1
9	PAOZZ	4720-01-415-0979	96906	MS8005E074C	HOSE ASSEMBLY,NONME UOC:2CA	1
10	PAOZZ	4730-01-434-5429	19207	11668689	TEE,PIPE TO TUBE UOC:2CA	1
11	PAOZZ	4720-00-723-7397	40223	032505E0140	HOSE ASSEMBLY,NONME UOC:2CA	1
12	PAOZZ	5331-00-108-5691	98897	LS4634-10	O-RING PART OF KIT P/N 5704488 . . . . . UOC:2CA	1
13	PAOZZ	4730-01-032-1393	19207	11668634	ELBOW,TUBE TO BOSS UOC:2CA	1
14	PAOZZ	4720-01-098-0829	96906	MS8005H147C	HOSE ASSEMBLY,NONME UOC:2CA	1
15	PAOZZ	4730-00-947-6101	96906	MS51500A8S	ADAPTER,STRAIGHT,PI UOC:2CA	2
16	PAOZZ	4730-00-501-7013	19207	10951108	COUPLING,PIPE UOC:2CA	1
17	PAOZZ	4730-01-293-2920	81343	4-4 071502SA	ELBOW,PIPE TO TUBE UOC:2CA	1
18	PAOZZ	4730-00-322-8456	93568	00242-0114	ADAPTER,STRAIGHT,PI UOC:2CA	1

END OF FIGURE

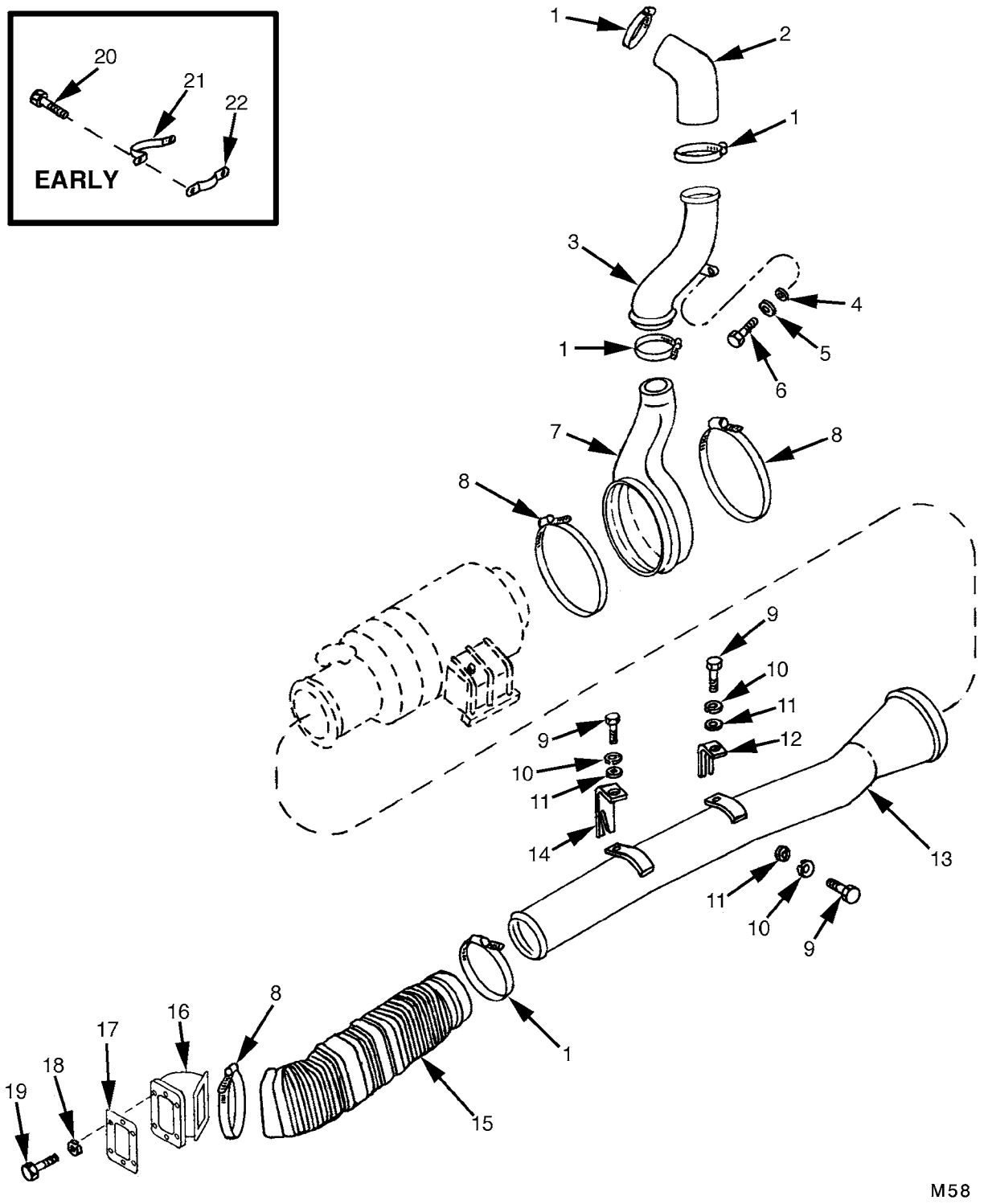

FIGURE 58. GENERATOR AIR DUCT (MODELS AVDS-1790-2DR AND AVDS-1790-2DA)

(1) ITEM NO.	(2) SMR CODE	(3) NSN	(4) CAGEC	(5) PART NUMBER	(6) DESCRIPTION AND USABLE ON CODES(UOC)	(7) QTY
					GROUP 0601: GENERATOR,ALTERNATOR	
					FIG.58 GENERATOR AIR DUCT (MODELS AVDS-1790-2DR AND AVDS-1790-2DA)	
1	PAOZZ	4730-00-908-6292	58536	A-A-52506-F-48	CLAMP,HOSE UOC:EFR,2DA	4
2	PAOZZ	4720-00-410-1180	19207	11682579	HOSE,PREFORMED UOC:EFR,2DA	1
3	PAOZZ	2990-00-411-8330	19207	10935471	PIPE,EXHAUST UOC:EFR,2DA	1
4	PAOZZ	5310-00-080-6004	96906	MS27183-14	WASHER,FLAT UOC:EFR,2DA	2
5	PAOZZ	5310-00-637-9541	96906	MS35338-46	WASHER,LOCK UOC:EFR,2DA	2
6	PAOZZ	5305-00-269-3235	80204	B1821BH038F088N	SCREW,CAP,HEXAGON H UOC:EFR,2DA	2
7	PAOZZ	2990-00-771-6969	19207	10883745	BOOT GENERATOR AIR UOC:EFR,2DA	1
8	PAOZZ	4730-00-908-6293	06481	T-218758	CLAMP,HOSE UOC:EFR,2DA	5
9	PAOZZ	5306-00-050-1238	80204	B1821BH031F075N	BOLT,MACHINE UOC:EFR,2DA	6
10	PAOZZ	5310-00-407-9566	96906	MS35338-45	WASHER,LOCK UOC:EFR,2DA	6
11	PAOZZ	5310-00-081-4219	96906	MS27183-12	WASHER,FLAT UOC:EFR,2DA	6
12	PAOZZ	5340-00-449-2580	19207	10884034	BRACKET,ANGLE UOC:EFR,2DA	1
13	PAOZZ	4710-00-063-8127	19207	10884037	TUBE,BENT,METALLIC UOC:EFR,2DA	1
14	PAOZZ	5340-00-456-1798	19207	10884033	BRACKET,ANGLE UOC:EFR,2DA	1
15	PAOZZ	4720-00-771-6968	19207	10883740	HOSE,AIR DUCT UOC:EFR,2DA	1
16	PAOZZ	4730-00-245-8162	19207	10883748	ELBOW,FLANGE TO BOS UOC:2DA	1
17	PAOZZ	5330-00-803-0259	19207	10883737	GASKET PART OF KIT P/N 5704488 UOC:2DA	1
18	PAOZZ	5310-00-582-5965	80205	MS35338-44	WASHER,LOCK UOC:2DA	6
19	PAOZZ	5305-00-068-0515	80204	B1821BH025F100N	SCREW,CAP,HEXAGON H UOC:2DA	6
20	PAOZZ	5305-01-407-9487	80204	B1821BH031F088N	SCREW,CAP,HEXAGON H	2
21	PAOZZ	5340-00-242-5601	19207	10883940	STRAP,RETAINING	1
22	PAOZZ	5340-00-453-5595	19207	10883941	STRAP,RETAINING	1

END OF FIGURE

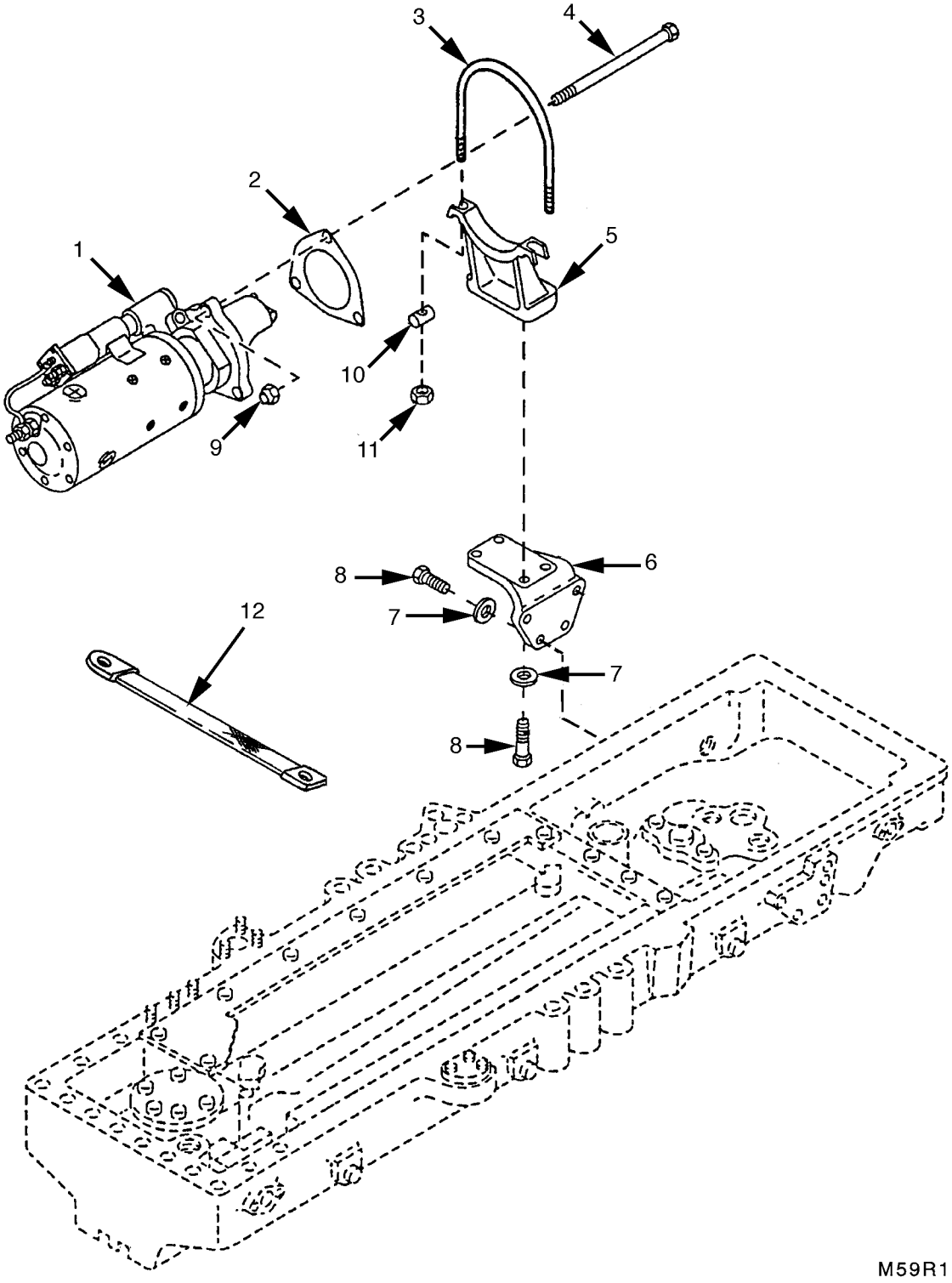

FIGURE 59. ENGINE STARTER, CRADLE, AND BRACKET

(1) ITEM NO.	(2) SMR CODE	(3) NSN	(4) CAGEC	(5) PART NUMBER	(6) DESCRIPTION AND USABLE ON CODES(UOC)	(7) QTY
					GROUP 0603: STARTING MOTOR	
					FIG.59 ENGINE STARTER, CRADLE, AND BRACKET	
1	PAOFD	2920-01-139-3722	16764	1990272	STARTER,ENGINE,ELEC (FOR COMPONENT PARTS SEE TM9-2920-232-34P,GROUP 0603).	1
2	PAOZZ	5330-00-678-7101	19207	7084278	GASKET PART OF KIT P/N 5704488	1
3	PAOZZ	5306-00-453-5589	19207	10883080	BOLT,U.	1
4	PAOZZ	5306-00-678-6889	19207	8761272	BOLT,MACHINE	2
5	PAOZZ	5342-01-147-3136	19207	12275796	BRACKET,ENGINE ACCE	1
6	PFOZZ	5340-00-402-5204	19207	10865001	BRACKET,ANGLE.	1
7	PAOZZ	5310-00-776-7318	19207	7767318	WASHER,FLAT	7
8	PAOZZ	5305-00-269-3241	80204	B1821BH038F175N	SCREW,CAP,HEXAGON H	7
9	PAOZZ	5310-00-982-6809	80205	MS21044N10	NUT,SELF-LOCKING,HE	3
10	PAOZZ	2920-00-455-5835	19207	10882765	BAR,CLAMPING,GENERA	2
11	PAOZZ	5310-00-088-0553	19207	503345	NUT,SELF-LOCKING,HE	2
12	PAOZZ	6150-01-008-1441	19207	11682595-2	LEAD,ELECTRICAL. UOC:2CA	2
12	PAOZZ	6150-01-008-1441	19207	11682595-2	LEAD,ELECTRICAL. UOC:EFR,2DA	1

END OF FIGURE

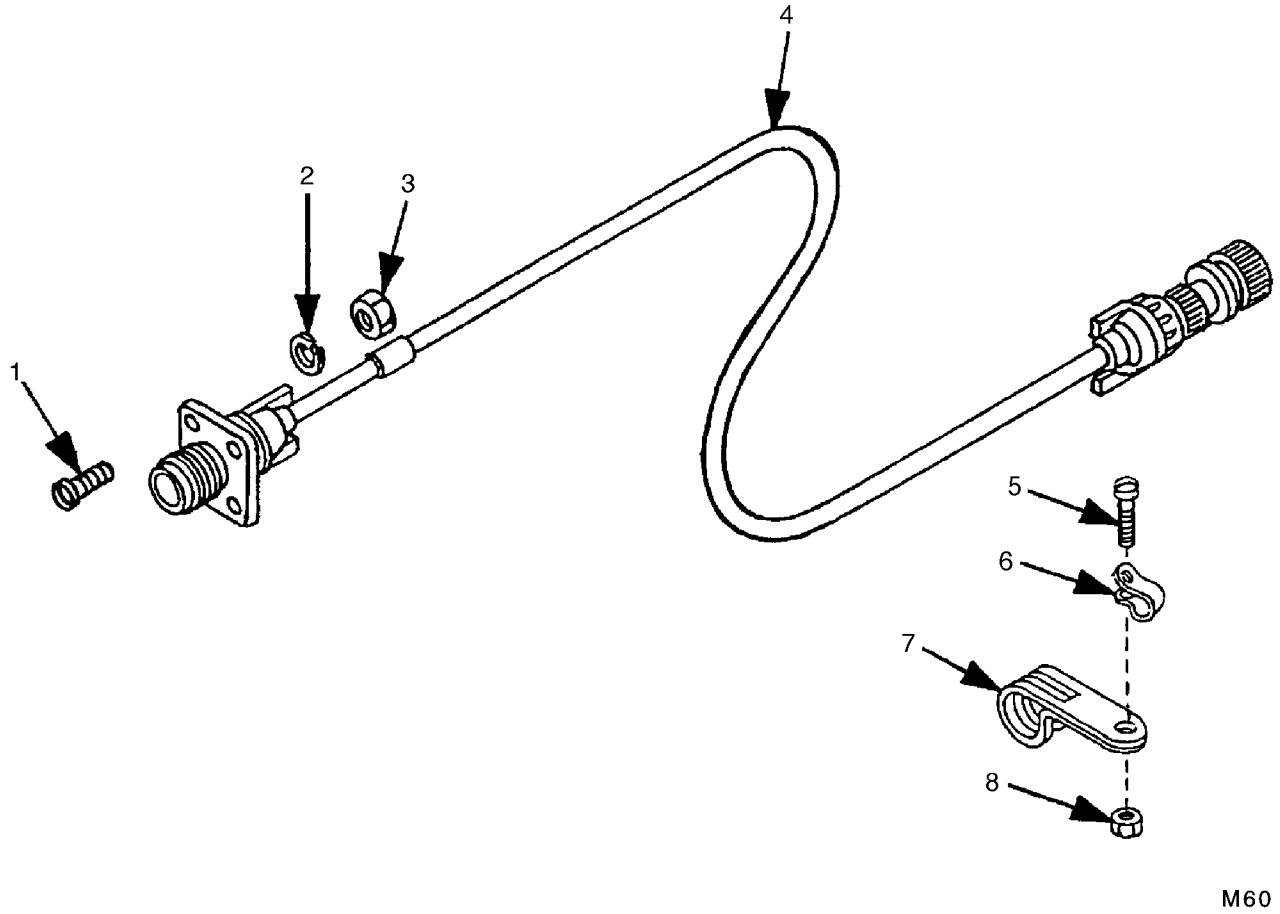

FIGURE 60. FUEL INJECT PUMP FUEL SHUT-OFF ELECTRICAL LEAD

(1) ITEM NO.	(2) SMR CODE	(3) NSN	(4) CAGEC	(5) PART NUMBER	(6) DESCRIPTION AND USABLE ON CODES(UOC)	(7) QTY
					GROUP 0606: ENGINE SAFETY CONTROLS	
					FIG.60 FUEL INJECT PUMP FUEL SHUT-OF ELECTRICAL LEAD	
1	PAOZZ	5305-00-958-4346	96906	MS35207-215	SCREW,MACHINE	4
2	PAOZZ	5310-00-616-3554	96906	MS35335-29	WASHER,LOCK	4
3	PAOZZ	5310-00-934-9734	96906	MS35650-342	NUT,PLAIN,HEXAGON	4
4	PAOZZ	5995-00-879-1666	19207	10882641	LEAD,ELECTRICAL	1
5	PAOZZ	5305-00-993-1851	96906	MS35207-267	SCREW,MACHINE	3
6	PAOZZ	5340-00-990-7610	96906	MS21333-66	CLAMP,LOOP	3
7	PAOZZ	5340-00-922-6300	96906	MS21333-77	CLAMP,LOOP	3
8	PAOZZ	5310-00-902-6676	96906	MS21083N3	NUT,SELF-LOCKING,HE	3

END OF FIGURE

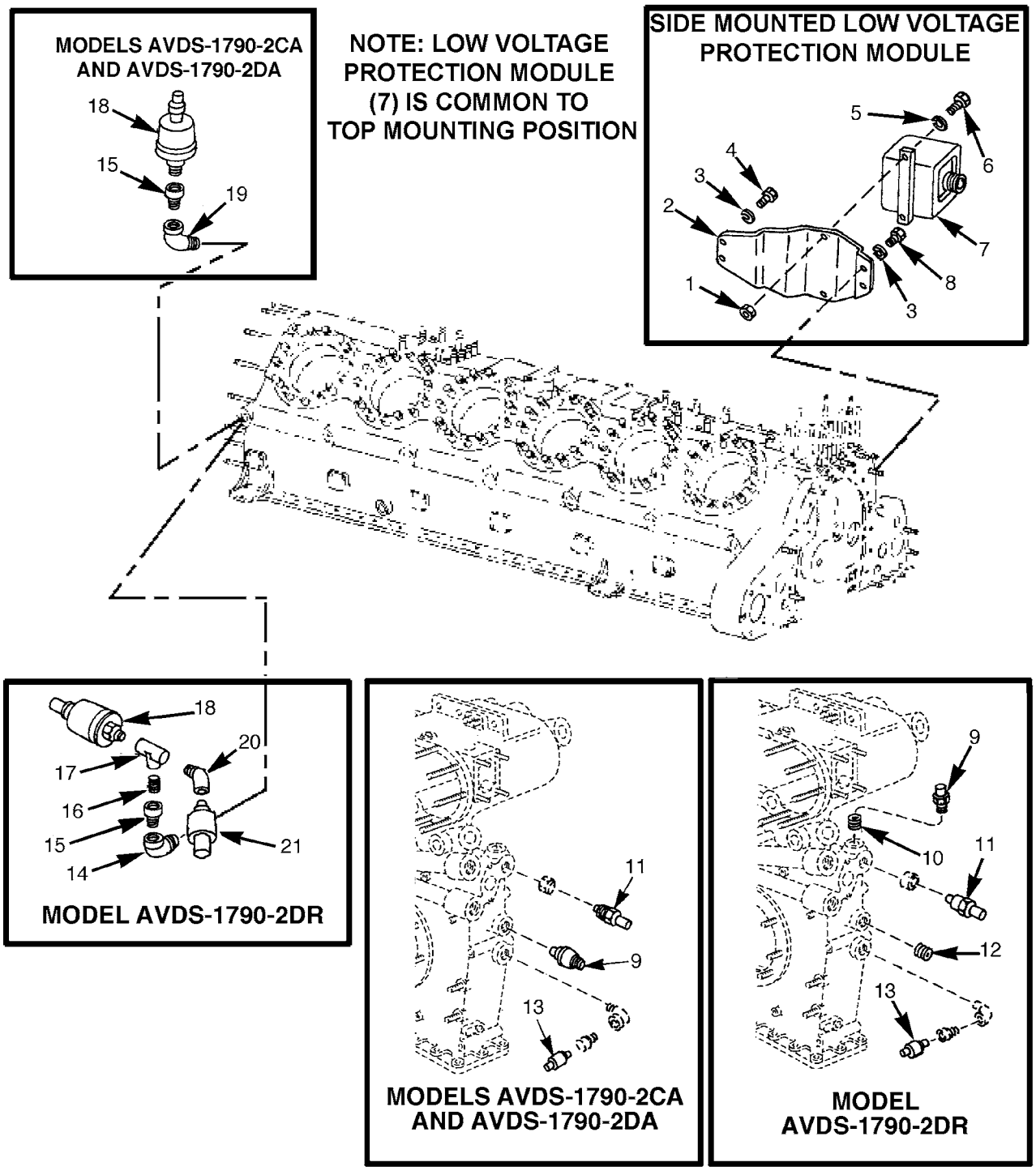

M61R1

FIGURE 61. STARTER MODULE, OIL PRESSURE AND TEMPERATURE SWITCHES, AND TRANSMITTER

(1) ITEM NO.	(2) SMR CODE	(3) NSN	(4) CAGEC	(5) PART NUMBER	(6) DESCRIPTION AND USABLE ON CODES(UOC)	(7) QTY
					GROUP 0610: SENDING UNITS AND WARNING SWITCHES	
					FIG.61 STARTER MODULE, OIL PRESSURE AND TEMPERATURE SWITCHES, AND TRANSMITTER	
1	PAOZZ	5310-00-061-7325	96906	MS21045-4	NUT,SELF-LOCKING,HE ..... UOC:EFR	2
2	PBHZZ	5342-00-397-3317	19207	11684055	BRACKET,ENGINE ACCE ..... UOC:EFR	1
3	PAHZZ	5310-00-514-6674	96906	MS35335-34	WASHER,LOCK..... UOC:EFR	4
4	PAHZZ	5306-00-050-1238	80204	B1821BH031F075N	BOLT,MACHINE ..... UOC:EFR	2
5	PAOZZ	5310-00-550-1130	96906	MS35333-40	WASHER,LOCK..... UOC:EFR	4
6	PAOZZ	5306-00-068-0513	80204	B1821BH025F075N	BOLT,MACHINE ..... UOC:EFR	2
7	PAOFF	2920-00-487-9461	81640	5X7EG1	RELAY-SOLENOID,ENGI PROTECTION MODULE	1
8	PAHZZ	5306-00-225-9089	80205	MS90726-34	BOLT,MACHINE ..... UOC:EFR	2
9	PAOZZ	5930-00-688-9882	81349	M12285/1-5	SWITCH,THERMOSTATIC ..... UOC:EFR	1
10	PAOZZ	4730-00-278-3888	81343	12-8-140140C	REDUCER,PIPE ..... UOC:EFR	1
11	PAOZZ	6685-00-814-5271	96906	MS24537-1	TRANSMITTER,TEMPERA..... UOC:EFR	1
12	PAOZZ	4730-00-044-4705	81348	WWP460	PLUG,PIPE ..... UOC:EFR	1
13	PAOZZ	5930-01-021-1559	19207	11668621	SWITCH,PRESSURE ..... UOC:EFR	1
14	PAOZZ	4730-00-253-4413	96906	MS39230-3	ELBOW,PIPE..... UOC:EFR	1
15	PAOZZ	4730-00-278-3912	15434	8169006	REDUCER,PIPE ..... UOC:EFR	1
16	PAOZZ	4730-01-104-2268	81346	A733S25CS	NIPPLE,PIPE..... UOC:EFR	1
17	PAOZZ	4730-00-541-2745	81343	AS4857J02	TEE,PIPE..... UOC:EFR	1
18	PAOZZ	6620-00-993-5546	19207	7416363	TRANSMITTER,PRESSUR..... UOC:EFR	1
19	PAOZZ	4730-00-595-1868	81336	454098	ELBOW,PIPE..... UOC:EFR	1
20	PAOZZ	4730-00-489-8216	81343	6-6140239C-PHOS	ELBOW,PIPE..... UOC:EFR	1
21	PAOZZ	5930-00-771-8119	19207	10874979	SWITCH,PRESSURE ..... UOC:EFR	1

END OF FIGURE

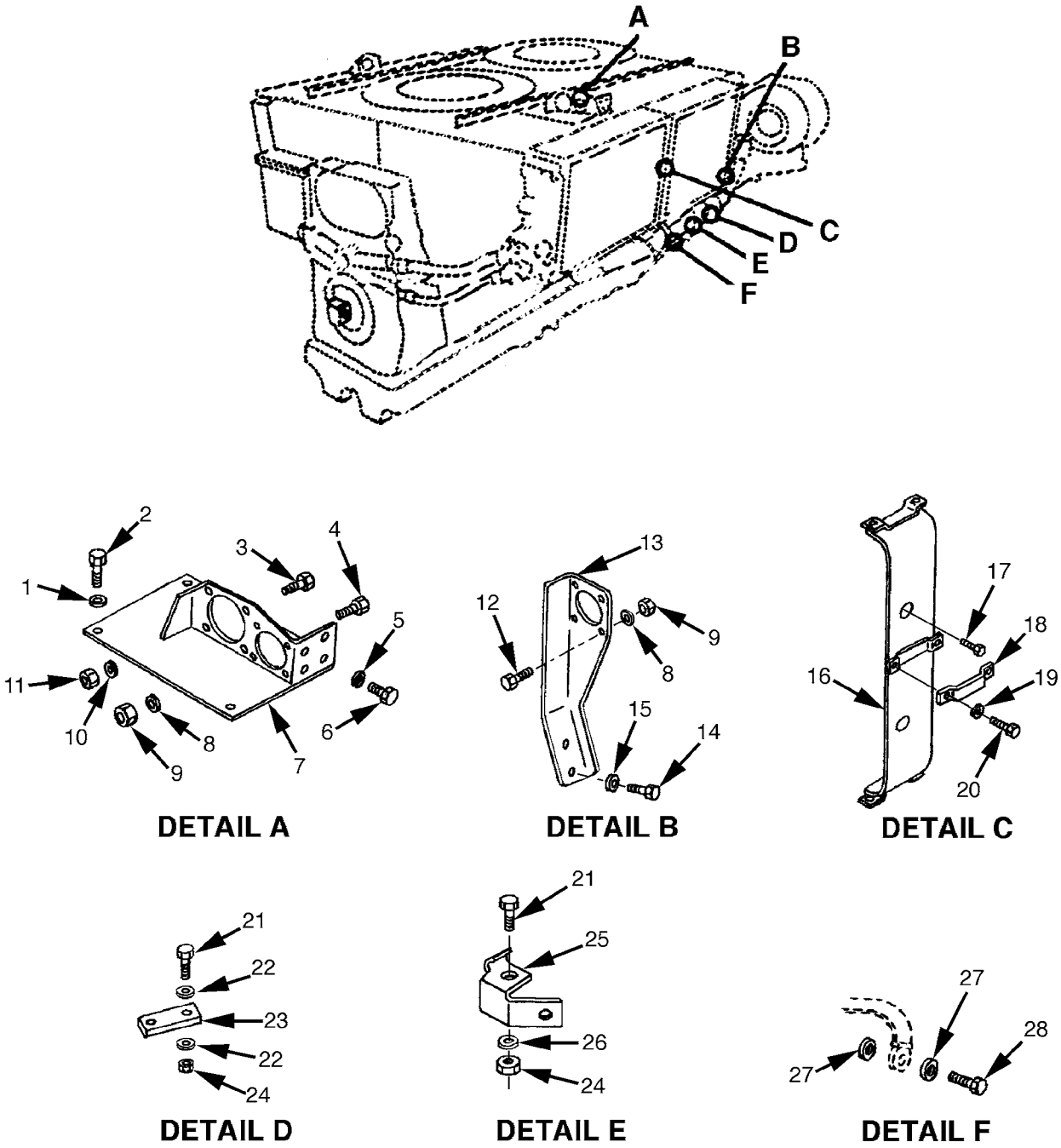

FIGURE 62. ENGINE WIRING HARNESS BRACKETS AND CLAMPS
(GENERATOR; MODELS AVDS-1790-2CA AND AVDS-1790-2DA;
SHEET 1 OF 2)

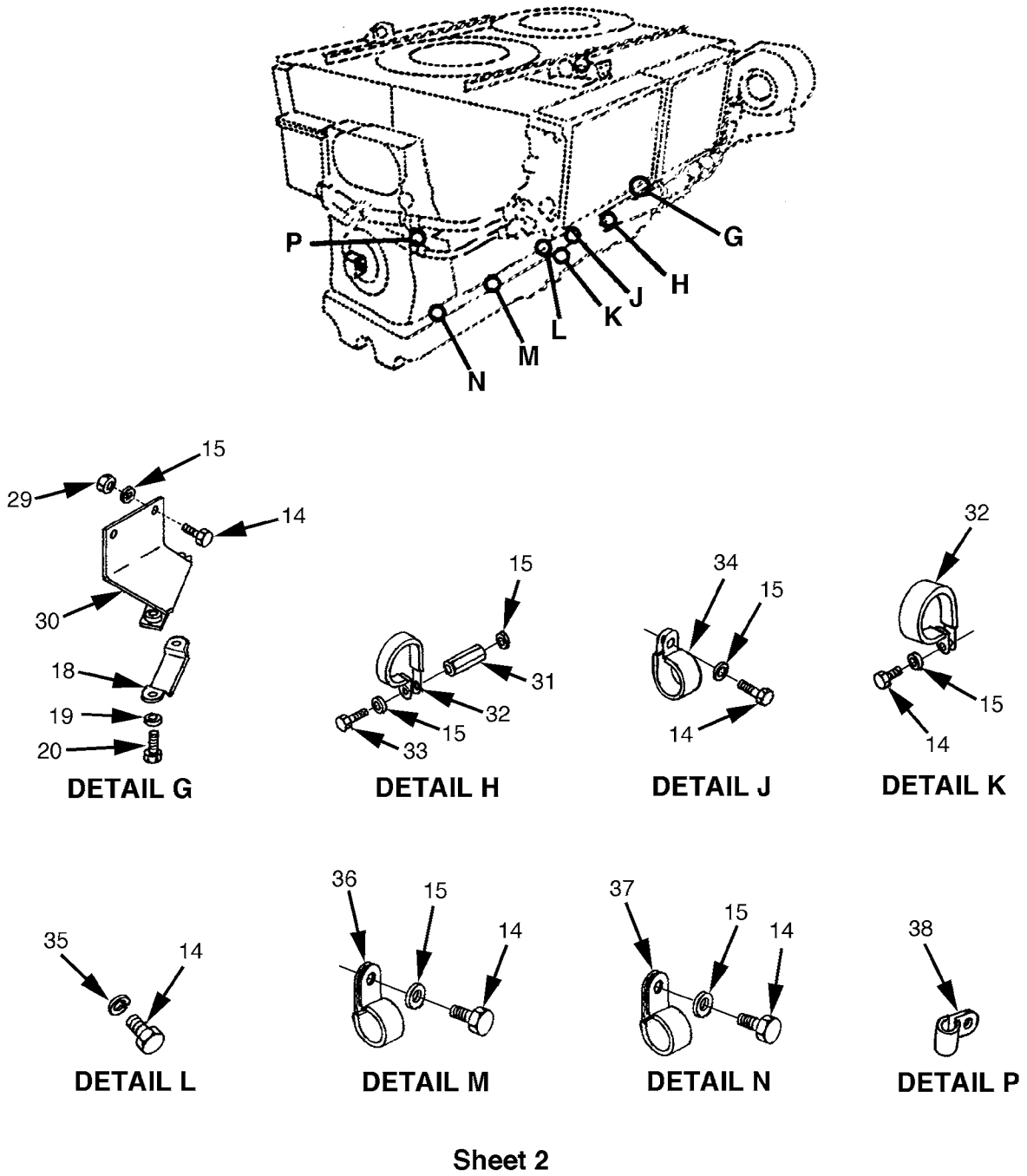

FIGURE 62. ENGINE WIRING HARNESS BRACKETS AND CLAMPS
(GENERATOR; MODELS AVDS-1790-2CA AND AVDS-1790-2DA;
SHEET 2 OF 2)

(1) ITEM NO.	(2) SMR CODE	(3) NSN	(4) CAGEC	(5) PART NUMBER	(6) DESCRIPTION AND USABLE ON CODES(UOC)	(7) QTY
					GROUP 0613: HULL OR CHASSIS WIRING HARNESS	
					FIG.62 ENGINE WIRING HARNESS BRACKETS AND CLAMPS (GENERATOR; MODELS AVDS-1790-2CA AND AVDS-1790- 2DA)	
1	PAOZZ	5310-00-514-6674	96906	MS35335-34	WASHER,LOCK UOC:2CA,2DA	3
2	PAOZZ	5305-00-225-9091	96906	MS90726-36	SCREW,CAP,HEXAGON H UOC:2CA,2DA	3
3	PAOZZ	5305-00-614-0274	96906	MS35265-63	SCREW,MACHINE UOC:2CA	4
4	PAOZZ	5305-00-543-2752	96906	MS35265-45	SCREW,MACHINE UOC:2CA,2DA	8
5	PAOZZ	5310-00-637-9541	96906	MS35338-46	WASHER,LOCK UOC:2CA,2DA	4
6	PAOZZ	5305-00-269-2803	96906	MS90726-60	SCREW,CAP,HEXAGON H UOC:2CA,2DA	4
7	PBOZZ	5340-01-290-1297	19207	12354382	BRACKET,MOUNTING UOC:2CA	1
7	PBOZZ	5340-01-287-3981	19207	12354383	BRACKET,MOUNTING UOC:2CA,2DA	1
8	PAOZZ	5310-00-933-8119	80205	MS35338-137	WASHER,LOCK UOC:2CA,2DA	12
9	PAOZZ	5310-00-934-9757	96906	MS35649-282	NUT,PLAIN,HEXAGON UOC:2CA,2DA	12
10	PAOZZ	5310-00-045-3296	80205	MS35338-43	WASHER,LOCK UOC:2CA	4
11	PAOZZ	5310-00-934-9758	96906	MS35649-202	NUT,PLAIN,HEXAGON UOC:2CA	4
12	PAOZZ	5305-00-984-6193	96906	MS35206-245	SCREW,MACHINE UOC:2CA,2DA	4
13	PBOZZ	5340-00-466-7464	01417	11673851	BRACKET,MOUNTING UOC:2CA,2DA	1
14	PAOZZ	5306-00-050-1238	80204	B1821BH031F075N	BOLT,MACHINE UOC:2CA,2DA	10
15	PAOZZ	5310-00-407-9566	96906	MS35338-45	WASHER,LOCK UOC:2CA,2DA	11
16	PBOZZ	5340-00-397-3283	19207	11673852	BRACKET,MOUNTING UOC:2CA,2DA	1
17	PAOZZ	5305-00-042-5592	24617	425592	SCREW,ASSEMBLED WAS UOC:2CA,2DA	2
18	PAOZZ	5340-01-030-8726	19207	11684276-1	STRAP,RETAINING UOC:2CA,2DA	4
19	PAOZZ	5310-00-582-5965	80205	MS35338-44	WASHER,LOCK UOC:2CA,2DA	8
20	PAOZZ	5305-00-068-0500	96906	MS90725-3	SCREW,CAP,HEXAGON H UOC:2CA,2DA	8
21	PAOZZ	5305-00-068-0511	80204	B1821BH038C125N	SCREW,CAP,HEXAGON H UOC:2CA	2
22	PAOZZ	5310-00-061-1258	96906	MS45904-76	WASHER,LOCK UOC:2CA	2
23	PAOZZ	6150-00-476-0371	19207	11673856	BUS,CONDUCTOR UOC:2CA	1
24	PAOZZ	5310-00-732-0558	96906	MS51967-8	NUT,PLAIN,HEXAGON UOC:2CA	2
25	PAOZZ	6150-00-476-0381	19207	11673850	BUS,CONDUCTOR UOC:2CA	1
26	PAOZZ	5310-00-637-9541	12603	23E06	WASHER,LOCK UOC:2CA	1
27	PAOZZ	5310-00-776-7318	19207	7767318	WASHER,FLAT UOC:2CA,2DA	4

(1) ITEM NO.	(2) SMR CODE	(3) NSN	(4) CAGEC	(5) PART NUMBER	(6) DESCRIPTION AND USABLE ON CODES(UOC)	(7) QTY
28	PAOZZ	5305-00-269-3241	80204	B1821BH038F175N	SCREW,CAP,HEXAGON H UOC:2CA	2
29	PAOZZ	5310-00-088-0553	96906	MS21044N5	NUT,SELF-LOCKING,HE UOC:2CA,2DA	2
30	PBOZZ	5342-00-394-9701	19207	11673853	BRACKET,ENGINE ACCE UOC:2CA,2DA	1
31	PAOZZ	5340-01-081-1686	19207	12254369	POST,ELECTRICAL-MEC UOC:2CA,2DA	1
32	PAOZZ	5340-00-178-6077	19207	7057332-3	CLAMP,LOOP UOC:2CA,2DA	3
33	PAOZZ	5306-00-225-9088	96906	MS90726-33	BOLT,MACHINE UOC:2CA,2DA	1
34	PAOZZ	5340-00-959-8422	19207	10863816	CLAMP,LOOP UOC:2CA	2
35	PAOZZ	5310-00-167-0721	96906	MS35333-41	WASHER,LOCK UOC:2CA,2DA	4
36	PAOZZ	5340-00-988-1162	96906	MS21333-113	CLAMP,LOOP UOC:2CA,2DA	2
37	PAOZZ	5340-00-057-3043	96906	MS21333-112	CLAMP,LOOP UOC:2CA,2DA	1
38	PAOZZ	5340-00-057-3034	96906	MS21333-110	CLAMP,LOOP UOC:2CA	1

END OF FIGURE

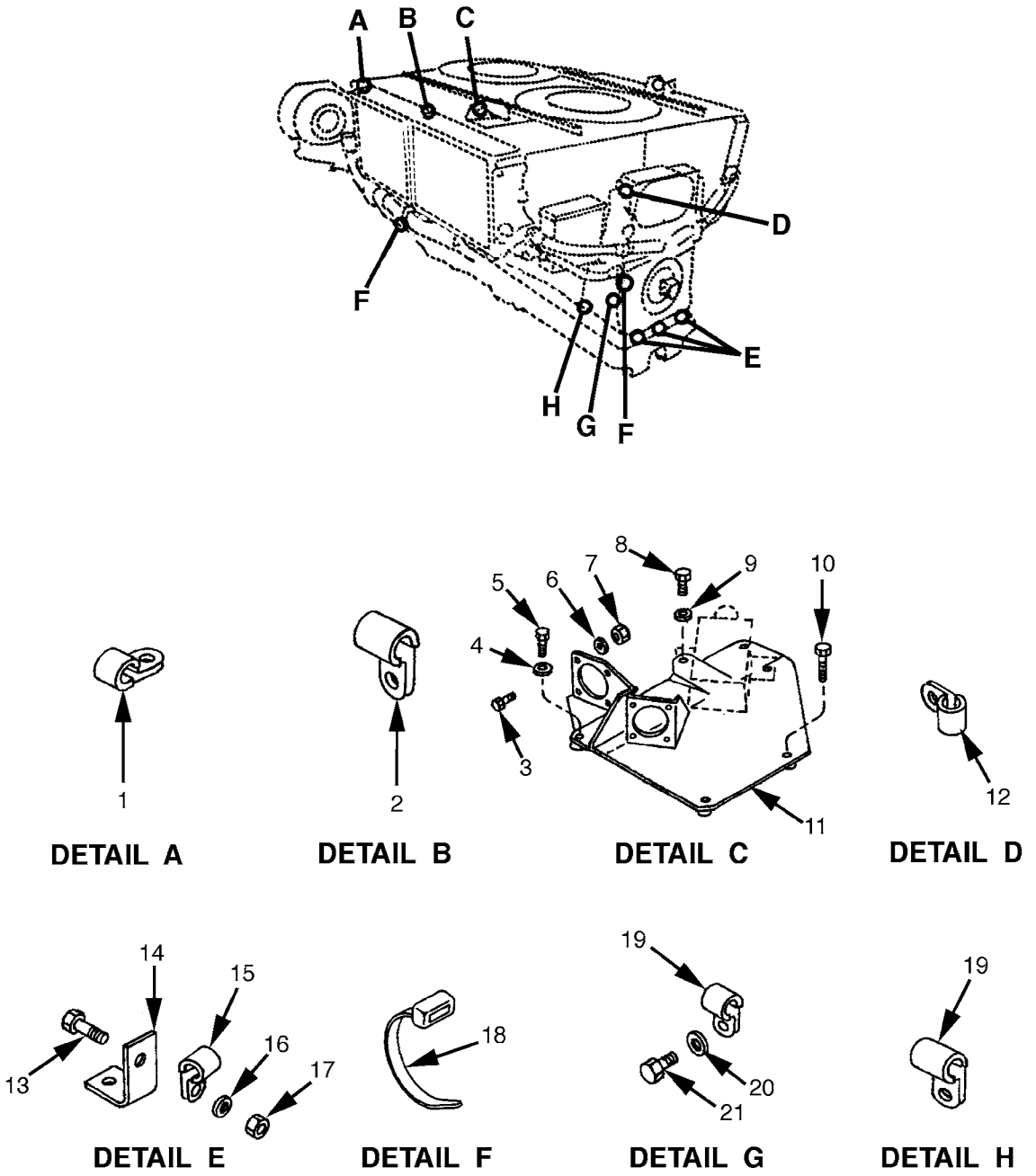

FIGURE 63. ENGINE WIRING HARNESS BRACKETS AND CLAMPS
(STARTER; MODELS AVDS-1790-2CA AND AVDS-1790-2DA;
SHEET 1 OF 2)

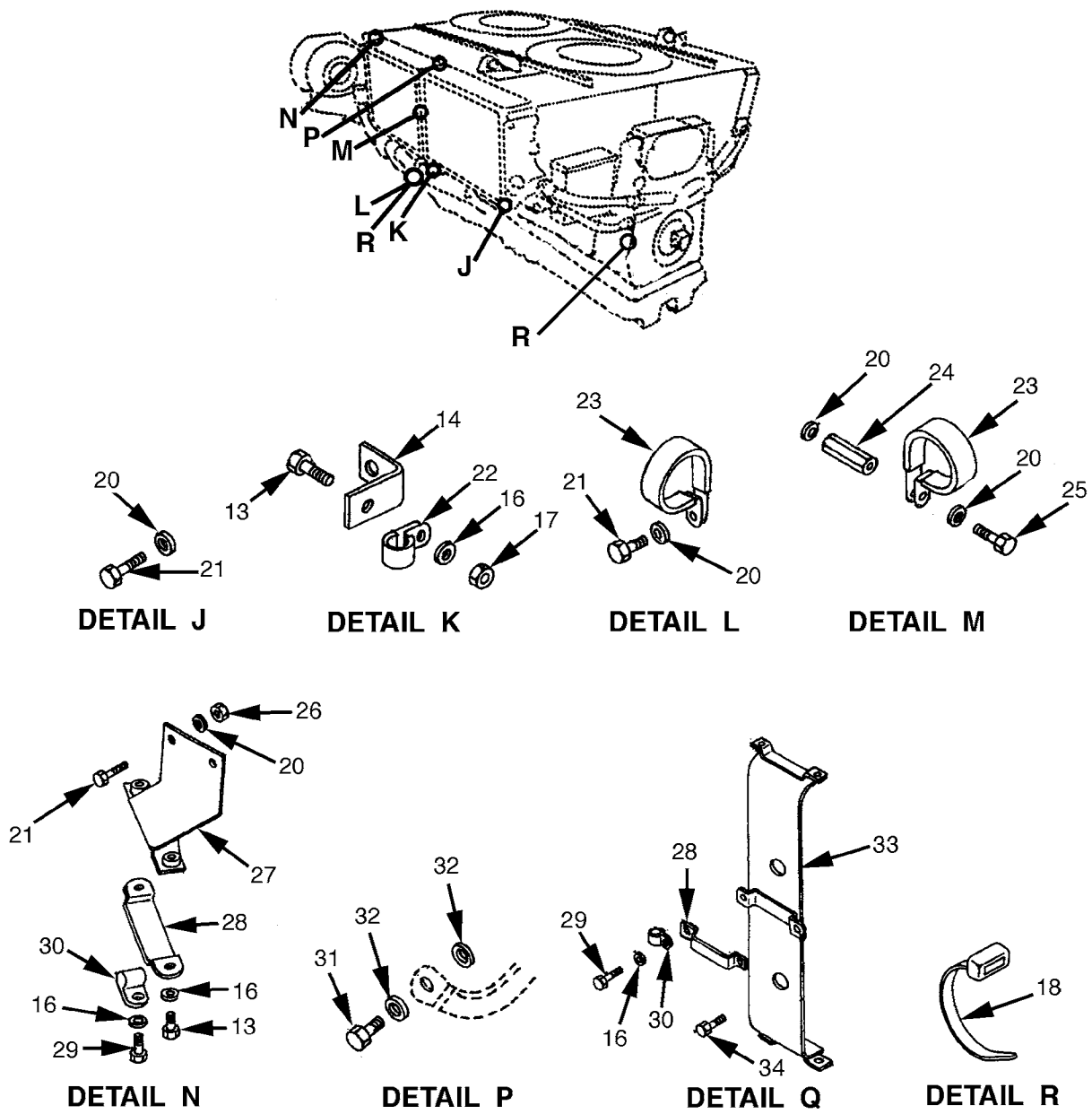

Sheet 2 of 2

M63B

FIGURE 63. ENGINE WIRING HARNESS BRACKETS AND CLAMPS
(STARTER; MODELS AVDS-1790-2CA AND AVDS-1790-2DA;
SHEET 2 OF 2)

(1) ITEM NO.	(2) SMR CODE	(3) NSN	(4) CAGEC	(5) PART NUMBER	(6) DESCRIPTION AND USABLE ON CODES(UOC)	(7) QTY
					GROUP 0613: HULL OR CHASSIS WIRING HARNESS	
					FIG.63 ENGINE WIRING HARNESS BRACKETS AND CLAMPS (STARTER;MODELS AVDS-1790-2CA AND AVDS-1790-2DA)	
1	PAOZZ	5340-00-057-3034	96906	MS21333-110	CLAMP,LOOP UOC:2CA	1
2	PAOZZ	5340-00-067-3868	96906	MS21333-109	CLAMP,LOOP UOC:2CA,2DA	6
3	PAOZZ	5305-00-614-0274	96906	MS35265-63	SCREW,MACHINE UOC:2CA,2DA	8
4	PAOZZ	5310-00-514-6674	96906	MS35335-34	WASHER,LOCK UOC:2CA,2DA	3
5	PAOZZ	5306-00-051-4077	80204	B1821BH031F113N	BOLT,MACHINE UOC:2CA,2DA	3
6	PAOZZ	5310-00-045-3296	80205	MS35338-43	WASHER,LOCK UOC:2CA,2DA	8
7	PAOZZ	5310-00-934-9758	96906	MS35649-202	NUT,PLAIN,HEXAGON UOC:2CA,2DA	8
8	PAOZZ	5305-00-267-8952	80204	B1821BH025F050N	SCREW,CAP,HEXAGON H UOC:2CA,2DA	2
9	PAOZZ	5310-00-550-1130	96906	MS35333-40	WASHER,LOCK UOC:2CA,2DA	2
10	PAOZZ	5305-00-993-1206	96906	MS24668-22	SCREW,CAP,SOCKET HE UOC:2CA,2DA	2
11	PAOZZ	2920-01-065-2016	19207	12254374	BRACKET,MOUNTING,MO UOC:2CA,2DA	1
12	PAOZZ	5340-00-057-3029	96906	MS21333-118	CLAMP,LOOP UOC:2CA,2DA	1
13	PAOZZ	5305-00-068-0500	96906	MS90725-3	SCREW,CAP,HEXAGON H UOC:2CA,2DA	8
14	PAOZZ	5340-00-107-4286	19207	10863598	BRACKET,ANGLE UOC:2CA,2DA	4
15	PAOZZ	5340-00-984-8540	96906	MS21333-102	CLAMP,LOOP UOC:2CA,2DA	3
16	PAOZZ	5310-00-582-5965	80205	MS35338-44	WASHER,LOCK UOC:2CA,2DA	12
17	PAOZZ	5310-00-761-6882	96906	MS51967-2	NUT,PLAIN,HEXAGON UOC:2CA,2DA	4
18	PAOZZ	5975-00-074-2072	81343	MS3367-1-9	STRAP,TIEDOWN,ELECT UOC:2DA	2
19	PAOZZ	5340-00-057-3043	96906	MS21333-112	CLAMP,LOOP UOC:2CA,2DA	2
20	PAOZZ	5310-00-407-9566	96906	MS35338-45	WASHER,LOCK UOC:2CA,2DA	7
21	PAOZZ		80204	B1821BH031075N	BOLT,MACHINE UOC:2CA,2DA	6
22	PAOZZ	5340-00-057-3037	96906	MS21333-111	CLAMP,LOOP UOC:2CA,2DA	1
23	PAOZZ	5340-01-077-1501	19207	8338503	CLAMP,LOOP UOC:2CA,2DA	3
24	PAOZZ	5340-01-081-1686	19207	12254369	POST,ELECTRICAL-MEC UOC:2CA,2DA	1
25	PAOZZ	5306-00-225-9088	96906	MS90726-33	BOLT,MACHINE UOC:2CA,2DA	1
26	PAOZZ	5310-00-088-0553	96906	MS21044N5	NUT,SELF-LOCKING,HE UOC:2CA,2DA	2
27	PAOZZ	5342-00-394-9690	19207	11673854	BRACKET,ENGINE ACCE LEFT BANK UOC:2CA,2DA	1
28	PAOZZ	5340-01-030-6928	19207	11684276-2	STRAP,RETAINING UOC:2CA,2DA	4

(1) ITEM NO.	(2) SMR CODE	(3) NSN	(4) CAGEC	(5) PART NUMBER	(6) DESCRIPTION AND USABLE ON CODES(UOC)	(7) QTY
29	PAOZZ	5305-00-225-3844	80204	B1821BH025C056N	SCREW,CAP,HEXAGON H UOC:2CA,2DA	4
30	PAOZZ	5340-00-088-1254	96906	MS21333-104	CLAMP,LOOP UOC:2CA,2DA	4
31	PAOZZ	5305-00-269-3241	80204	B1821BH038F175N	SCREW,CAP,HEXAGON H UOC:2CA,2DA	1
32	PAOZZ	5310-00-776-7318	19207	7767318	WASHER,FLAT UOC:2CA,2DA	2
33	PAOZZ	5340-00-475-8216	19207	11673855	BRACKET,MOUNTING UOC:2CA,2DA	1
34	PAOZZ	5306-00-050-1238	80204	B1821BH031F075N	BOLT,MACHINE UOC:2CA,2DA	2

END OF FIGURE

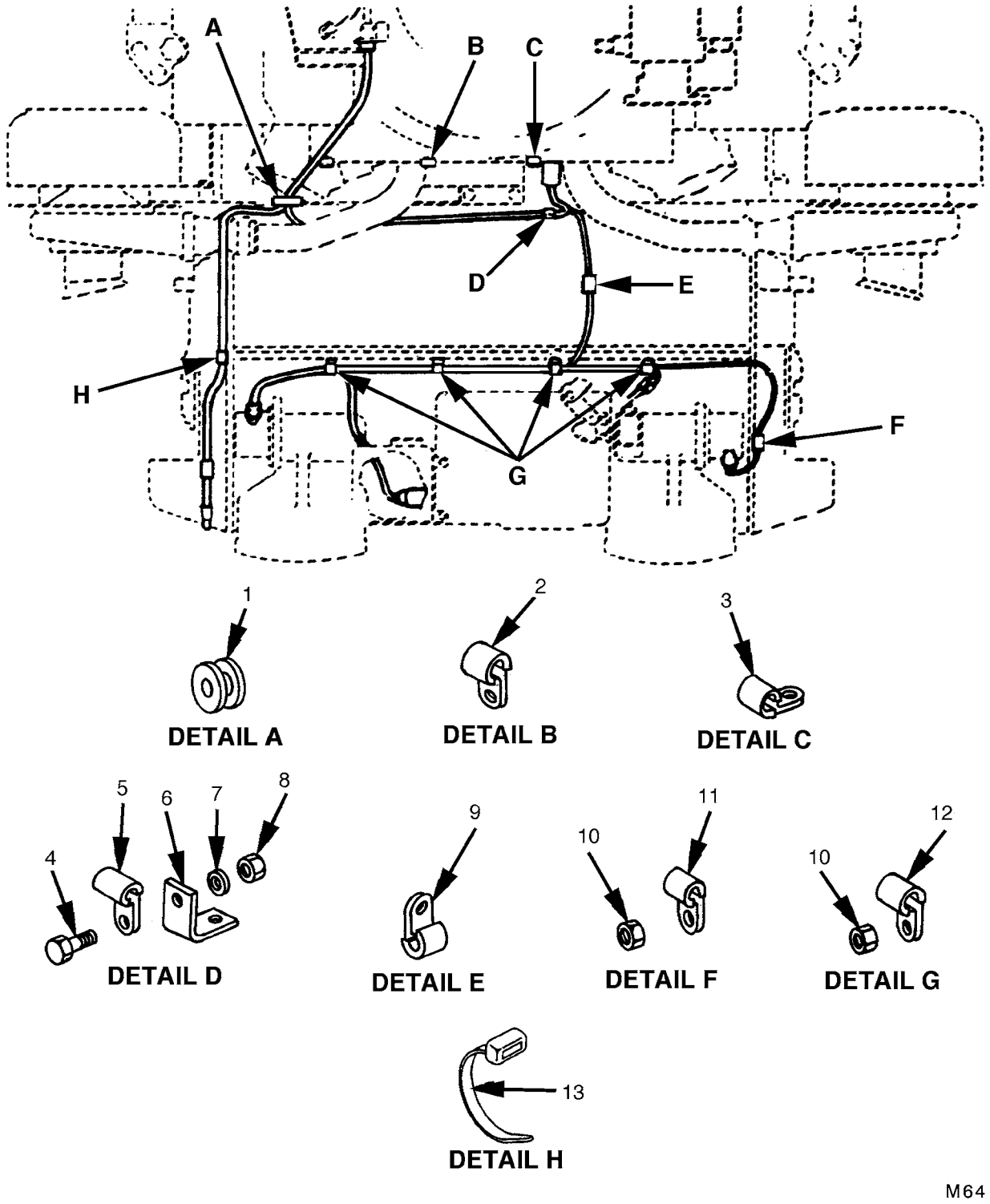

FIGURE 64. ENGINE WIRING HARNESS BRACKETS AND CLAMPS (TRANSMISSION; MODELS AVDS-1790-2CA AND AVDS-1790-2DA)

(1) ITEM NO.	(2) SMR CODE	(3) NSN	(4) CAGEC	(5) PART NUMBER	(6) DESCRIPTION AND USABLE ON CODES(UOC)	(7) QTY
					GROUP 0613: HULL OR CHASSIS WIRING HARNESS	
					FIG.64 ENGINE WIRING HARNESS BRACKETS AND CLAMPS (TRANSMISSION; MODELS AVDS-1790-2CA AND AVDS-1790-2DA)	
1	PAOZZ	5325-00-290-1960	96906	MS35489-27	GROMMET,NONMETALLIC UOC:2CA,2DA	1
2	PAOZZ	5340-00-809-1490	96906	MS21333-98	CLAMP,LOOP UOC:2CA	1
3	PAOZZ	5340-00-057-3025	96906	MS21333-108	CLAMP,LOOP UOC:2CA,2DA	2
4	PAOZZ	5305-00-068-0500	96906	MS90725-3	SCREW,CAP,HEXAGON H UOC:2CA,2DA	1
5	PAOZZ	5340-00-984-8540	96906	MS21333-102	CLAMP,LOOP UOC:2CA,2DA	1
6	PAOZZ	5340-00-107-4286	19207	10863598	BRACKET,ANGLE UOC:2CA,2DA	1
7	PAOZZ	5310-00-582-5965	80205	MS35338-44	WASHER,LOCK. UOC:2CA,2DA	1
8	PAOZZ	5310-00-761-6882	96906	MS51967-2	NUT,PLAIN,HEXAGON UOC:2CA,2DA	1
9	PAOZZ	5340-00-833-8476	96906	MS21333-122	CLAMP,LOOP UOC:2CA,2DA	1
10	PAOZZ	5310-00-489-5663	96906	MS27151-24	NUT,STAMPED UOC:2CA,2DA	5
11	PAOZZ	5340-00-735-1617	19207	7351617	CLAMP,LOOP UOC:2CA,2DA	2
12	PAOZZ	5340-00-281-4425	19207	7351807	CLAMP,LOOP UOC:2CA,2DA	4
13	PAOZZ	5975-00-074-2072	81343	MS3367-1-9	STRAP,TIEDOWN,ELECT UOC:2CA,2DA	1

END OF FIGURE

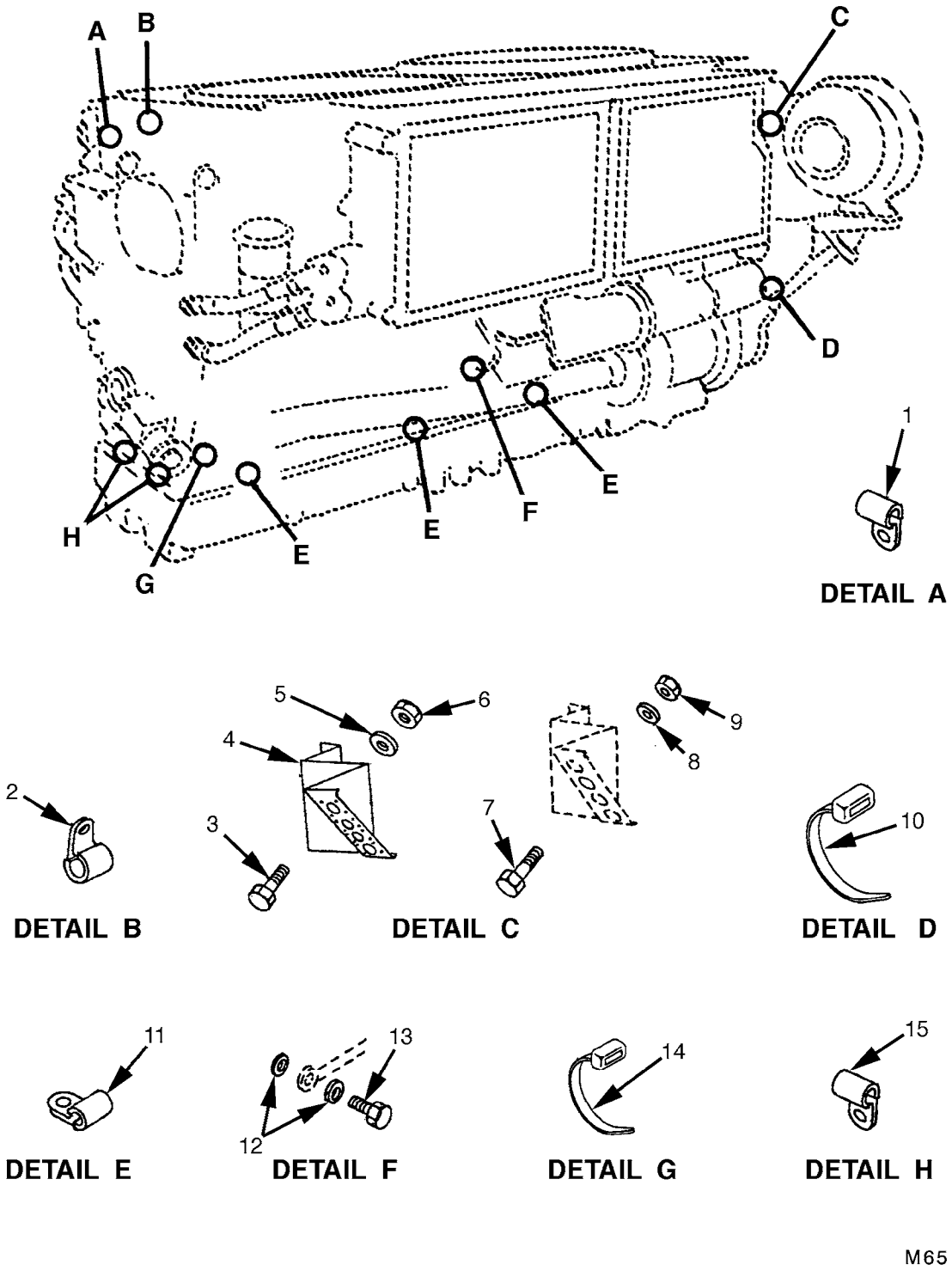

FIGURE 65. ENGINE WIRING HARNESS BRACKETS AND CLAMPS
(MODEL AVDS-1790-2DR)

(1) ITEM NO.	(2) SMR CODE	(3) NSN	(4) CAGEC	(5) PART NUMBER	(6) DESCRIPTION AND USABLE ON CODES(UOC)	(7) QTY
					GROUP 0613: HULL OR CHASSIS WIRING HARNESS	
					FIG.65 ENGINE WIRING HARNESS BRACKETS AND CLAMPS (MODEL AVDS-1790-2DR)	
1	PAOZZ	5340-00-067-3868	96906	MS21333-109	CLAMP,LOOP . . . . . UOC:EFR	1
2	PAOZZ	5340-00-057-3034	96906	MS21333-110	CLAMP,LOOP . . . . . UOC:EFR	1
3	PAOZZ	5305-00-622-9476	96906	MS35265-46	SCREW,MACHINE . . . . . UOC:EFR	8
4	PBOZZ	5342-01-241-9446	19207	11671981	BRACKET,ENGINE ACCE . . . . . UOC:EFR	1
5	PAOZZ	5310-00-933-8119	80205	MS35338-137	WASHER,LOCK. . . . . UOC:EFR	8
6	PAOZZ	5310-00-934-9757	96906	MS35649-282	NUT,PLAIN,HEXAGON . . . . . UOC:EFR	8
7	PAOZZ	5305-00-614-0245	96906	MS35265-64	SCREW,MACHINE . . . . . UOC:EFR	8
8	PAOZZ	5310-00-045-3296	80205	MS35338-43	WASHER,LOCK. . . . . UOC:EFR	8
9	PAOZZ	5310-00-934-9758	96906	MS35649-202	NUT,PLAIN,HEXAGON . . . . . UOC:EFR	8
10	PAOZZ	5975-00-985-6630	96906	MS3367-3-0	STRAP,TIEDOWN,ELECT . . . . . UOC:EFR	1
11	PAOZZ	5340-00-833-3049	96906	MS21333-127	CLAMP,LOOP . . . . . UOC:EFR	3
12	PAOZZ	5310-00-167-0721	96906	MS35333-41	WASHER,LOCK. . . . . UOC:EFR	4
13	PAOZZ	5306-00-050-1238	80204	B1821BH031F075N	BOLT,MACHINE . . . . . UOC:EFR	2
14	PAOZZ	5975-00-074-2072	81343	MS3367-1-9	STRAP,TIEDOWN,ELECT . . . . . UOC:EFR	1
15	PAOZZ	5340-00-725-5280	80205	NASM12333	CLAMP,LOOP . . . . . UOC:EFR	2

END OF FIGURE

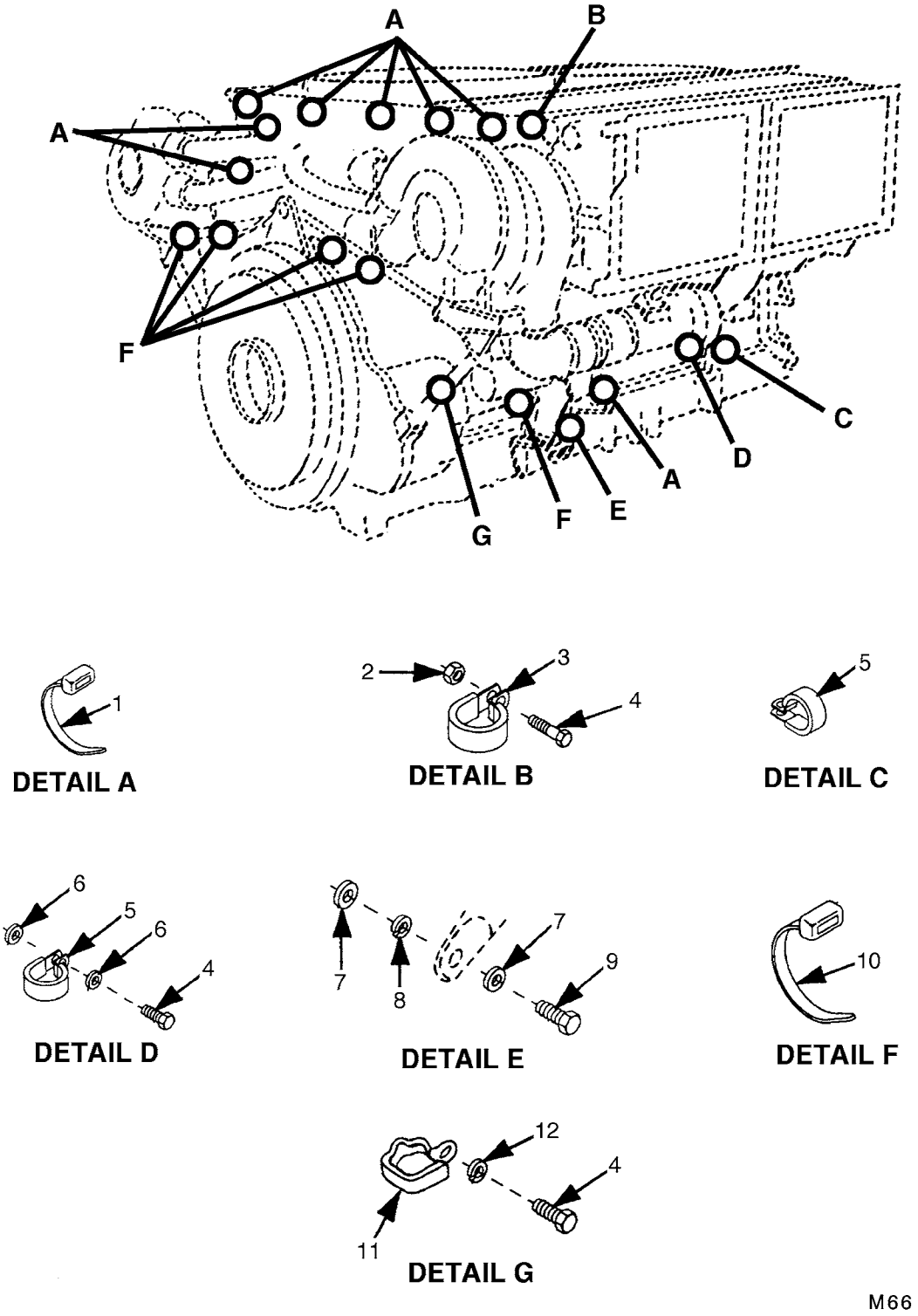

FIGURE 66. ENGINE WIRING HARNESS CLAMPS
(MODEL AVDS-1790-2DR)

(1) ITEM NO.	(2) SMR CODE	(3) NSN	(4) CAGEC	(5) PART NUMBER	(6) DESCRIPTION AND USABLE ON CODES(UOC)	(7) QTY
					GROUP 0613: HULL OR CHASSIS WIRING HARNESS	
					FIG.66 ENGINE WIRING HARNESS CLAMPS (MODEL AVDS-1790-2DR)	
1	PAOZZ	5975-00-074-2072	81343	MS3367-1-9	STRAP,TIEDOWN,ELECT ..... UOC:EFR	10
2	PAOZZ	5310-00-088-0553	80205	MS21044N5	NUT,SELF-LOCKING,HE ..... UOC:EFR	1
3	PAOZZ	5340-00-057-3025	96906	MS21333-108	CLAMP,LOOP ..... UOC:EFR	2
4	PAOZZ	5306-00-050-1238	80204	B1821BH031F075N	BOLT,MACHINE ..... UOC:EFR	5
5	PAOZZ	5340-00-964-5267	96906	MS21333-120	CLAMP,LOOP ..... UOC:EFR	2
6	PAOZZ	5310-00-167-0721	96906	MS35333-41	WASHER,LOCK..... UOC:EFR	2
7	PAOZZ	5310-00-776-7318	19207	7767318	WASHER,FLAT ..... UOC:EFR	2
8	PAOZZ	5310-00-061-1258	96906	MS45904-76	WASHER,LOCK..... UOC:EFR	1
9	PAOZZ	5305-00-914-6131	80204	B1821BH038F175D	SCREW,CAP,HEXAGON H ..... UOC:EFR	1
10	PAOZZ	5975-00-985-6630	96906	MS3367-3-0	STRAP,TIEDOWN,ELECT ..... UOC:EFR	2
11	PAOZZ	5340-00-959-8422	19207	10863816	CLAMP,LOOP ..... UOC:EFR	1
12	PAOZZ	5310-00-407-9566	96906	MS35338-45	WASHER,LOCK..... UOC:EFR	1

END OF FIGURE

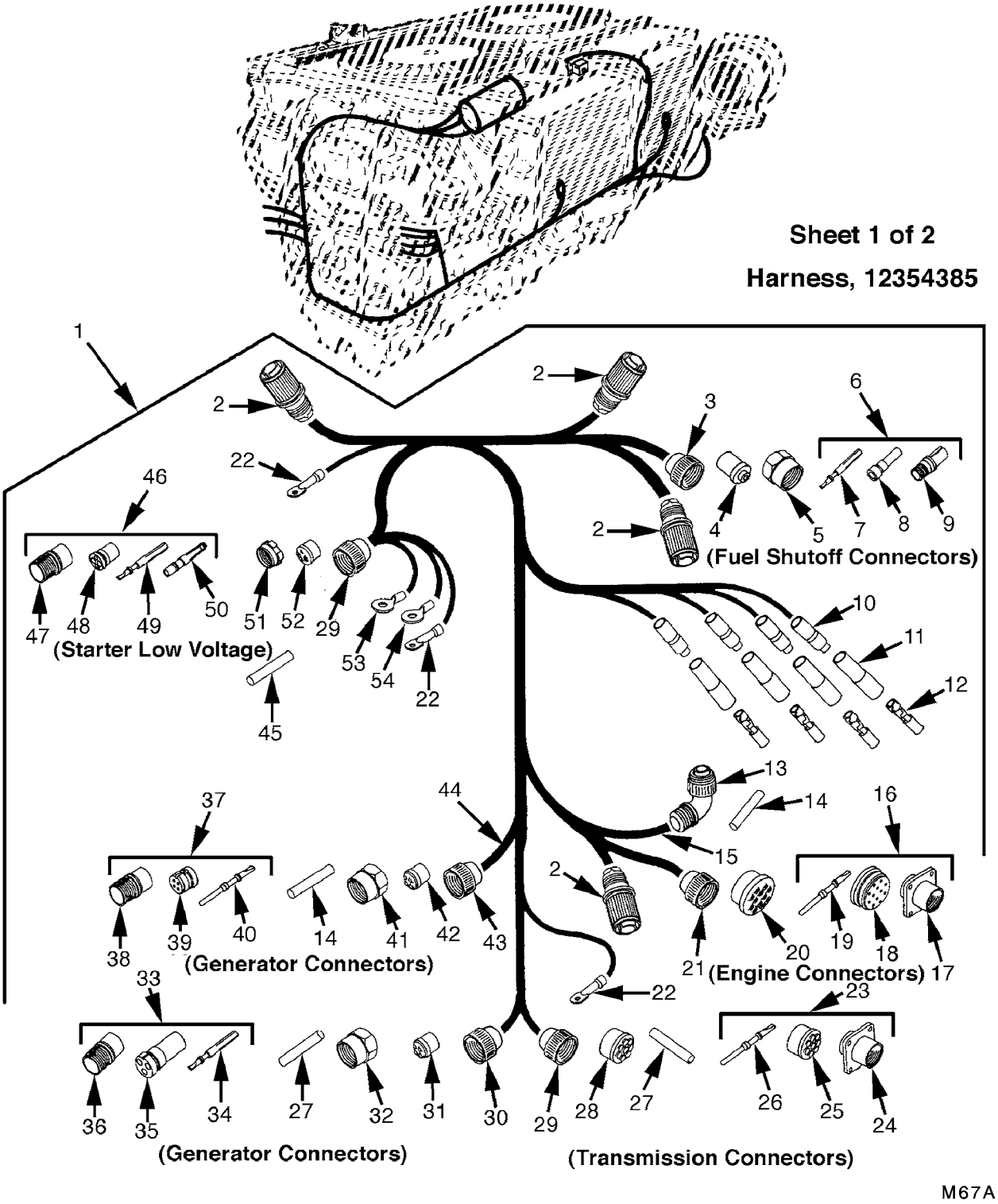

FIGURE 67. ENGINE WIRING HARNESS CONNECTORS AND TERMINALS
(MODEL AVDS-1790-2CA; SHEET 1 OF 2)

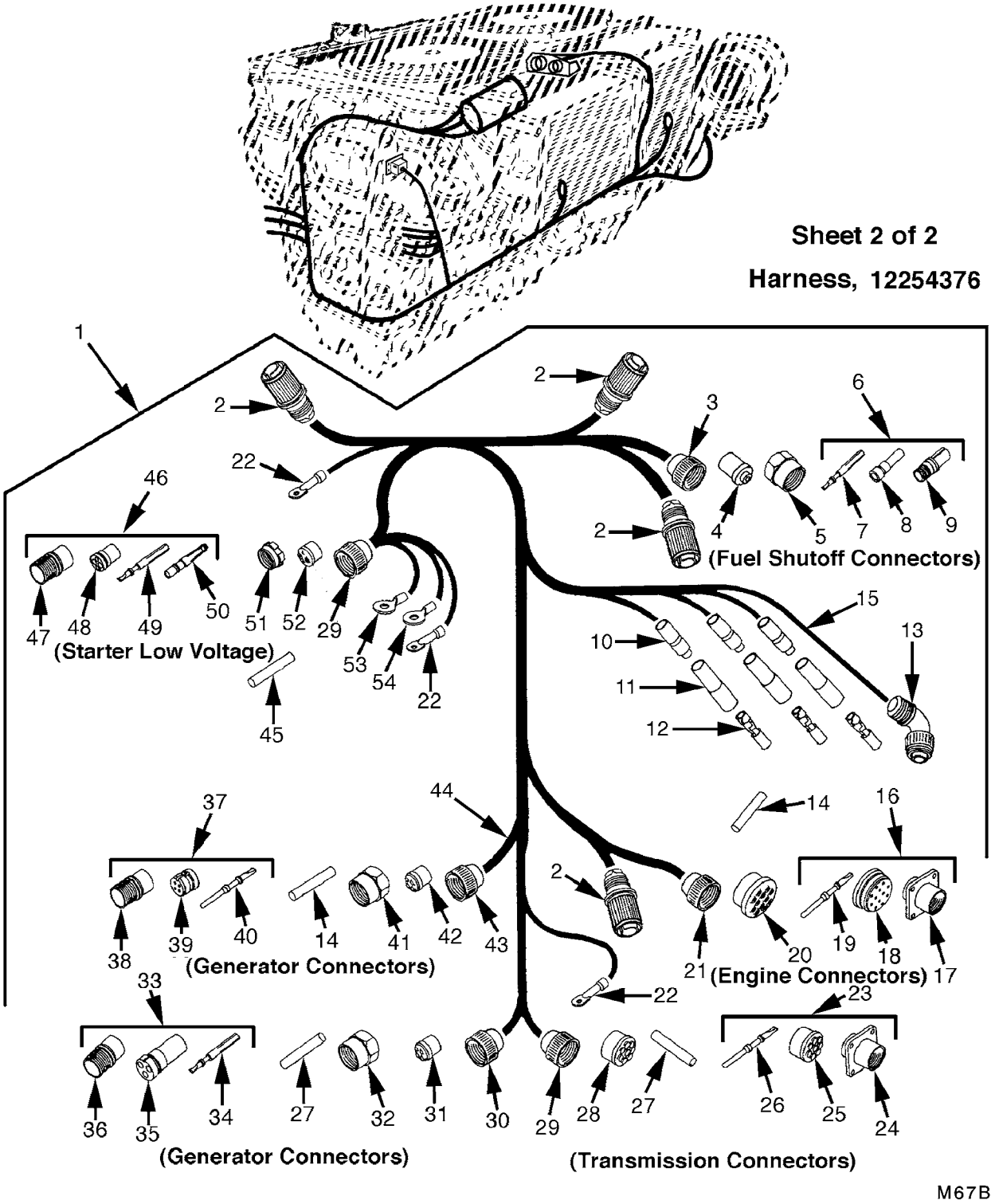

FIGURE 67. ENGINE WIRING HARNESS CONNECTORS AND TERMINALS
(MODEL AVDS-1790-2CA; SHEET 2 OF 2)

(1) ITEM NO.	(2) SMR CODE	(3) NSN	(4) CAGEC	(5) PART NUMBER	(6) DESCRIPTION AND USABLE ON CODES(UOC)	(7) QTY
					GROUP 0613: HULL OR CHASSIS WIRING HARNESS	
					FIG.67 ENGINE WIRING HARNESS CONNECTORS AND TERMINALS (MODEL AVDS-1790-2CA)	
1	PAOOO	6150-01-065-6631	19207	12254376	WIRING HARNESS,BRAN (USE WITH STARTER RELAY SOLENOID AND TIME TOTALIZING METER). UOC:2CA	1
1	PAOOO	5995-01-290-1300	19207	12354385	WIRING HARNESS,BRAN (USE WITH STARTER RELAY SOLENOID ONLY) UOC:2CA	1
2	PAOZZ	5935-00-509-6194	96906	MS3456W10SL-4S	.CONNECTOR,PLUG,ELEC UOC:2CA	4
3	PAOZZ	5935-00-333-3088	19207	7723306	.NUT,BUSHING RETAINE UOC:2CA	1
4	PAOZZ	5365-00-772-2343	19207	7722343	.BUSHING,NONMETALLIC. UOC:2CA	1
5	PAOZZ	5975-00-522-7125	77820	10-40457-12S	.NUT,COUPLING,ELECTR UOC:2CA	1
6	PAOOO	5935-00-686-2610	19207	8724199	.CONNECTOR,PLUG,ELEC UOC:2CA	1
7	PAOZZ	6150-00-651-4079	19207	7383560	..CONTACT,ELECTRICAL UOC:2CA	1
8	PAOZZ	5935-00-614-9136	19207	8720680	..INSERT,ELECTRICAL C UOC:2CA	1
9	PAOZZ	5935-01-013-7520	19207	8344522	..SHELL,ELECTRICAL CO UOC:2CA	1
10	PAOZZ	5940-00-399-6676	19207	8338564	.TERMINAL SET,QUICK. UOC:2CA	4
11	PAOZZ	5935-00-534-7553	96906	MS3106R10SL-3S	.CONNECTOR,PLUG,ELEC (USE WITH BRANCHED WIRING HARNESS P/N 12254376) UOC:2CA	1
11	PAOZZ	5935-00-754-8711	96906	MS3108R10SL-3S	.CONNECTOR,PLUG,ELEC (USE WITH BRANCHED WIRING HARNESS P/N 12354385) UOC:2CA	1
12	PBOZZ	9390-00-146-9334	19207	8724762	.NONMETALLIC ROD. UOC:2CA	1
13	PAOZZ	5935-00-833-8561	19207	8338561	.SHELL,ELECTRICAL CO UOC:2CA	4
14	PAOZZ	5970-00-833-8562	19207	8338562	.INSULATOR,BUSHING UOC:2CA	4
15	PAOZZ	9905-01-013-8723	81349	M43436/3-1	.BAND,MARKER (USE WITH BRANCHED WIRING HARNESS P/N 12254376) UOC:2CA	1
16	PAOOO	5935-00-771-6793	19207	7716793	.CONNECTOR,RECEPTACL UOC:2CA	1
17	PAOZZ	5935-01-033-7945	19207	8701338	..SHELL,ELECTRICAL CO UOC:2CA	1
18	PAOZZ	5935-00-257-1024	19207	7716683	..INSERT,ELECTRICAL C UOC:2CA	1
19	PAOZZ	5999-00-485-8955	19207	7716521	..CONTACT,ELECTRICAL UOC:2CA	12
20	PAOZZ	5365-00-090-5426	19207	7722333	.BUSHING,NONMETALLIC. UOC:2CA	1
21	PAOZZ	5310-00-393-6685	19207	7723309	.NUT,PLAIN,KNURLED. UOC:2CA	1
22	PAOZZ	5940-00-705-6710	56501	TG10	.TERMINAL,LUG UOC:2CA	3

(1) ITEM NO.	(2) SMR CODE	(3) NSN	(4) CAGEC	(5) PART NUMBER	(6) DESCRIPTION AND USABLE ON CODES(UOC)	(7) QTY
23	PAOOO	5935-00-772-2353	19207	7722353	.CONNECTOR,RECEPTACL UOC:2CA	1
24	PAOZZ	5935-00-489-6784	19207	8701329	..SHELL,ELECTRICAL CO UOC:2CA	1
25	PAOZZ	5935-01-005-6455	19207	7723474	..INSERT,ELECTRICAL C UOC:2CA	1
26	PAOZZ	5999-00-485-8955	19207	7716521	..CONTACT,ELECTRICAL UOC:2CA	8
27	PBOZZ	9390-00-180-7289	19207	8724763	.NONMETALLIC ROD UOC:2CA	1
28	PAOZZ	5365-00-772-2322	19207	7722322	.BUSHING,NONMETALLIC UOC:2CA	1
29	PAOZZ	5935-00-333-9414	19207	7723308	.NUT,BUSHING RETAINE UOC:2CA	2
30	PAOZZ	5935-00-772-3307	19204	7723307	.NUT,BUSHING RETAINE UOC:2CA	1
31	PAOZZ		77820	10-40817-10	.INSERT,ELECTRICAL C UOC:2CA	1
32	PAOZZ	5975-00-697-7769	19207	7527645	.NUT,COUPLING,ELECTR UOC:2CA	1
33	PAOOO	5935-00-605-9322	80064	1755683	.CONNECTOR,PLUG,ELEC UOC:2CA	1
34	PAOZZ	6150-00-651-4079	19207	7383560	..CONTACT,ELECTRICAL UOC:2CA	3
35	PAOZZ	5970-00-615-8884	19207	8344324	..INSULATOR,BUSHING UOC:2CA	1
36	PAOZZ	5935-00-462-2913	19207	8344527	..SHELL,ELECTRICAL CO UOC:2CA	1
37	PAOOO	5935-01-084-6024	19207	8724223	.CONNECTOR,PLUG,ELEC UOC:2CA	1
38	PAOZZ	5935-01-088-4466	19207	8701308	..SHELL,ELECTRICAL CO UOC:2CA	1
39	XAOZZ		19207	8701317	..INSERT,ELECTRICAL C UOC:2CA	4
40	PAOZZ	5999-00-532-0264	19207	8701324	..CONTACT,ELECTRICAL UOC:2CA	4
41	PAOZZ	5975-00-752-7644	77820	10-40457-14S	.NUT,COUPLING,ELECTR UOC:2CA	1
42	PAOZZ	5325-00-432-4724	77820	10-40814-2	.GROMMET,NONMETALLIC UOC:2CA	1
43	PAOZZ		77820	60-37005-141	.NUT,BUSHING RETAINE UOC:2CA	1
44	PAOZZ	9905-01-069-7222	81349	M43436/2-1	.BAND,MARKER (USE WITH BRANCHED WIRING HARNESS P/N 12254376) UOC:2CA	49
45	MOOZZ		81343	M23053/5-108-0	.INSULATION SLEEVING (MAKE FROM INSULATION SLEEVING P/N M23053/5-108-0) UOC:2CA	V
46	PAOOO	5935-00-686-9963	19204	8724240	.CONNECTOR,PLUG,ELEC UOC:2CA	1
47	PAOZZ	2590-01-047-0804	19207	8701309	..SHELL,PLUG UOC:2CA	1
48	PAOZZ	5935-01-109-2257	19207	7971509	..INSERT,ELECTRICAL C UOC:2CA	1
49	PAOZZ	6150-00-651-4079	19207	7383560	..CONTACT,ELECTRICAL UOC:2CA	2
50	PAOZA	5999-00-771-6527	19207	7716527	..CONTACT,ELECTRICAL UOC:2CA	2
51	PAOZZ	5310-00-655-9860	19207	8701325	.NUT,SLEEVE UOC:2CA	1
52	PAOZZ	5365-00-690-7933	19207	7388351	.BUSHING,NONMETALLIC UOC:2CA	1

(1) ITEM NO.	(2) SMR CODE	(3) NSN	(4) CAGEC	(5) PART NUMBER	(6) DESCRIPTION AND USABLE ON CODES(UOC)	(7) QTY
53	PAOZZ	5940-00-113-9824	96906	MS20659-107	.TERMINAL,LUG UOC:2CA	1
54	PAOZZ	5940-00-114-1315	96906	MS20659-142	.TERMINAL,LUG UOC:2CA	1

END OF FIGURE

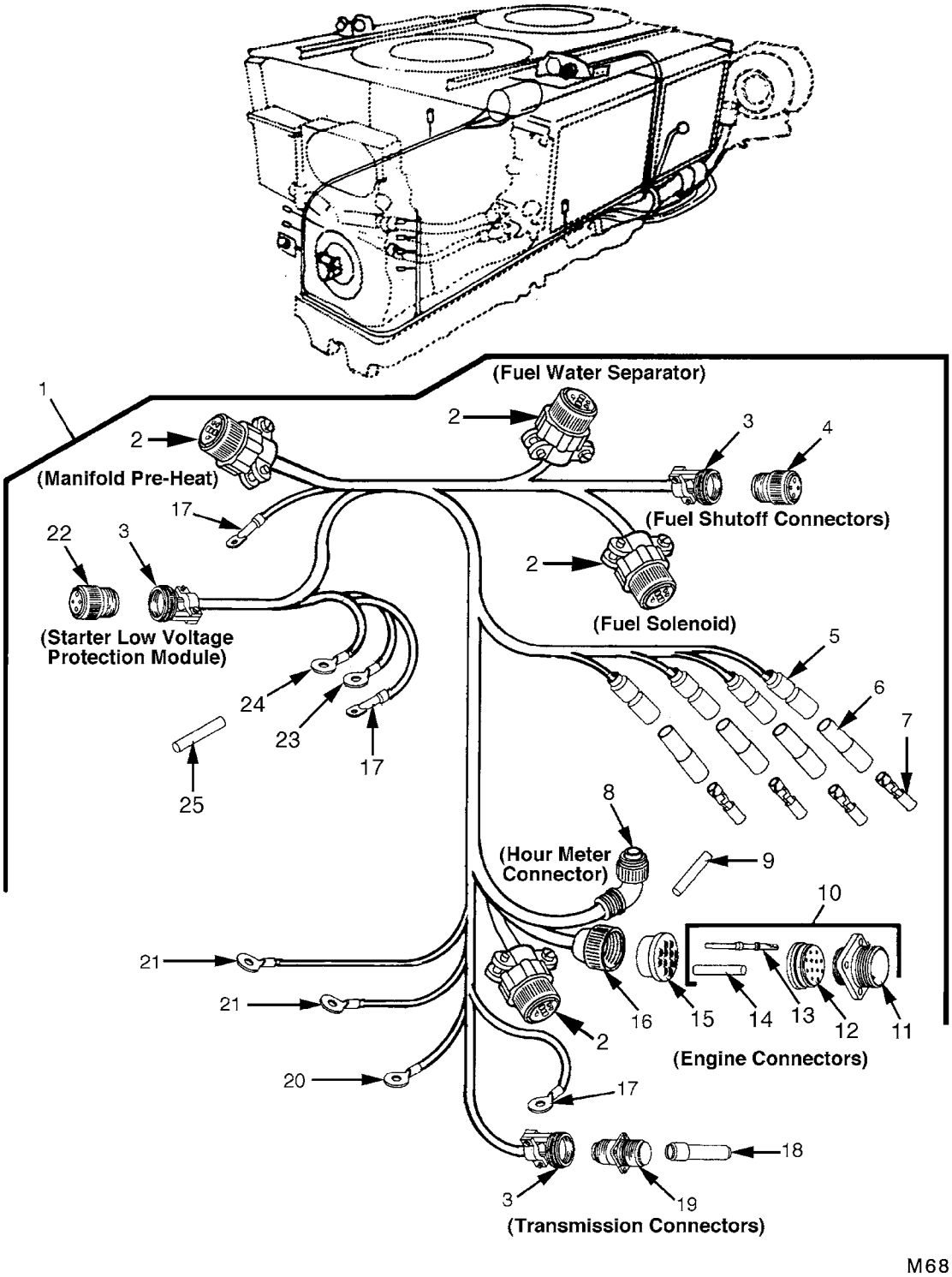

FIGURE 68. ENGINE WIRING HARNESS CONNECTORS AND TERMINALS (MODEL AVDS-1790-2DA)

(1) ITEM NO.	(2) SMR CODE	(3) NSN	(4) CAGEC	(5) PART NUMBER	(6) DESCRIPTION AND USABLE ON CODES(UOC)	(7) QTY
					GROUP 0613: HULL OR CHASSIS WIRING HARNESS	
					FIG.68 ENGINE WIRING HARNESS CONNECTORS AND TERMINALS (MODEL AVDS-1790-2DA)	
1	PAOOO	2920-01-068-3385	19207	12254378	WIRING HARNESS,BRAN (USE WITH STARTER RELAY SOLENOID ONLY) UOC:2DA	1
1	PAOOO	5995-01-290-1299	19207	12354384	WIRING HARNESS,BRAN (USE WITH STARTER RELAY SOLENOID AND TIME TOTALIZING METER). UOC:2DA	1
2	PAOZZ		96906	MS3106R-105L-4S	.CONNECTOR,PLUG,ELEC UOC:2DA	4
3	PAOZZ	5935-01-367-9369	81349	M85049/52-S-22W	.CLAMP,CABLE,ELECTRI. UOC:2DA	3
4	PAOZZ	5935-01-147-0148	96906	MS3456W12-5S	.CONNECTOR,PLUG,ELEC UOC:2DA	1
5	PAOZZ	5935-00-833-8561	19207	8338561	.SHELL,ELECTRICAL CO UOC:2DA	4
6	PAOZZ	5970-00-833-8562	19207	8338562	.INSULATOR,BUSHING UOC:2DA	4
7	PAOZZ	5940-00-399-6676	19207	8338564	.TERMINAL SET,QUICK. UOC:2DA	4
8	PAOZZ	5935-00-754-8711	96906	MS3108R10SL-3S	.CONNECTOR,PLUG,ELEC UOC:2DA	1
9	PAOZZ	9390-00-146-9334	19207	8724762	.NONMETALLIC ROD. UOC:2DA	1
10	PAOZZ	5935-00-771-6793	19207	7716793	.CONNECTOR,RECEPTACL UOC:2DA	1
11	PAOZZ	5935-01-033-7945	19207	8701338	..SHELL,ELECTRICAL CO UOC:2DA	1
12	PAOZZ	5935-00-257-1024	19207	7716683	..INSERT,ELECTRICAL C UOC:2DA	1
13	PAOZZ	5999-00-485-8955	19207	7716521	..CONTACT,ELECTRICAL UOC:2DA	2
14	PBOZZ	9390-00-180-7289	19207	8724763	..NONMETALLIC ROD UOC:2DA	2
15	PAOZZ	5365-00-090-5426	19207	7722333	.BUSHING,NONMETALLIC. UOC:2DA	1
16	PAOZZ	5310-00-393-6685	19207	7723309	.NUT,PLAIN,KNURLED. UOC:2DA	1
17	PAOZZ	5940-00-705-6710	56501	TG10	.TERMINAL,LUG UOC:2DA	3
18	PAOZZ	5935-00-235-8970	96906	MS27488-16-1	.PLUG,END SEAL,ELECT UOC:2DA	4
19	PAOZZ	5935-00-772-2353	19207	7722353	.CONNECTOR,RECEPTACL UOC:2DA	1
20	PAOZZ	5940-00-705-6711	56501	TG11	.TERMINAL,LUG UOC:2DA	1
21	PAOZZ	5940-00-143-4794	96906	MS25036-112	.TERMINAL,LUG UOC:2DA	2
22	PAOZZ	5935-01-259-4846	96906	MS3456W22-4S	.CONNECTOR,PLUG,ELEC UOC:2DA	1
23	PAOZZ	5940-00-114-1315	96906	MS20659-142	.TERMINAL,LUG UOC:2DA	1
24	PAOZZ	5940-00-113-9824	96906	MS20659-107	.TERMINAL,LUG UOC:2DA	1

(1) ITEM NO.	(2) SMR CODE	(3) NSN	(4) CAGEC	(5) PART NUMBER	(6) DESCRIPTION AND USABLE ON CODES(UOC)	(7) QTY
25	MOOZZ		81343	M23053/5-108-0	.INSULATION SLEEVING (MAKE FROM INSULATION SLEEVING P/N M23053/5-108-0) UOC:2DA	V

END OF FIGURE

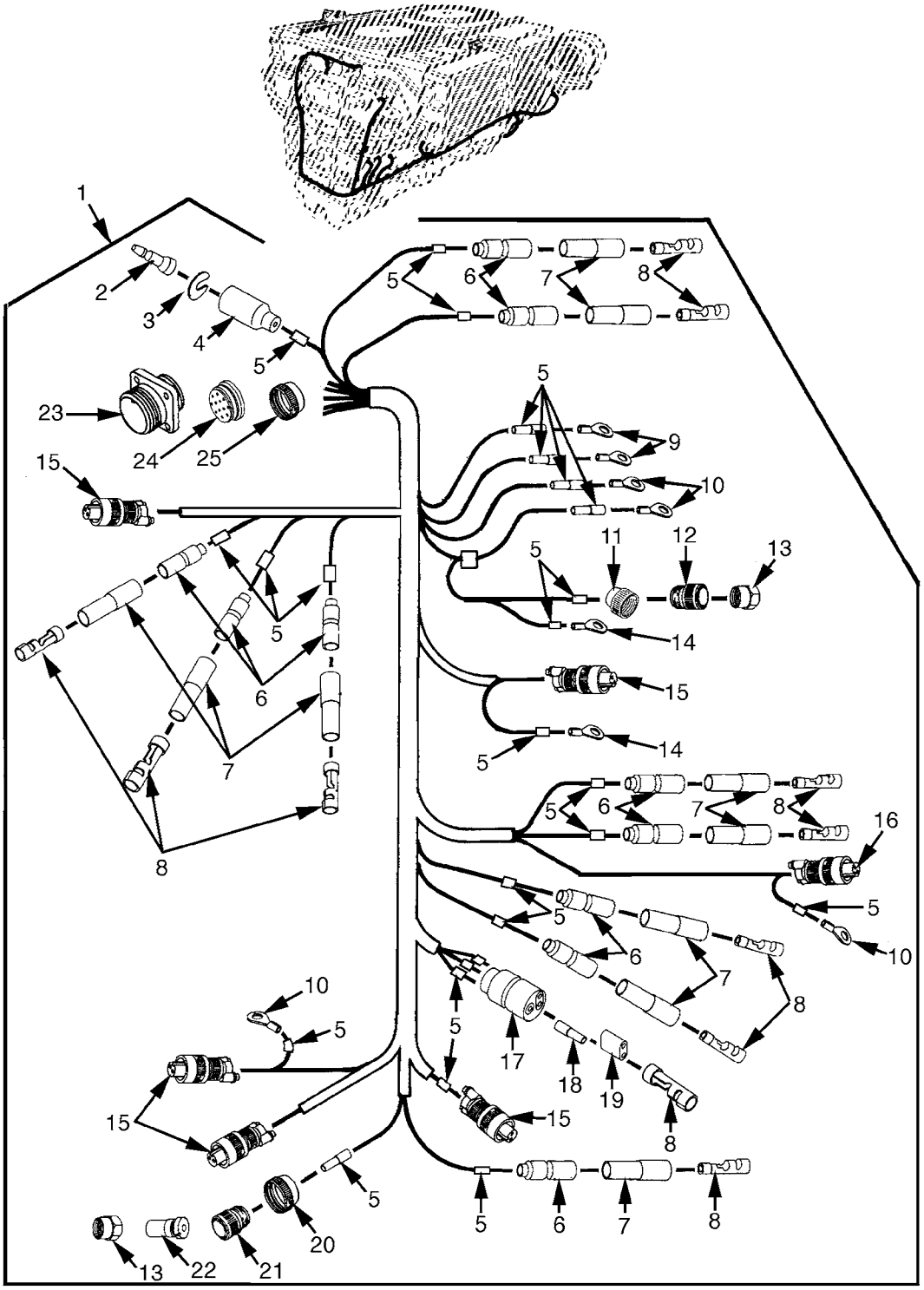

FIGURE 69. ENGINE WIRING HARNESS CONNECTORS AND TERMINALS
(MODEL AVDS-1790-2DR)

(1) ITEM NO.	(2) SMR CODE	(3) NSN	(4) CAGEC	(5) PART NUMBER	(6) DESCRIPTION AND USABLE ON CODES(UOC)	(7) QTY
					GROUP 0613: HULL OR CHASSIS WIRING HARNESS	
					FIG.69 ENGINE WIRING HARNESS CONNECTORS AND TERMINALS (MODEL AVDS-1790-2DR)	
1	PAOOO	5995-01-245-7651	19207	11671816	WIRING HARNESS,BRAN . . . . . UOC:EFR	1
2	PAOZZ	5999-00-057-2929	19204	572929	.CONTACT,ELECTRICAL . . . . . UOC:EFR	1
3	PAOZZ	5310-00-833-8567	19207	8338567	.WASHER,SLOTTED. . . . . UOC:EFR	1
4	PAOZZ	5935-00-572-9180	19207	8338566	.SHELL,ELECTRICAL CO . . . . . UOC:EFR	1
5	MOOZZ		81349	M23053/1-103-0	.INSULATION SLEEVING (MAKE FROM INSULATION SLEEVING P/N M23053/1-103-0) . . . . . UOC:EFR	V
6	PAOZZ	5935-00-833-8561	19207	8338561	.SHELL,ELECTRICAL CO . . . . . UOC:EFR	10
7	PAOZZ	5970-00-833-8562	19207	8338562	.INSULATOR,BUSHING . . . . . UOC:EFR	10
8	PAOZZ	5940-00-399-6676	19207	8338564	.TERMINAL SET,QUICK. . . . . UOC:EFR	13
9	PAOZZ	5940-00-143-4794	96906	MS25036-112	.TERMINAL,LUG . . . . . UOC:EFR	2
10	PAOZZ	5940-01-035-4212	19207	7728780	.TERMINAL,LUG . . . . . UOC:EFR	3
11	PAOZZ	5935-00-772-3307	19204	7723307	.NUT,BUSHING RETAINE . . . . . UOC:EFR	1
12	PAOZZ	5935-00-686-9962	19207	8724233	.CONNECTOR,PLUG,ELEC . . . . . UOC:EFR	1
13	PAOZZ	5975-00-697-7769	19207	7527645	.NUT,COUPLING,ELECTR . . . . . UOC:EFR	2
14	PAOZZ	5940-01-059-5266	19207	7728779	.TERMINAL,LUG . . . . . UOC:EFR	3
15	PAOZZ	5935-00-553-3093	96906	MS3106E-10SL-4S	.CONNECTOR,PLUG,ELEC . . . . . UOC:EFR	5
16	PAOZZ	5935-00-813-4716	96906	MS3106R-10SL-3S	.CONNECTOR,PLUG,ELEC . . . . . UOC:EFR	1
17	PAOZZ	5935-00-745-7885	0N942	10875100	.SHELL,ELECTRICAL CO . . . . . UOC:EFR	1
18	PAOZZ	5935-00-745-7886	19207	10875101	.CONNECTOR BODY,PLUG . . . . . UOC:EFR	1
19	PAOZZ	5970-00-833-8562	19207	8338562	.INSULATOR,BUSHING . . . . . UOC:EFR	1
20	PAOZZ	5935-00-333-3088	19207	7723306	.NUT,BUSHING RETAINE . . . . . UOC:EFR	1
21	PAOZZ	5935-00-686-2610	19207	8724199	.CONNECTOR,PLUG,ELEC . . . . . UOC:EFR	1
22	PAOZZ	5365-00-772-2343	19207	7722343	.BUSHING,NONMETALLIC. . . . . UOC:EFR	1
23	PAOZZ	5935-00-257-1024	19207	7716683	.INSERT,ELECTRICAL C . . . . . UOC:EFR	1
24	PAOZZ	5365-00-090-5426	19207	7722333	.BUSHING,NONMETALLIC. . . . . UOC:EFR	1
25	PAOZZ	5310-00-393-6685	19207	7723309	.NUT,PLAIN,KNURLED. . . . . UOC:EFR	1

END OF FIGURE

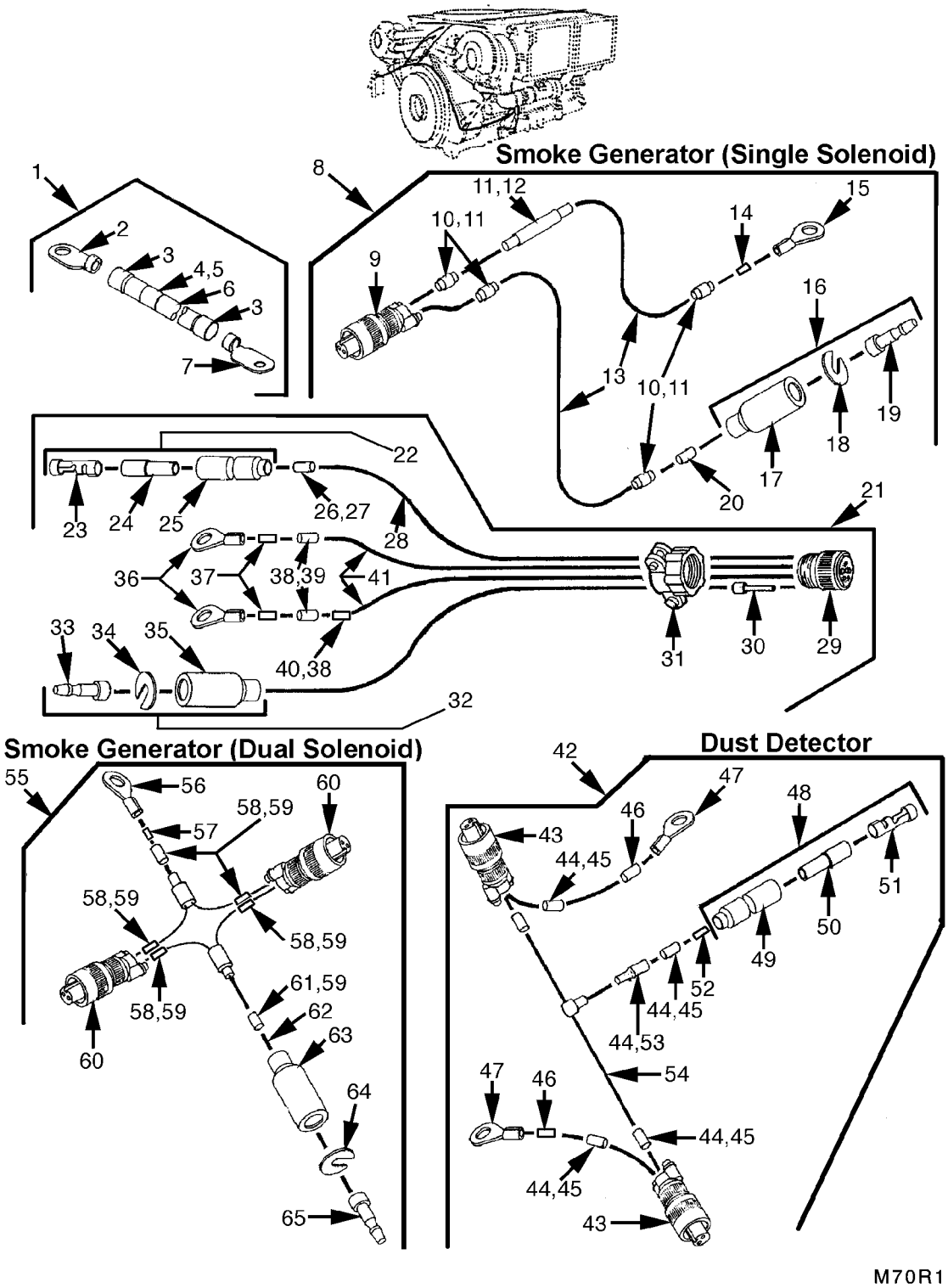

FIGURE 70. STARTER WIRING HARNESS (STARTER GROUND; MODEL AVDS-1790-2DR)

(1) ITEM NO.	(2) SMR CODE	(3) NSN	(4) CAGEC	(5) PART NUMBER	(6) DESCRIPTION AND USABLE ON CODES(UOC)	(7) QTY
					GROUP 0613: HULL OR CHASSIS WIRING HARNESS	
					FIG.70 STARTER WIRING HARNESS (STARTER GROUND;MODEL AVDS-1790-2DR)	
1	PAOOO	6150-00-118-8730	19207	10887570	LEAD,ELECTRICAL. . . . . UOC:EFR	1
2	PAOZZ	5940-00-115-5001	96906	MS20659-135	.TERMINAL,LUG . . . . . UOC:EFR	1
3	MOOZZ		81349	M23053/8-109-0	.INSULATION SLEEVING (MAKE FROM INSULATION SLEEVING P/N M23053/8-109-0) . . . . . UOC:EFR	V
4	MOOZZ		81349	M23053/5-109-4	.INSULATION SLEEVING (MAKE FROM INSULATION SLEEVING P/N M23053/5-109-4) . . . . . UOC:EFR	V
5	MOOZZ		81349	M23053/8-109-C	.INSULATION SLEEVING (MAKE FROM INSULATION SLEEVING P/N M23053/8-109-C). . . . . UOC:EFR	V
6	MOOZZ		19207	12293251-3	.WIRE,ELECTRICAL (MAKE FROM WIRE, ELECTRICAL P/N 12293251-3) . . . . . UOC:EFR	V
7	PAOZZ	5940-00-115-5006	96906	MS25036-133	.TERMINAL,LUG . . . . . UOC:EFR	1
8	PAOOO	6150-01-509-3762	19207	12354467	CABLE ASSEMBLY SET,. . . . . UOC:EFR	1
9	PAOZZ	5935-00-509-6194	96906	MS3456W10SL-4S	.CONNECTOR,PLUG,ELEC . . . . . UOC:EFR	1
10	MOOZZ		81343	M23053/5-104-9	.INSULATION SLEEVING (MAKE FROM INSULATION SLEEVING P/N M23053/5-104-9) . . . . . UOC:EFR	V
11	MOOZZ		81349	M23053/5-204-C	.INSULATION SLEEVING (MAKE FROM INSULATION SLEEVING P/N M23053/5-204-C). . . . . UOC:EFR	V
12	PAOZZ	9905-00-752-4649	81349	M43436/1-1	.BAND,MARKER . . . . . UOC:EFR	1
13	MOOZZ		81349	M81044/12-16-0	.WIRE,ELECTRICAL (MAKE FROM WIRE, ELECTRICAL P/N M81044/12-16-0) . . . . . UOC:EFR	V
14	MOOZZ		81343	M23053/5-104-0	.INSULATION SLEEVING (MAKE FROM INSULATION SLEEVING P/N M23053/5-104-0) . . . . . UOC:EFR	V
15	PAOZZ	5940-00-113-3145	96906	MS20659-163	.TERMINAL,LUG . . . . . UOC:EFR	1
16	PAOOO	5935-00-115-2306	96906	MS27142-3	.CONNECTOR,PLUG,ELEC . . . . . UOC:EFR	1
17	PAOZZ	5935-00-691-5591	97403	13207E6498-2	..SHELL,ELECTRICAL CO . . . . . UOC:EFR	1
18	PAOZZ	5310-00-656-0067	19207	8724497	..WASHER,SLOTTED . . . . . UOC:EFR	1
19	PAOZZ	5999-00-926-3144	96906	MS27148-3	..CONTACT,ELECTRICAL . . . . . UOC:EFR	1
20	MOOZZ		81349	M23053/15-204-C	.INSULATION SLEEVING (MAKE FROM INSULATION SLEEVING P/N M23053/15-204-C). . . . . UOC:EFR	V
21	PAOOO	5995-01-255-0890	19207	12314745	WIRING HARNESS,BRAN . . . . . UOC:EFR	1

(1) ITEM NO.	(2) SMR CODE	(3) NSN	(4) CAGEC	(5) PART NUMBER	(6) DESCRIPTION AND USABLE ON CODES(UOC)	(7) QTY
22	PAOOO	5935-00-115-2307	96906	MS27144-2	.CONNECTOR,PLUG,ELEC UOC:EFR	1
23	PAOZZ	5940-00-399-6676	19207	8338564	..TERMINAL SET,QUICK UOC:EFR	1
24	PAOZZ	5970-00-833-8562	19207	8338562	..INSULATOR,BUSHING UOC:EFR	1
25	PAOZZ	5975-00-660-5962	19207	8724494	..CABLE NIPPLE,ELECTR UOC:EFR	1
26	MOOZZ		81343	M23053/5-104-9	.INSULATION SLEEVING (MAKE FROM INSULATION SLEEVING P/N M23053/5-104-9) UOC:EFR	V
27	MOOZZ		81343	M23053/5-104-0	.INSULATION SLEEVING (MAKE FROM INSULATION SLEEVING P/N M23053/5-104-0) UOC:EFR	V
28	MOOZZ		81349	M81044/12-16-0	.WIRE,ELECTRICAL (MAKE FROM WIRE, ELECTRICAL P/N M81044/12-16-0) UOC:EFR	V
29	PAOZZ	5935-01-246-9207	96906	MS3450W32-1S	.CONNECTOR,RECEPTACL UOC:EFR	1
30	PAOZZ	5935-01-097-0399	96906	MS27488-12-1	.PLUG,END SEAL,ELECT UOC:EFR	1
31	PAOZZ		81349	M85049/52-1-32	.CLAMP UOC:EFR	1
32	PAOOO	5935-00-115-2306	96906	MS27142-3	.CONNECTOR,PLUG,ELEC UOC:EFR	1
33	PAOZZ	5999-00-926-3144	96906	MS27148-3	..CONTACT,ELECTRICAL UOC:EFR	1
34	PAOZZ	5310-00-656-0067	19207	8724497	..WASHER,SLOTTED UOC:EFR	1
35	PAOZZ	5935-00-691-5591	97403	13207E6498-2	..SHELL,ELECTRICAL CO UOC:EFR	1
36	PAOZZ	5940-00-115-5001	96906	MS20659-135	.TERMINAL,LUG UOC:EFR	2
37	MOOZZ		81343	M23053/5-104-0	.INSULATION SLEEVING (MAKE FROM INSULATION SLEEVING P/N M23053/5-104-0) UOC:EFR	V
38	MOOZZ		81349	M23053/5-204-C	.INSULATION SLEEVING (MAKE FROM INSULATION SLEEVING P/N M23053/5-204-C) UOC:EFR	V
39	MOOZZ		81343	M23053/5-104-9	.INSULATION SLEEVING (MAKE FROM INSULATION SLEEVING P/N M23053/5-104-9) UOC:EFR	V
40	PAOZZ	9905-00-752-4649	81349	M43436/1-1	.BAND,MARKER UOC:EFR	1
41	MOOZZ		19207	12293251-3	.WIRE,ELECTRICAL (MAKE FROM WIRE, ELECTRICAL P/N 12293251-3) UOC:EFR	V
42	PAOOO	5995-01-262-9527	19207	12314651	WIRING HARNESS,BRAN UOC:EFR	1
43	PAOZZ	5935-00-509-6194	96906	MS3456W10SL-4S	.CONNECTOR,PLUG,ELEC UOC:EFR	2
44	MOOZZ		81343	M23053/5-104-9	.INSULATION SLEEVING (MAKE FROM INSULATION SLEEVING P/N M23053/5-104-9) UOC:EFR	V
45	MOOZZ		81349	M23053/5-204-C	.INSULATION SLEEVING (MAKE FROM INSULATION SLEEVING P/N M23053/5-204-C) UOC:EFR	V

(1) ITEM NO.	(2) SMR CODE	(3) NSN	(4) CAGEC	(5) PART NUMBER	(6) DESCRIPTION AND USABLE ON CODES(UOC)	(7) QTY
46	MOOZZ		81343	M23053/5-104-0	.INSULATION SLEEVING (MAKE FROM INSULATION SLEEVING P/N M23053/5-104-0) . . . . . UOC:EFR	V
47	PAOZZ	5940-00-113-3145	96906	MS20659-163	.TERMINAL,LUG . . . . . UOC:EFR	2
48	PAOOO	5935-00-115-2307	96906	MS27144-2	.CONNECTOR,PLUG,ELEC . . . . . UOC:EFR	1
49	PAOZZ	5975-00-660-5962	19207	8724494	..CABLE NIPPLE,ELECTR . . . . . UOC:EFR	1
50	PAOZZ	5970-00-833-8562	19207	8338562	..INSULATOR,BUSHING . . . . . UOC:EFR	1
51	PAOZZ	5940-00-399-6676	19207	8338564	..TERMINAL SET,QUICK . . . . . UOC:EFR	1
52	MOOZZ		81349	M23053/15-204-C	.INSULATION SLEEVING (MAKE FROM INSULATION SLEEVING P/N M23053/15-204-C). . . . . UOC:EFR	V
53	PAOZZ	9905-00-752-4649	81349	M43436/1-1	.BAND,MARKER . . . . . UOC:EFR	1
54	MOOZZ		81349	M81044/12-16-0	.WIRE,ELECTRICAL (MAKE FROM WIRE, ELECTRICAL P/N M81044/12-16-0) . . . . . UOC:EFR	V
55	PAOOO	6150-01-245-7645	19207	11672386	CABLE ASSEMBLY,POWE . . . . . UOC:EFR	1
56	PAOZZ	5940-00-113-3145	96906	MS20659-163	.TERMINAL,LUG . . . . . UOC:EFR	1
57	MOOZZ		81343	M23053/5-104-0	.INSULATION SLEEVING (MAKE FROM INSULATION SLEEVING P/N M23053/5-104-0) . . . . . UOC:EFR	V
58	MOOZZ		81343	M23053/5-104-9	.INSULATION SLEEVING (MAKE FROM INSULATION SLEEVING P/N M23053/5-104-9) . . . . . UOC:EFR	V
59	MOOZZ		81349	M23053/5-204-C	.INSULATION SLEEVING (MAKE FROM INSULATION SLEEVING P/N M23053/5-204-C). . . . . UOC:EFR	V
60	PAOZZ	5935-00-509-6194	96906	MS3456W10SL-4S	.CONNECTOR,PLUG,ELEC . . . . . UOC:EFR	2
61	PAOZZ	9905-00-752-4649	81349	M43436/1-1	.BAND,MARKER . . . . . UOC:EFR	1
62	MOOZZ		81349	M81044/12-16-0	.WIRE,ELECTRICAL (MAKE FROM WIRE, ELECTRICAL P/N M81044/12-16-0) . . . . . UOC:EFR	V
63	PAOZZ	5935-00-691-5591	97403	13207E6498-2	.SHELL,ELECTRICAL CO . . . . . UOC:EFR	1
64	PAOZZ	5310-00-656-0067	19207	8724497	.WASHER,SLOTTED. . . . . UOC:EFR	1
65	PAOZZ	5999-00-926-3144	96906	MS27148-3	.CONTACT,ELECTRICAL . . . . . UOC:EFR	1

END OF FIGURE

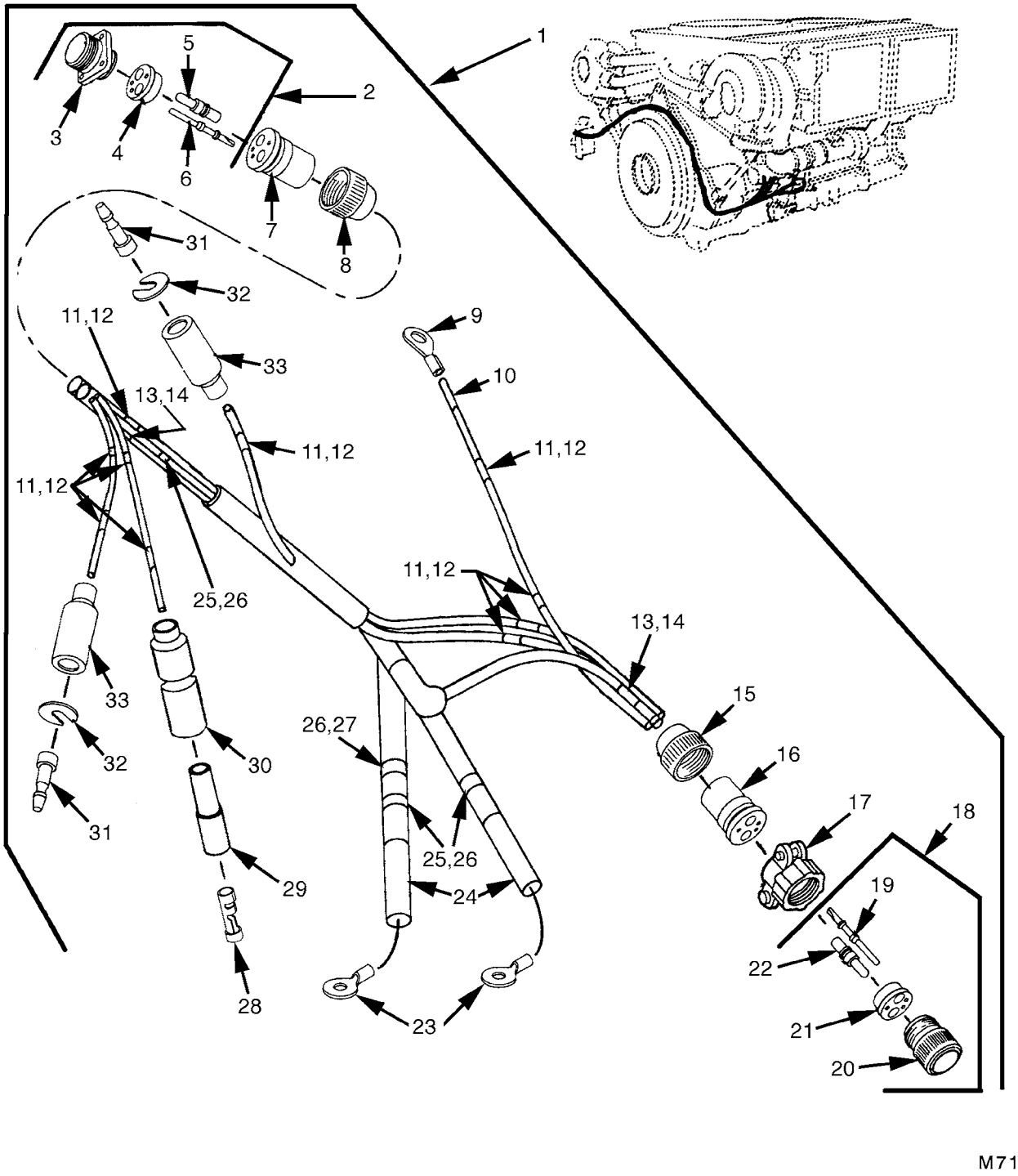

FIGURE 71. STARTER WIRING HARNESS
(STARTER SOLENOID; MODEL
AVDS-1790-2DR)

(1) ITEM NO.	(2) SMR CODE	(3) NSN	(4) CAGEC	(5) PART NUMBER	(6) DESCRIPTION AND USABLE ON CODES (UOC)	(7) QTY
					GROUP 0613: HULL OR CHASSIS WIRING HARNESS	
					FIG. 71 STARTER WIRING HARNESS (STARTER SOLENOID; MODELAVDS-1790-2DR)	
1	PAOOO	6150-01-235-0411	19207	11672414	WIRING HARNESS, BRANCH, DUAL VOLTAGE REG (DOWN PARTS NOT ILLUSTRATED) UOC:EFR	1
1	PAOOO	2920-01-245-7656	19207	11671792	WIRING HARNESS, BRANCH, SINGLE VOLTAGE REG UOC:EFR	1
2	PAOOO	5935-00-754-9080	19207	7388353	.CONNECTOR, RECEPTACLE UOC:EFR	
3	PAOZZ	5935-00-057-0746	19207	8701346	..SHELL, ELECTRICAL CONNECTOR UOC: EFR	1
4	PAOZZ	5935-01-106-5189	19207	8701345	..INSERT, ELECTRICAL CONNECTOR UOC: EFR	1
5	PAOZZ	5999-00-368-4852	77820	10-35527	..CONTACT, ELECTRICAL UOC: EFR	2
6	PAOZZ	5999-00-485-8955	19207	7716521	..CONTACT, ELECTRICAL UOC: EFR	3
7	PAOZZ	5365-00-682-2043	19207	7388356	.BUSHING, NONMETALLIC UOC: EFR	1
8	PAOZZ	5935-00-729-8217	19207	7388355	.NUT, BUSHING RETAINER UOC: EFR	1
9	PAOZZ	5940-00-705-6702	56501	TG2	.TERMINAL, LUG UOC: EFR	1
10	PAOZZ	5970-00-990-7048	81349	B7444-3-1-15B	.INSULATION SLEEVING UOC: EFR	V
11	PAOZZ	9905-00-752-4649	81349	M43436/1-1	.BAND, MARKER UOC: EFR	V
12	PAOZZ	9905-00-841-4445	81349	M43436/1-2	.BAND, MARKER UOC:EFR	V
13	MOOZZ		81343	M23053/5-106-9	.INSULATION SLEEVING (MAKE FROM INSULATION SLEEVING P/NM23053/5-106-9) UOC: EFR	V
14	MOOZZ		81349	M23053/8-006-C	.INSULATION SLEEVING (MAKE FROM INSULATION SLEEVING P/NM23053/8-006-C) UOC: EFR	V
15	PAOZZ	5935-00-333-9414	19207	7723308	.NUT, BUSHING RETAINER UOC:EFR	1
16	PAOZZ	5365-00-690-7933	19207	7388351	.BUSHING, NONMETALLIC UOC:EFR	1
17	PAOZZ	5310-00-655-9860	19207	8701325	.NUT, SLEEVE UOC: EFR	1
18	PAOOO	5935-00-686-9963	19207	8724240	.CONNECTOR, PLUG, ELECTRICAL UOC: EFR	1
19	PAOZZ	5999-00-771-6527	19207	7716527	..CONTACT, ELECTRICAL UOC: EFR	2
20	PAOZZ	2590-01-047-0804	19207	8701309	..SHELL, PLUG UOC: EFR	1
21	PAOZZ	5935-01-109-2257	19207	7971509	..INSERT, ELECTRICAL UOC: EFR	1
22	PAOZZ	6150-00-651-4079	19207	7383560	..CONTACT, ELECTRICAL UOC: EFR	2
23	PAOZZ	5940-00-735-5520	56501	TG33	.TERMINAL, LUG UOC: EFR	2
24	MOOZZ		81343	M23053/18-206-0	.INSULATION SLEEVING (MAKE FROM INSULATION SLEEVING P/NM23053/18-206-0) UOC: EFR	V

(1) ITEM NO.	(2) SMR CODE	(3) NSN	(4) CAGEC	(5) PART NUMBER	(6) DESCRIPTION AND USABLE ON CODES(UOC)	(7) QTY
25	MOOZZ		81343	M23053/5-109-9	.INSULATION SLEEVING (MAKE FROM INSULATION SLEEVING P/N M23053/5-109-9) . . . . . UOC:EFR	V
26	MOOZZ		81349	M23053/8-009-C	.INSULATION SLEEVING (MAKE FROM INSULATION SLEEVING P/N M23053/8-009-C). . . . . UOC:EFR	V
27	PAOZZ	9905-00-893-3570	81349	M43436/1-3	.BAND,MARKER . . . . . UOC:EFR	1
28	PAOZA	5999-00-926-3144	96906	MS27148-3	.CONTACT,ELECTRICAL . . . . . UOC:EFR	2
29	PAOZZ	5970-00-833-8562	19207	8338562	.INSULATOR,BUSHING . . . . . UOC:EFR	1
30	PAOZZ	5935-00-833-8561	19207	8338561	.SHELL,ELECTRICAL CO . . . . . UOC:EFR	1
31	PAOZZ	5940-00-399-6676	19207	8338564	.TERMINAL SET,QUICK. . . . . UOC:EFR	2
32	PAOZZ	5310-00-656-0067	19207	8724497	.WASHER,SLOTTED. . . . . UOC:EFR	2
33	PAOZZ	5935-00-691-5591	97403	13207E6498-2	.SHELL,ELECTRICAL CO . . . . . UOC:EFR	2

END OF FIGURE

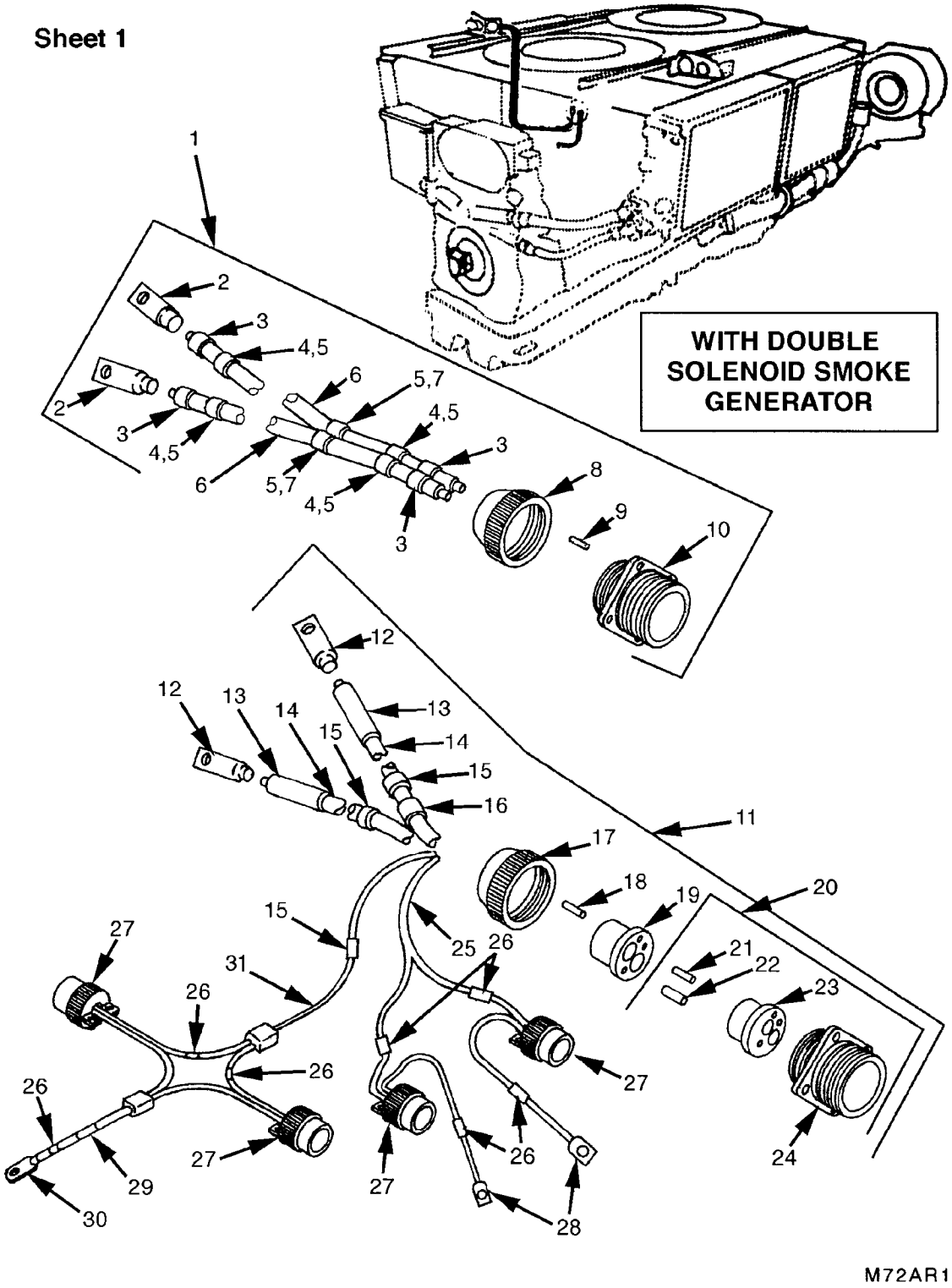

FIGURE 72. STARTER/SMOKE GENERATOR AND DUST DETECTOR WIRING HARNESSES (MODELS AVDS-1790-2CA AND AVDS-1790-2DA; SHEET 1 OF 2)

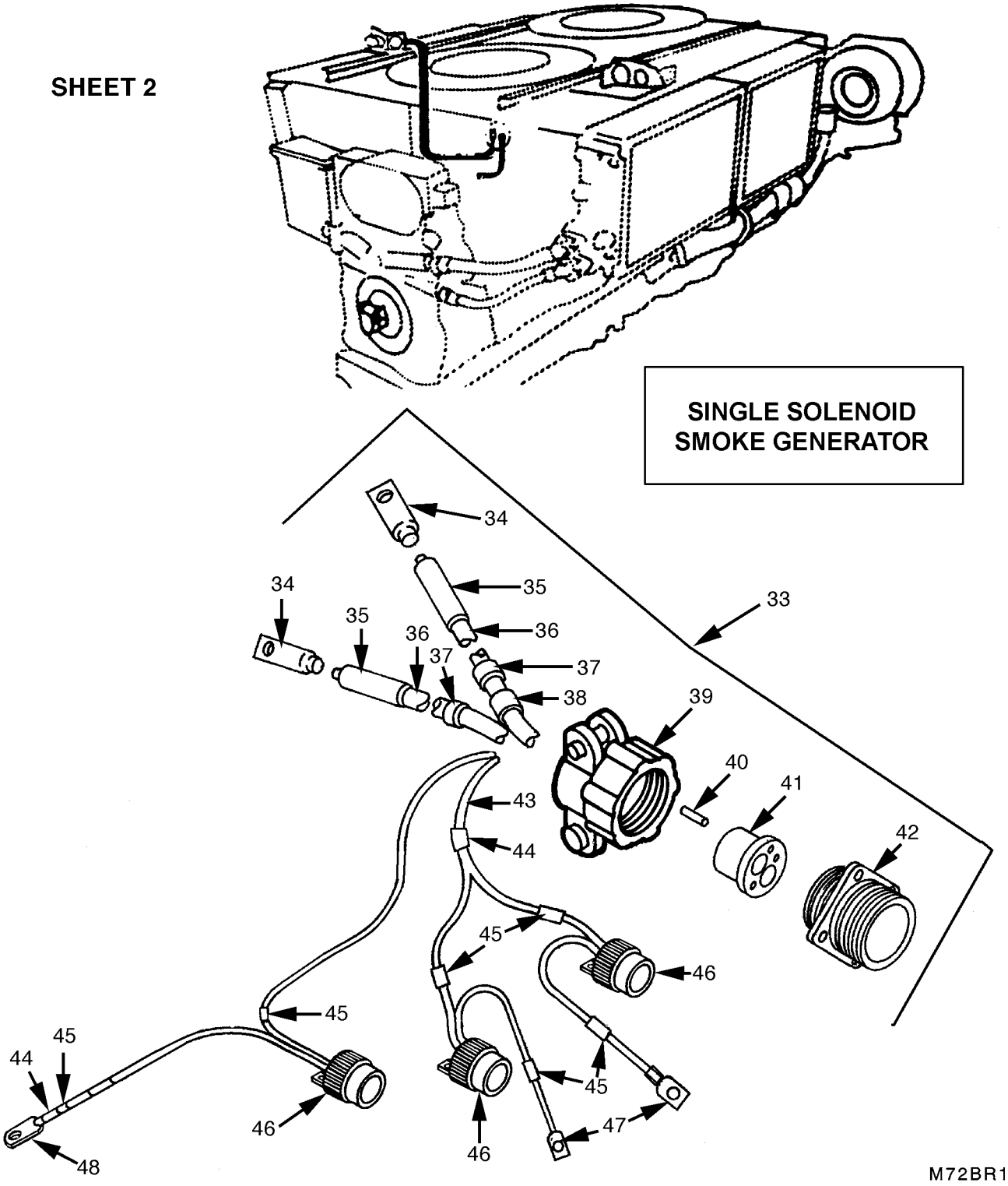

FIGURE 72. STARTER/SMOKE GENERATOR AND DUST DETECTOR WIRING HARNESSES (MODELS AVDS-1790-2CA AND AVDS-1790-2DA; SHEET 2 OF 2)

(1) ITEM NO.	(2) SMR CODE	(3) NSN	(4) CAGEC	(5) PART NUMBER	(6) DESCRIPTION AND USABLE ON CODES(UOC)	(7) QTY
					GROUP 0613: HULL OR CHASSIS WIRING HARNESS	
					FIG.72 STARTER/SMOKE GENERATOR AND DUST DETECTOR WIRING HARNESSES (MODELS AVDS-1790-2CA AND AVDS-1790-2DA)	
1	PAOOO	6150-00-423-3622	19207	11655454	WIRING HARNESS UOC:2CA,2DA	1
2	PAOZZ		59730	MS20695-135	.TERMINAL,LUG UOC:2CA,2DA	2
3	MOOZZ		81343	M23053/18-206-0	.INSULATION SLEEVING (MAKE FROM INSULATION SLEEVING P/N M23053/18-206-0) UOC:2CA,2DA	V
4	MOOZZ		81343	M23053/5-109-9	.INSULATION SLEEVING (MAKE FROM INSULATION SLEEVING P/N M23053/5-109-9) UOC:2CA,2DA	V
5	MOOZZ		81349	M23053/8-009-C	.INSULATION SLEEVING (MAKE FROM INSULATION SLEEVING P/N M23053/8-009-C) UOC:2CA,2DA	V
6	MOOZZ		19207	12293251-3	.WIRE,ELECTRICAL (MAKE FROM WIRE, ELECTRICAL P/N 12293251-3) UOC:2CA,2DA	V
7	MOOZZ		81349	M23053/5-109-4	.INSULATION SLEEVING (MAKE FROM INSULATION SLEEVING P/N M23053/5-109-4) UOC:2CA,2DA	V
8	PAOZZ	5935-01-388-5662	81349	M85049/31-32W	.ADAPTER,CABLE CLAMP UOC:2CA,2DA	1
9	PAOZZ	5935-01-097-0399	96906	MS27488-12-1	.PLUG,END SEAL,ELECT UOC:2CA,2DA	3
10	PAOZZ	5935-01-246-9207	96906	MS3450W32-1S	.CONNECTOR,RECEPTACL UOC:2CA,2DA	1
11	PAOOO	6150-01-150-9771	19207	12314619	CABLE ASSEMBLY,POWE UOC:2CA,2DA	1
12	PAOZZ		59730	MS20695-135	.TERMINAL,LUG UOC:2CA,2DA	2
13	MOOZZ		81349	M23053/1-105-0	.INSULATION SLEEVING (MAKE FROM INSULATION SLEEVING P/N M23053/1-105-0) UOC:2CA,2DA	V
14	MOOZZ		81349	M13486/1-14	.WIRE,ELECTRICAL (MAKE FROM WIRE, ELECTRICAL P/N M13486/1-14) UOC:2CA,2DA	V
15	PAOZZ	9905-00-752-4649	81349	M43436/1-1	.BAND,MARKER UOC:2CA,2DA	10
16	PAOZZ	9905-00-893-3570	81349	M43436/1-3	.BAND,MARKER UOC:2CA,2DA	1
17	PAOZZ	5935-00-729-8217	19207	7388355	.NUT,BUSHING RETAINE UOC:2CA,2DA	1
18	PFOZZ	9390-00-180-7289	19207	8724763	.NONMETALLIC ROD UOC:2CA,2DA	1
19	PAOZZ	5365-00-682-2043	19207	7388356	.BUSHING,NONMETALLIC UOC:2CA,2DA	1
20	PAOOO	5935-00-754-9080	19207	7388353	.CONNECTOR,RECEPTACL UOC:2CA,2DA	1
21	PAOZZ	5999-00-485-8955	19207	7716521	..CONTACT,ELECTRICAL UOC:2CA,2DA	12
22	PAOZZ	5999-00-368-4852	77820	10-35527	..CONTACT,ELECTRICAL UOC:2CA,2DA	2

(1) ITEM NO.	(2) SMR CODE	(3) NSN	(4) CAGEC	(5) PART NUMBER	(6) DESCRIPTION AND USABLE ON CODES(UOC)	(7) QTY
23	PAOZZ	5935-01-106-5189	19207	8701345	..INSERT,ELECTRICAL C UOC:2CA,2DA	1
24	PAOZZ	5935-00-057-0746	19207	8701346	..SHELL,ELECTRICAL CO UOC:2CA,2DA	1
25	MOOZZ		81349	M13486-1-3	.WIRE,ELECTRICAL (MAKE FROM WIRE, ELECTRICAL P/N M13486-1-3) UOC:2CA,2DA	V
26	MOOZZ		81343	M23053/5-106-9	.INSULATION SLEEVING (MAKE FROM INSULATION SLEEVING P/N M23053/5-106-9) UOC:2CA,2DA	V
27	PAOZZ	5935-00-509-6194	96906	MS3456W10SL-4S	.CONNECTOR,PLUG,ELEC UOC:2CA,2DA	4
28	PAOZZ	5940-00-314-0479	16528	7728778	.TERMINAL,LUG UOC:2CA,2DA	1
29	MOOZZ		81349	M23053/8-205-0	.INSULATION SLEEVING (MAKE FROM INSULATION SLEEVING P/N M23053/8-205-0) UOC:2CA,2DA	V
30	PAOZZ	5940-00-113-3145	96906	MS20659-163	.TERMINAL,LUG UOC:2CA,2DA	1
31	MOOZZ		81349	M13486-1-5	.WIRE,ELECTRICAL (MAKE FROM WIRE, ELECTRICAL P/N M13486/1-5) UOC:2CA,2DA	V
32	PAOOO	6150-01-509-3761	19207	12354468	CABLE ASSEMBLY SET, UOC:2CA,2DA	1
33	PAOZZ	5940-00-115-5001	96906	MS20659-135	.TERMINAL,LUG UOC:2CA,2DA	2
34	MOOZZ		81349	M23053/1-105-0	.INSULATION SLEEVING (MAKE FROM INSULATION SLEEVING P/N M23053/1-105-0) UOC:2CA,2DA	V
35	MOOZZ		81349	M13486/1-1	.WIRE,ELECTRICAL (MAKE FROM WIRE, ELECTRICAL P/N M13486/1-1) UOC:2CA,2DA	V
36	PAOZZ	9905-00-752-4649	81349	M43436/1-1	.BAND,MARKER UOC:2CA,2DA	10
37	PAOZZ	9905-00-893-3570	81349	M43436/1-3	.BAND,MARKER UOC:2CA,2DA	1
38	PAOZZ	5935-00-280-2192	71468	MS3057-24A	.CLAMP,CABLE,ELECTRI. UOC:2CA,2DA	1
39	PAOZZ	5935-01-097-0399	96906	MS27488-12-1	.PLUG,END SEAL,ELECT UOC:2CA,2DA	1
40	PAOZZ	5365-00-141-6945	96906	MS3420-24	.BUSHING,NONMETALLIC UOC:2CA,2DA	1
41	PAOZZ		96906	MS3450L32-1S	.BUSHING,NONMETALLIC UOC:2CA,2DA	1
42	MOOZZ		81349	M13486-1-5	.WIRE,ELECTRICAL (MAKE FROM WIRE, ELECTRICAL P/N M13486/1-5) UOC:2CA,2DA	V
43	MOOZZ		81349	M23053/8-205-0	.INSULATION SLEEVING (MAKE FROM INSULATION SLEEVING P/N M23053/8-205-0) UOC:2CA,2DA	V
44	MOOZZ		81343	M23053/5-106-9	.INSULATION SLEEVING (MAKE FROM INSULATION SLEEVING P/N M23053/5-106-9) UOC:2CA,2DA	V
45	PAOZZ	5935-00-051-4146	96906	MS3106R-10SL-4S	.CONNECTOR,PLUG UOC:2CA,2DA	3
46	PAOZZ	5940-00-115-5001	96906	MS20659-135	.TERMINAL,LUG UOC:2CA,2DA	3

(1) ITEM NO.	(2) SMR CODE	(3) NSN	(4) CAGEC	(5) PART NUMBER	(6) DESCRIPTION AND USABLE ON CODES(UOC)	(7) QTY
47	PAOZZ	5940-00-705-6709	56501	TG9	.TERMINAL,LUG UOC:2CA,2DA	1

END OF FIGURE

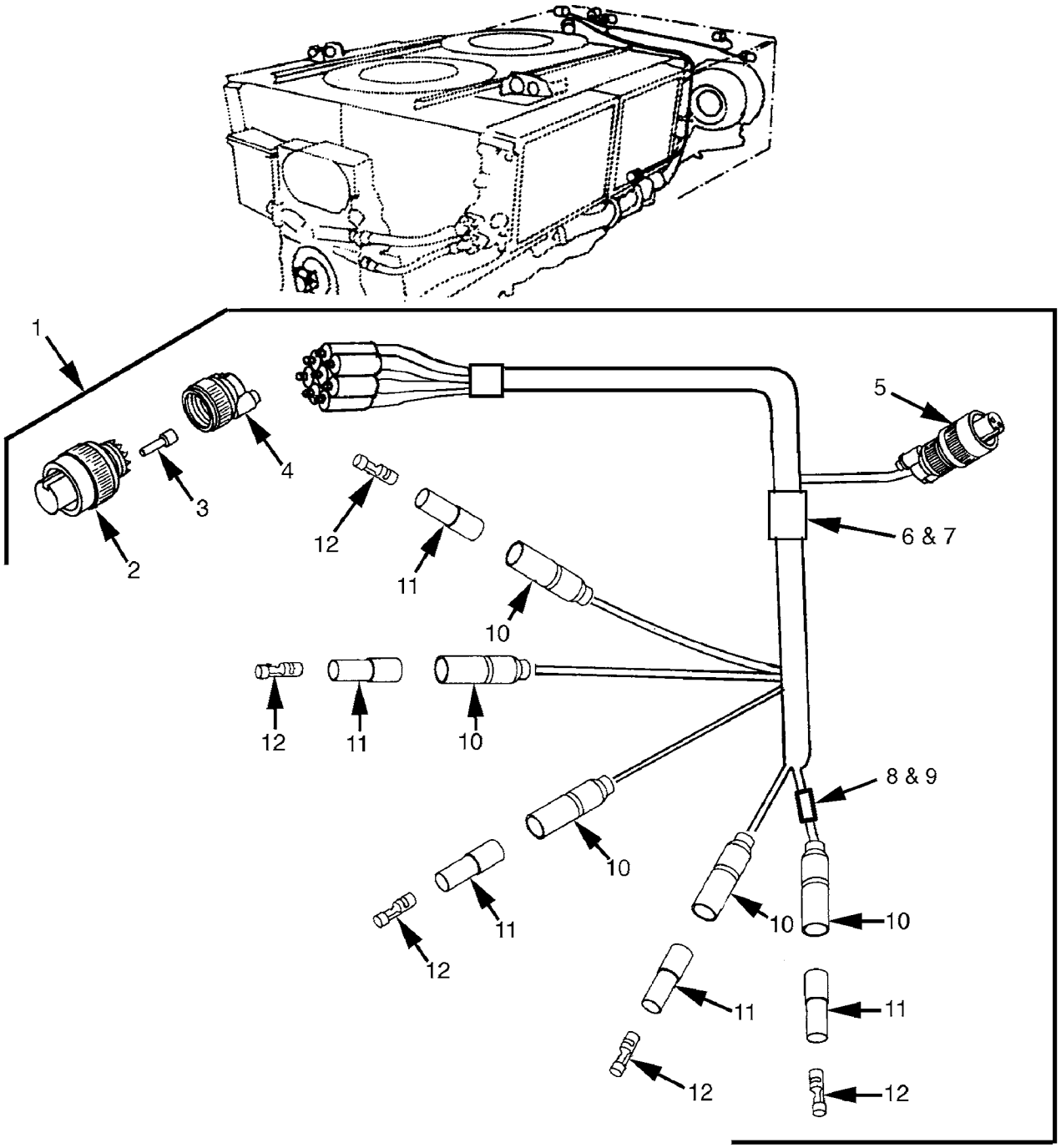

FIGURE 73. TRANSMISSION WIRING HARNESS CONNECTORS AND TERMINALS (MODELS AVDS-1790-2CA AND AVDS-1790-2DA)

(1) ITEM NO.	(2) SMR CODE	(3) NSN	(4) CAGEC	(5) PART NUMBER	(6) DESCRIPTION AND USABLE ON CODES(UOC)	(7) QTY
					GROUP 0613: HULL OR CHASSIS WIRING HARNESS	
					FIG.73 TRANSMISSION WIRING HARNESS CONNECTORS AND TERMINALS (MODELS AVDS-1790-2CA AND AVDS-1790-2DA)	
1	PAOOO	5995-00-399-5298	19207	11655457	WIRING HARNESS,BRAN UOC:2CA,2DA	1
2	PAOZZ	5935-01-118-5713	96906	MS3456W22-23P	.CONNECTOR,PLUG,ELEC UOC:2CA,2DA	1
3	PAOZZ	5935-01-097-0399	96906	MS27488-12-1	.PLUG,END SEAL,ELECT UOC:2CA,2DA	1
4	PAOZZ	5935-01-172-8574	81349	M85049/52-1-22W	.CLAMP,CABLE,ELECTRI. UOC:2CA,2DA	1
5	PAOZZ	5935-00-509-6194	96906	MS3456W10SL-4S	.CONNECTOR,PLUG,ELEC UOC:2CA,2DA	1
6	MOOZZ		81349	M23053/8-109-9	.INSULATION SLEEVING (MAKE FROM INSULATION SLEEVING P/N M23053/8-109-9) UOC:2CA,2DA	V
7	MOOZZ		81349	M23053/8-009-C	.INSULATION SLEEVING (MAKE FROM INSULATION SLEEVING P/N M23053/8-009-C). UOC:2CA,2DA	V
8	MOOZZ		81349	M23053/5-130-9	.INSULATION SLEEVING (MAKE FROM INSULATION SLEEVING P/N M23053/5-130-9) UOC:2CA,2DA	V
9	MOOZZ		81349	M23053/8-004-C	.INSULATION SLEEVING (MAKE FROM INSULATION SLEEVING P/N M23053/8-004-C). UOC:2CA,2DA	V
10	PAOZZ	5935-00-833-8561	19207	8338561	.SHELL,ELECTRICAL CO UOC:2CA,2DA	5
11	PAOZZ	5970-00-833-8562	19207	8338562	.INSULATOR,BUSHING UOC:2CA,2DA	5
12	PAOZZ	5940-00-399-6676	19207	8338564	.TERMINAL SET,QUICK. UOC:2CA,2DA	5

END OF FIGURE

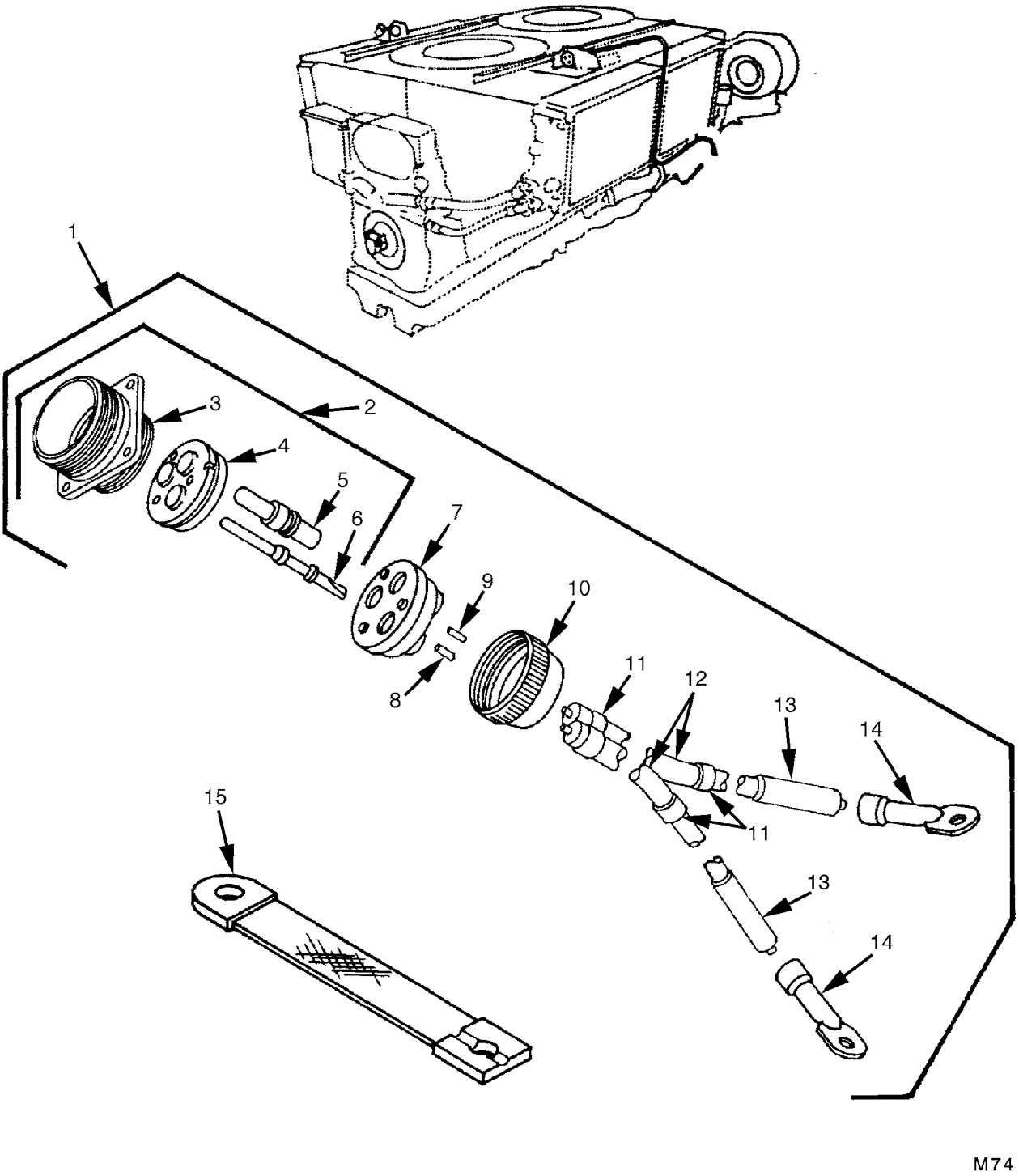

FIGURE 74. GENERATOR ELECTRICAL LEADS
(MODEL AVDS-1790-2CA)

(1) ITEM NO.	(2) SMR CODE	(3) NSN	(4) CAGEC	(5) PART NUMBER	(6) DESCRIPTION AND USABLE ON CODES(UOC)	(7) QTY
					GROUP 0613: HULL OR CHASSIS WIRING HARNESS	
					FIG.74 GENERATOR ELECTRICAL LEADS (MODEL AVDS-1790-2CA)	
1	PAOOO	2815-00-410-1976	19207	11655451	LEAD ASSEMBLY,ELECT UOC:2CA	1
2	PAOOO	5935-01-016-8330	19207	8395481-1	.CONNECTOR,RECEPTACL UOC:2CA	1
3	XAOZZ		19207	10924257	..SHELL,ELECTRICAL CO UOC:2CA	1
4	PAOZZ	5935-01-035-6792	19207	10924254	..INSERT,ELECTRICAL C UOC:2CA	1
5	PAOZZ	5999-00-368-4852	77820	10-35527	..CONTACT,ELECTRICAL UOC:2CA	3
6	PAOZZ	5999-00-485-8955	19207	7716521	..CONTACT,ELECTRICAL UOC:2CA	3
7	PAOZZ	5365-00-678-4258	77820	10-40836-3	.BUSHING,NONMETALLIC..... UOC:2CA	1
8	PBOZZ	9390-00-458-0130	19207	8724767	.NONMETALLIC ROD..... UOC:2CA	1
9	PFOZZ	9390-00-180-7289	19207	8724763	.NONMETALLIC ROD..... UOC:2CA	1
10	PAOZZ	5975-00-752-2746	19207	8395482	.NUT,COUPLING,ELECTR UOC:2CA	1
11	PAOZZ	9905-00-893-3570	81349	M43436/1-3	.BAND,MARKER UOC:2CA	1
12	MOOZZ		81349	M13486/1-14	.WIRE,ELECTRICAL (MAKE FROM WIRE, ELECTRICAL P/N M13486/1-14)..... UOC:2CA	V
13	MOOZZ		81349	M23053/5-110-0	.INSULATION SLEEVING (MAKE FROM INSULATION SLEEVING P/N M23053/5-110-0)..... UOC:2CA	V
14	PAOZZ	5940-00-115-5006	96906	MS25036-133	.TERMINAL,LUG UOC:2CA	2
15	PBOZZ	6150-01-008-1440	19207	11682595-1	LEAD,ELECTRICAL..... UOC:2CA	2

END OF FIGURE

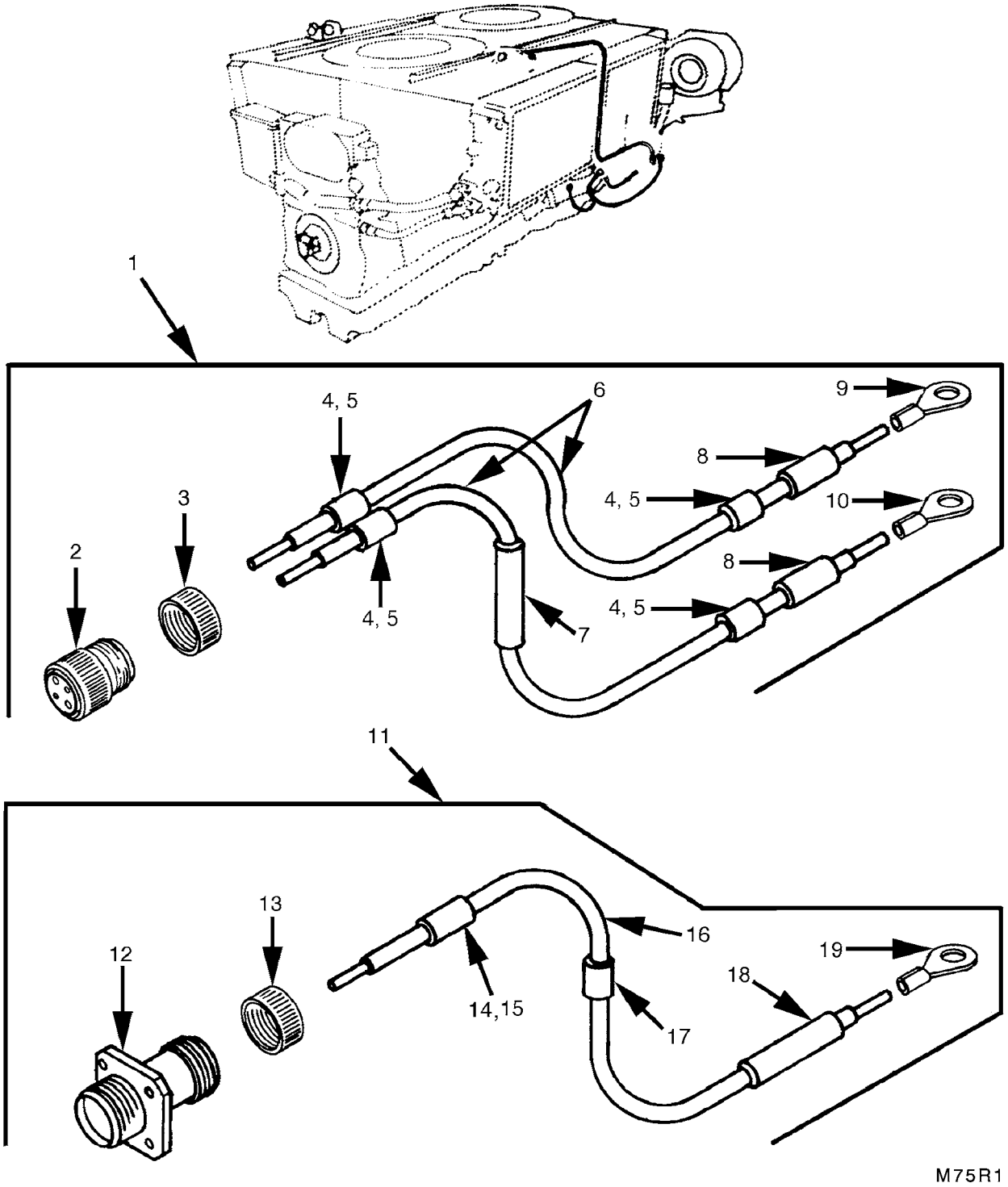

FIGURE 75. GENERATOR ELECTRICAL LEADS
(MODEL AVDS-1790-2DA)

(1) ITEM NO.	(2) SMR CODE	(3) NSN	(4) CAGEC	(5) PART NUMBER	(6) DESCRIPTION AND USABLE ON CODES(UOC)	(7) QTY
					GROUP 0613: HULL OR CHASSIS WIRING HARNESS	
					FIG.75 GENERATOR ELECTRICAL LEADS (MODEL AVDS-1790-2DA)	
1	PAOOO	5995-00-507-7779	19207	11682724	LEAD ASSEMBLY,ELECT UOC:2DA	1
2	PAOZZ	5935-00-624-7660	96906	MS3456W16-11S	.CONNECTOR,PLUG,ELEC UOC:2DA	1
3	PAOZZ	5935-01-182-6802	81349	M85049/31-16W	.ADAPTER,CABLE CLAMP UOC:2DA	1
4	MOOZZ		81349	M23053/5-103-9	.INSULATION SLEEVING (MAKE FROM INSULATION SLEEVING P/N M23053/5-103-9) UOC:2DA	V
5	MOOZZ		81349	M23053/8-004-C	.INSULATION SLEEVING (MAKE FROM INSULATION SLEEVING P/N M23053/8-004-C). UOC:2DA	V
6	MOOZZ		81349	M81044/12-16-0	.WIRE,ELECTRICAL (MAKE FROM WIRE, ELECTRICAL P/N M81044/12-16-0) UOC:2DA	V
7	MOOZZ		81349	M23053/5-103-4	.INSULATION SLEEVING (MAKE FROM INSULATION SLEEVING P/N M23053/5-103-4) UOC:2DA	V
8	PAOZZ	9905-00-752-4649	81349	M43436/1-1	.BAND,MARKER UOC:2DA	1
9	PAOZZ	5940-00-705-6710	56501	TG10	.TERMINAL,LUG UOC:2DA	1
10	PAOZZ	5940-00-113-3147	96906	MS20659-127	.TERMINAL,LUG UOC:2DA	1
11	PAOOF	6150-00-410-1232	19207	11682723	LEAD,ELECTRICAL. UOC:2DA	1
12	PAOZZ	5395-01-495-6576	77820	60-42022-7S	.CONNECTOR,RECEPTACL UOC:2DA	1
13	PAOZZ	5935-01-188-6979	81349	M85049/31-22W	.ADAPTER,CABLE CLAMP UOC:2DA	1
14	MOOZZ		81349	M23053/8-009-C	.INSULATION SLEEVING (MAKE FROM INSULATION SLEEVING P/N M23053/8-009-C). UOC:2DA	V
15	MOOZZ		81343	M23053/5-109-9	.INSULATION SLEEVING (MAKE FROM INSULATION SLEEVING P/N M23053/5-109-9) UOC:2DA	V
16	MOOZZ		19207	12293251-3	.WIRE,ELECTRICAL (MAKE FROM WIRE, ELECTRICAL P/N 12293251-3) UOC:2DA	V
17	MOOZZ		81349	M23053/5-109-4	.INSULATION SLEEVING (MAKE FROM INSULATION SLEEVING P/N M23053/5-109-4) UOC:2DA	V
18	MOOZZ		81349	M23053/1-205-0	.INSULATION,SLEEVING (MAKE FROM INSULATION SLEEVING P/N M23053/1-205-0) UOC:2DA	V
19	PAOZZ	5940-00-115-5006	96906	MS25036-133	.TERMINAL,LUG UOC:2DA	1

END OF FIGURE

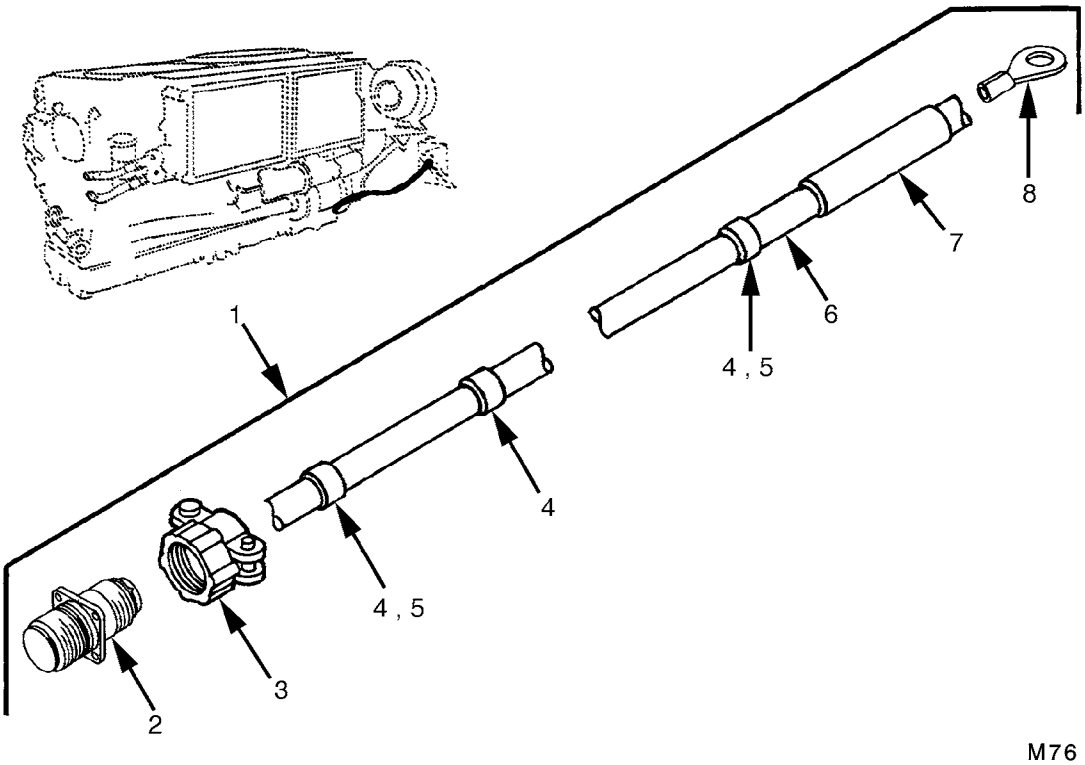

FIGURE 76. GENERATOR ELECTRICAL LEAD
(MODEL AVDS-1790-2DR)

(1) ITEM NO.	(2) SMR CODE	(3) NSN	(4) CAGEC	(5) PART NUMBER	(6) DESCRIPTION AND USABLE ON CODES(UOC)	(7) QTY
					GROUP 0613: HULL OR CHASSIS WIRING HARNESS	
					FIG.76 GENERATOR ELECTRICAL LEAD (MODEL AVDS-1790-2DR)	
1	PAOOO	6150-01-241-9352	19207	11671357	LEAD,ELECTRICAL. . . . . UOC:EFR	1
2	PAOZZ	5395-01-495-6576	77820	60-42022-7S	.CONNECTOR,RECEPTACL . . . . . UOC:EFR	1
3	PAOZZ	5935-00-489-6784	19207	8701329	.SHELL,ELECTRICAL CO . . . . . UOC:EFR	1
4	PAOZZ	9905-00-893-3570	81349	M43436/1-3	.BAND,MARKER . . . . . UOC:EFR	1
5	MOOZZ		81349	M23053/8-009-C	.INSULATION SLEEVING (MAKE FROM INSULATION SLEEVING P/N M23053/8-009-C). . . . . UOC:EFR	V
6	MOOZZ		19207	12293251-3	.WIRE,ELECTRICAL (MAKE FROM WIRE, ELECTRICAL P/N 12293251-3) . . . . . UOC:EFR	V
7	PAOZZ	5970-00-583-1814	81349	B7444-3-1-R500B	.INSULATION SLEEVING. . . . . UOC:EFR	1
8	PAOZZ	5940-00-115-5006	96906	MS25036-133	.TERMINAL,LUG . . . . . UOC:EFR	1

END OF FIGURE

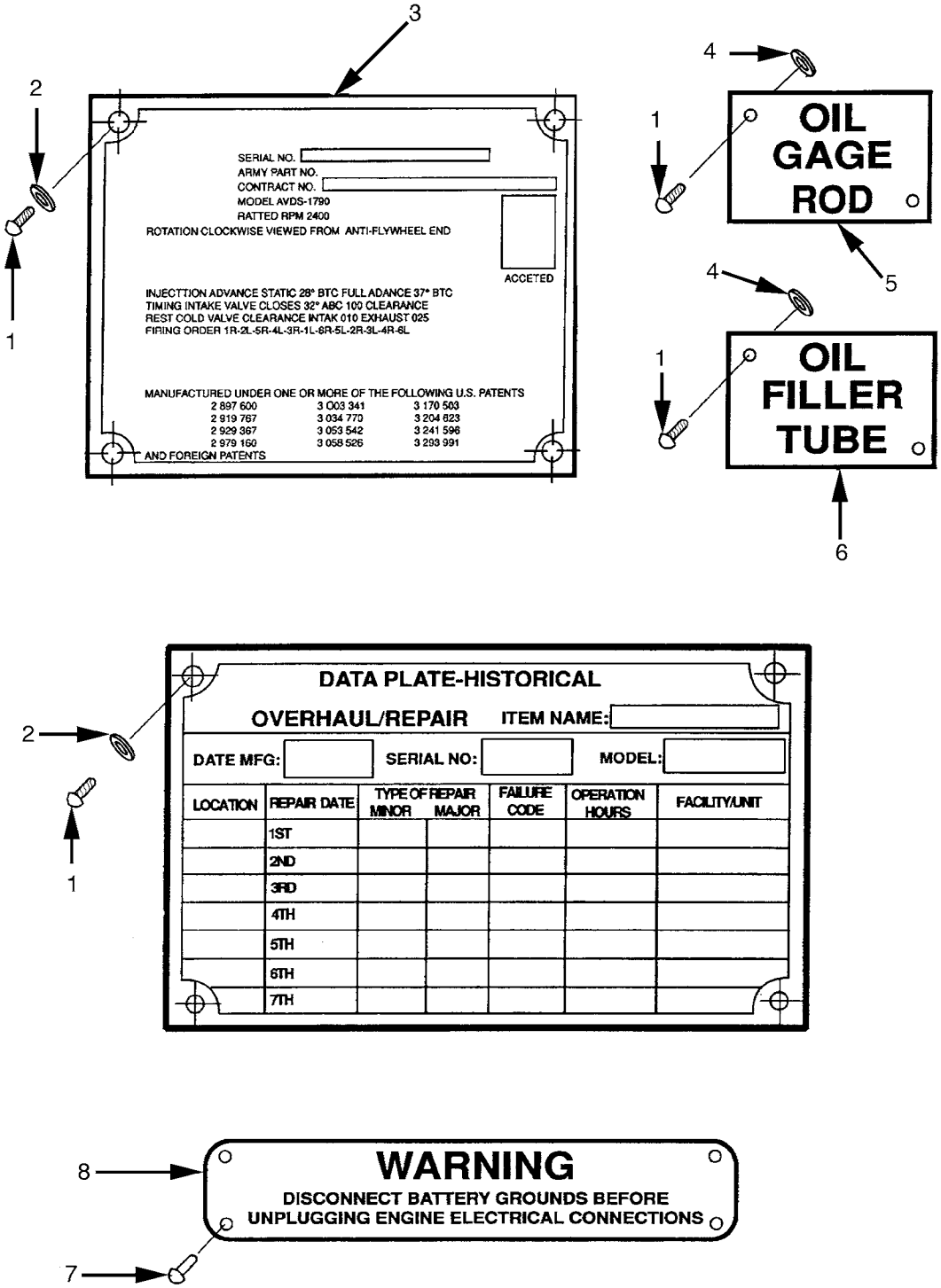

FIGURE 77. IDENTIFICATION PLATES

(1) ITEM NO.	(2) SMR CODE	(3) NSN	(4) CAGEC	(5) PART NUMBER	(6) DESCRIPTION AND USABLE ON CODES(UOC)	(7) QTY
					GROUP 22: BODY CHASSIS OR HULL, AND ACCESSORY ITEMS	
					GROUP 2210: DATA PLATES AND INSTRUCTION HOLDERS	
					FIG.77 IDENTIFICATION PLATES	
1	PAOZZ	5305-00-253-5618	80205	MS21318-27	SCREW,DRIVE	12
2	PAOZZ	5310-01-512-9322	19207	7416306	WASHER,FLAT	12
3	PAHZZ	9905-01-007-7165	19207	11684198	PLATE,IDENTIFICATIO ENGINE UOC:EFR	1
3	PAHZZ	9905-01-160-2693	19207	12314617	PLATE,IDENTIFICATIO ENGINE UOC:2CA	1
3	PAHZZ	9905-01-170-9979	19207	12314646	PLATE,IDENTIFICATIO ENGINE UOC:2DA	1
4	PAOZZ	5310-00-656-0111	80205	MS15795-703	WASHER,FLAT	4
5	PAOZZ	9905-00-407-5100	19207	10882827	PLATE,IDENTIFICATIO OIL GAGE ROD	1
6	PAOZZ	9905-00-407-5099	19207	10882826	PLATE,IDENTIFICATIO OIL FILLER TUBE	1
7	PAOZZ	5320-00-753-3830	96906	MS20613-4P5	RIVET,SOLID UOC:2DA	8
8	PAOZZ	9905-01-174-7499	19207	11684297	PLATE,INSTRUCTION WARNING UOC:2DA	2
9	PAHZZ	9905-01-292-9065	19207	12354391	PLATE,IDENTIFICATIO ENGINE HISTORICAL	1

END OF FIGURE

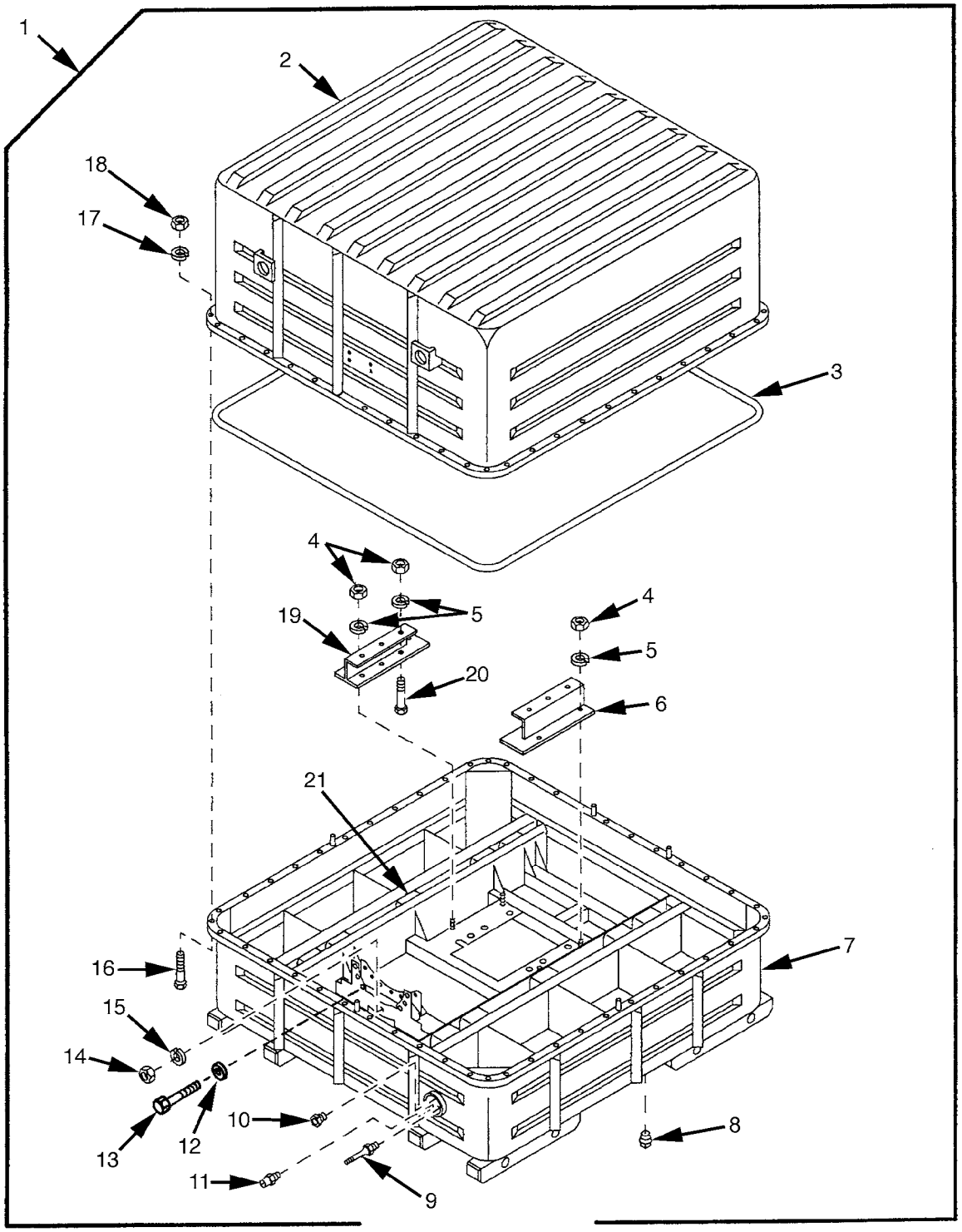

M78

FIGURE 78. ENGINE SHIPPING AND STORAGE CONTAINER

(1) ITEM NO.	(2) SMR CODE	(3) NSN	(4) CAGEC	(5) PART NUMBER	(6) DESCRIPTION AND USABLE ON CODES(UOC)	(7) QTY
					GROUP 33: SPECIAL PURPOSE KITS	
					GROUP 3301: REUSABLE SHIPPING CONTAINERS	
					FIG.78 ENGINE SHIPPING AND STORAGE CONTAINER	
1	PFFDD	8145-00-856-8147	19207	10912269	SHIPPING AND STORAG	1
2	XADZZ		19207	10912298	.CONTAINER ASSEMBLY	1
3	PFDZZ	5330-00-493-2938	19207	10912270	.GASKET	1
4	PADZZ	5310-00-763-8901	96906	MS51968-23	.NUT,PLAIN,HEXAGON	10
5	PADZZ	5310-00-584-7888	96906	MS35338-51	.WASHER,LOCK	10
6	XADZZ		19207	10951230	.BRACKET ENGINE	1
7	XADDD		19207	10912271	.CONTAINER ASSEMBLY	1
8	PADZZ	4730-00-221-2140	96906	MS20913-6S	.PLUG,PIPE	2
9	PADZZ	4820-00-620-8123	65493	C13A	.VALVE,SAFETY RELIEF	1
10	PADZZ	4820-00-242-4064	19207	8376442	.VALVE	1
11	PADZZ	6685-00-618-1822	00334	SK2155	.INDICATOR,HUMIDITY,	1
12	PADZZ	5310-00-209-0965	96906	MS35338-47	.WASHER,LOCK UOC:2CA,2DA	7
13	PADZZ	5305-01-510-4946	96906	MS35292-100	.SCREW,CAP,HEXAGON H UOC:2CA,2DA	7
14	PADZZ	5310-00-721-5940	96906	MS35690-725	.NUT,PLAIN,HEXAGON UOC:EFR	7
15	PADZZ	5310-00-834-7606	96906	MS35340-48	.WASHER,LOCK UOC:EFR	7
16	PAFZZ	5305-00-724-7223	80204	B1821BH063C225N	.SCREW,CAP,HEXAGON H	48
17	PAFZZ	5310-00-820-6653	80045	23MS35338-50	.WASHER,LOCK	48
18	PAFZZ	5310-00-763-8920	96906	MS51967-20	.NUT,PLAIN,HEXAGON	48
19	XADZZ		19207	10951231	.BRACKET ENGINE	1
20	PADZZ	5306-00-678-4262	19207	10863824	.BOLT,MACHINE	6
21	PBDZZ	5342-00-439-1759	19207	8380737	.MOUNT,RESILIENT	10

END OF FIGURE

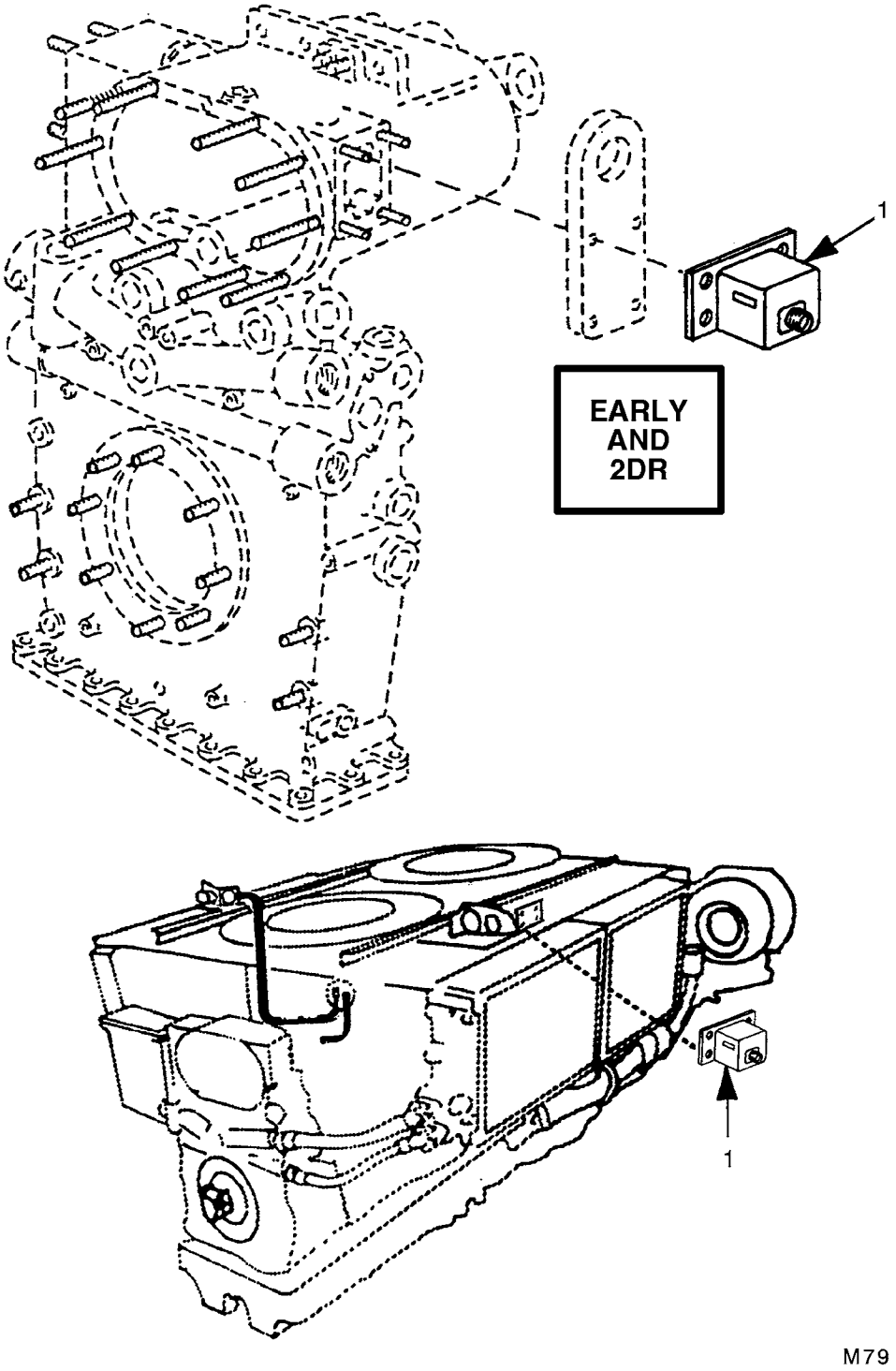

FIGURE 79. ENGINE TIME METER

(1) ITEM NO.	(2) SMR CODE	(3) NSN	(4) CAGEC	(5) PART NUMBER	(6) DESCRIPTION AND USABLE ON CODES(UOC)	(7) QTY
					GROUP 42: ELECTRICAL EQUIPMENT	
					GROUP 4210: INSTRUMENTS	
					FIG.79 ENGINE TIME METER	
1	PADZZ	6645-00-420-5072	19207	11640392	METER,TIME TOTALIZI	1
					END OF FIGURE	

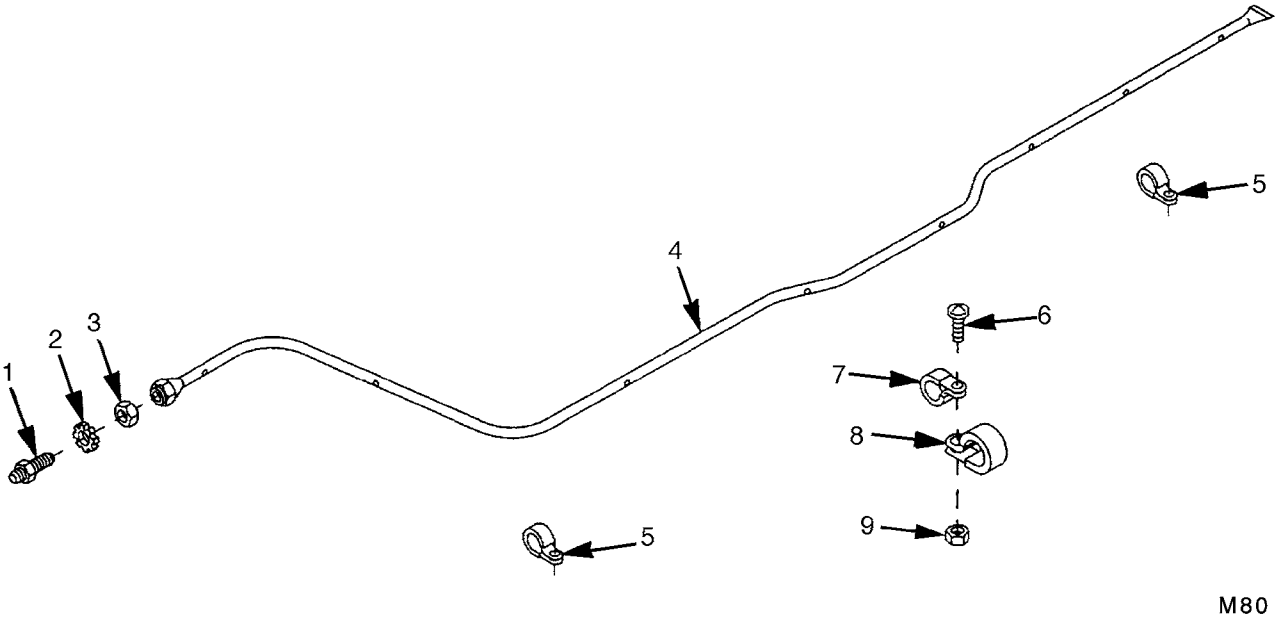

FIGURE 80. FIRE EXTINGUISHER TUBE

(1) ITEM NO.	(2) SMR CODE	(3) NSN	(4) CAGEC	(5) PART NUMBER	(6) DESCRIPTION AND USABLE ON CODES(UOC)	(7) QTY
					GROUP 76: FIRE FIGHTING EQUIPMENT COMPONENTS	
					GROUP 7639: FIXED FIRE FIGHTING EQUIPMENT (VEHICULAR)	
					FIG.80 FIRE EXTINGUISHER TUBE	
1	PAOZZ	4730-00-933-3138	19207	8761555	ADAPTER,STRAIGHT,PI	1
2	PAOZZ	5310-00-275-3683	96906	MS35335-40	WASHER,LOCK	1
3	PAOZZ	5310-00-208-5775	81343	AS5178-08	NUT,PLAIN,HEXAGON	1
4	PBOZZ	4710-00-150-6187	19207	8761131	TUBE ASSEMBLY,METAL	1
5	PAOZZ	5340-00-738-4968	19207	7384968	CLAMP,LOOP	2
6	PAOZZ	5305-00-993-1851	96906	MS35207-267	SCREW,MACHINE	1
7	PAOZZ	5340-00-057-2904	96906	MS21333-71	CLAMP,LOOP	1
8	PAOZZ	5340-00-989-9222	96906	MS21333-74	CLAMP,LOOP	1
9	PAOZZ	5310-00-877-5797	80205	MS21044N3	NUT,SELF-LOCKING,HE	1

END OF FIGURE

(1) ITEM NO.	(2) SMR CODE	(3) NSN	(4) CAGEC	(5) PART NUMBER	(6) DESCRIPTION AND USABLE ON CODES(UOC)			(7) QTY
					GROUP 94: REPAIR PARTS KITS AND SETS			
					GROUP 9401: REPAIR PARTS KITS			
					FIG.KITS (LISTED NUMERICALLY BY PART NUMBER)			
	PAHZZ	2815-01-318-5418	75370	F1682-80	RING SET,PISTON			V
					RING,PISTON	(12)	8-12	
					RING,PISTON	(12)	8-12	
					RING,PISTON	(12)	8-13	
	PAHZZ	3120-00-678-3230	19207	5702616	BEARING HALF SET,SL			V
					BEARING,HALF,SLEEVE	(1)	6-13	
					BEARING,HALF,SLEEVE	(6)	6-14	
					BEARING,HALF,SLEEVE	(6)	6-21	
					BEARING,HALF,SLEEVE	(1)	6-22	
	PAHZZ	3120-00-678-3229	19207	5702617	BEARING HALF SET,SL			V
					BEARING HALF,SLEEVE	(1)	6-13	
					BEARING HALF,SLEEVE	(6)	6-14	
					BEARING HALF, SLEEV	(6)	6-21	
					BEARING HALF,SLEEVE	(1)	6-22	
	PAHZZ	3020-00-679-8057	19207	5702619	GEAR SET,BEVEL,MATC			V
					GEAR SHAFT, BEVEL	(1)	10-31	
					GEAR BEVEL	(1)	10-39	
					GEAR SHAFT, BEVEL	(1)	11-13	
					GEAR BEVEL	(1)	11-34	
	PAHZZ	3020-00-678-7099	19207	5702621	GEAR SET,BEVEL,MATC			V
					GEARSHAFT,BEVEL	(1)	31-30	
					GEARSHAFT,BEVEL	(1)	31-31	
	PAHZZ	3040-00-678-3269	19207	5702622	GEARSHAFT,BEVEL,MAT			V
					GEARSHAFT,BEVEL	(1)	30-9	
					GEARSHAFT,BEVEL	(1)	30-10	
	PAHZZ	2910-00-545-1558	19207	5702641	PARTS KIT,AUTOMATIC			V
					SEAL	(8)	33-18	
					SPRING	(8)	33-19	
	PAFZZ	5365-00-235-1941	19207	5702674	SHIM SET			V
					SPACER,NOZZLE AND H	(1)	35-6	
					SHIM	(1)	35-6	
					SHIM	(1)	35-6	
					SHIM	(1)	35-6	
					SHIM	(1)	35-6	
	PAOZZ	4330-00-801-1152	19207	5702738	PARTS KIT,FLUID PRE			V
					O-RING	(1)	46-20	
					ELEMENT,FILTER	(2)	46-22	
	PAHZZ	3120-00-491-0314	19207	5704348	BEARING HALF SET,SL			V
					BEARING HALF,SLEEVE	(1)	6-13	
					BEARING HALF,SLEEVE	(6)	6-14	
					BEARING HALF,SLEEVE	(6)	6-21	
					BEARING HALF,SLEEVE	(2)	6-22	
	PAFZZ	3010-00-762-4587	19207	5704366	PARTS KIT,COUPLING,			V
					KEY,WOODRUFF	(2)	36-8	
					O-RING	(1)	36-13	
					O-RING	(2)	36-14	
					SPACER	(4)	36-19	
					WASHER,LOCK	(4)	36-20	
					BOLT	(4)	36-21	
	PAHZZ	3120-00-165-6010	19207	5704381	BEARING HALF SET,SL			V
					BEARING,HALF,SLEEVE	(1)	6-13	
					BEARING,HALF,SLEEVE	(1)	6-22	
	PAHZZ	3120-00-165-6011	19207	5704382	BEARING HALF SET,SL			V
					BEARING HALF,SLEEVE	(1)	6-13	
					BEARING HALF,SLEEVE	(2)	6-22	

(1) ITEM NO.	(2) SMR CODE	(3) NSN	(4) CAGEC	(5) PART NUMBER	(6) DESCRIPTION AND USABLE ON CODES(UOC)			(7) QTY
	XDHZZ		19207	5704383	BEARING HALF SET,SL			V
					BEARING HALF,SLEEVE	(1)	6-13	
					BEARING HALF,SLEEVE	(1)	6-22	
	XAFZZ		19207	5704471	GEAR SET,BEVEL,MATC			V
					UOC:EFR			
					GEARSHAFT,BEVEL	(1)	34-7	
					GEARSHAFT,BEVEL	(1)	34-19	
	PAHZZ	2815-00-410-1211	19207	5704475	RING SET,PISTON			V
					RING,PISTON	(12)	8-11	
					RING,PISTON	(12)	8-13	
	PAHZZ	2815-00-410-1236	19207	5704476	RING SET,PISTON			V
					RING, PISTON	(12)	8-11	
					RING,PISTON	(12)	8-12	
					RING,PISTON	(12)	8-13	
	PAHZZ	2815-00-410-1248	19207	5704477	RING SET,PISTON			V
					RING, PISTON	(12)	8-11	
					RING,PISTON	(12)	8-12	
					RING,PISTON	(12)	8-13	
	PAHZZ	2815-00-410-1956	19207	5704478	RING SET,PISTON			V
					RING, PISTON	(12)	8-11	
					RING,PISTON	(12)	8-12	
					RING,PISTON	(12)	8-13	
	PAHZZ	2815-00-410-1957	19207	5704479	RING SET,PISTON			V
					RING, PISTON	(12)	8-11	
					RING,PISTON	(12)	8-13	
	PAHZZ	3120-01-018-0192	19207	5704482	BEARING HALF SET,SL			V
					BEARING HALF,SLEEVE	(24)	8-7	
	PAHZZ	3120-00-410-1987	19207	5704483	BEARING HALF SET,SL			V
					BEARING HALF,SLEEVE	(24)	8-7	
	PAHZZ	3120-00-410-1988	19207	5704484	BEARING HALF SET,SL			V
					BEARING HALF,SLEEVE	(24)	8-7	
	PADZZ	3120-01-013-3629	19207	5704485	BEARING SET,SLEEVE			V
					BEARING,SLEEVE	(1)	19-10	
					BEARING,SLEEVE	(1)	19-15	
					BEARING,SLEEVE	(1)	19-17	
					BEARING,SLEEVE	(1)	19-41	
					BEARING,SLEEVE	(1)	19-47	
					BEARING,SLEEVE	(1)	19-51	
	PAOZZ	4330-00-397-3404	19207	5704486	PARTS KIT,FLUID PRE			V
					PACKING WITH RETAIN	(1)	14-5	
					GASKET	(1)	14-7	
					FILTER ELEMENT,FLUI	(2)	14-8	
	PAOZZ	4330-00-410-1964	19207	5704487	PARTS KIT,FLUID PRE			V
					WASHER,FLAT	(1)	46-4	
					GASKET	(1)	46-5	
					GASKET	(1)	46-7	
					FILTER ELEMENT,FLUI	(1)	46-9	
					O-RING	(1)	46-10	

(1) ITEM NO.	(2) SMR CODE	(3) NSN	(4) CAGEC	(5) PART NUMBER	(6) DESCRIPTION AND USABLE ON CODES(UOC)			(7) QTY
	PAHZZ	5330-01-026-9498	19207	5704488	GASKET AND PREFORME			V
					GASKET	(1)	1-1	
					GASKET	(1)	1-33	
					GASKET	(1)	10-1	
					O-RING	(1)	10-5	
					GASKET	(1)	10-15	
					GASKET	(1)	10-23	
					O-RING	(1)	10-27	
					O-RING	(1)	10-28	
					GASKET	(1)	11-8	
					O-RING	(1)	11-16	
					GASKET	(1)	11-21	
					SEAL,PLAIN ENCASED	(1)	11-25	
					O-RING	(1)	11-29	
					GASKET	(1)	11-41	
					O-RING	(1)	11-48	
					O-RING	(1)	11-49	
					GASKET	(2)	13-2	
					GASKET	(1)	13-5	
					GASKET	(1)	13-14	
					GASKET	(1)	13-18	
					O-RING	(1)	13-20	
					O-RING	(2)	14-9	
					O-RING	(3)	14-10	
					GASKET	(4)	14-11	
					PACKING,PREFORMED	(1)	15-4	
					PACKING,PREFORMED	(1)	15-11	
					PACKING WITH RETAIN	(3)	15-30	
					GASKET	(2)	15-31	
					O-RING	(2)	15-37	
					GASKET	(1)	15-38	
					GASKET	(2)	16-8	
					GASKET	(1)	16-10	
					GASKET	(1)	16-13	
					GASKET	(1)	16-16	
					O-RING	(2)	18-1	
					O-RING	(1)	18-2	
					GASKET	(1)	18-5	
					GASKET	(1)	18-14	
					GASKET	(2)	18-15	
					PACKING MATERIAL	(V)	2-11	
					WASHER,FLAT	(24)	20-2	
					GASKET	(4)	20-7	
					GASKET	(2)	21-12	
					O-RING	(2)	21-32	
					SPACER,RING	(4)	22-7	
					O-RING	(2)	22-9	
					O-RING	(1)	22-9	
					GASKET	(4)	22-14	
					O-RING	(2)	23-9	
					O-RING	(2)	23-9	
					GASKET	(8)	24-1	
					GASKET	(2)	24-6	
					GASKET	(2)	25-5	
					GASKET	(8)	25-10	
					GASKET	(4)	26-6	
					GASKET	(2)	26-16	
					PACKING,PREFORMED	(4)	26-23	
					O-RING	(4)	26-30	
					O-RING	(2)	27-4	
					O-RING	(1)	27-10	
					SEAL,PLAIN ENCASED	(1)	27-13	
					GASKET	(1)	27-16	
					SEAL,PLAIN ENCASED	(1)	27-24	
					GASKET	(1)	27-34	

(1) ITEM NO.	(2) SMR CODE	(3) NSN	(4) CAGEC	(5) PART NUMBER	(6) DESCRIPTION AND USABLE ON CODES(UOC)			(7) QTY
					O-RING	(2)	29-4	
					SEAL,PLAIN ENCASED	(1)	29-10	
					O-RING	(7)	29-19	
					PACKING WITH RETAIN	(2)	29-28	
					SEAL,PLAIN ENCASED	(1)	34-6	
					O-RING	(1)	34-18	
					O-RING	(1)	35-3	
					O-RING	(12)	35-8	
					GASKET	(1)	35-11	
					O-RING	(1)	36-2	
					O-RING	(1)	36-25	
					WASHER,FLAT	(24)	38-3	
					GASKET	(1)	39-19	
					GASKET	(2)	42-12	
					GASKET	(2)	42-15	
					O-RING	(2)	43-3	
					O-RING	(2)	43-15	
					O-RING	(1)	45-41	
					WASHER,FLAT	(1)	47-4	
					GASKET	(1)	47-36	
					WASHER,FLAT	(1)	48-19	
					GASKET	(1)	48-23	
					GASKET	(1)	49-38	
					SEAL,PLAIN ENCASED	(1)	49-48	
					SEAL,PLAIN ENCASED	(1)	49-54	
					GASKET	(1)	49-60	
					GASKET	(2)	50-10	
					GASKET	(2)	50-33	
					PACKING WITH RETAIN	(4)	5-7	
					O-RING	(12)	5-23	
					O-RING	(2)	30-15	
					O-RING	(1)	31-21	
					O-RING	(1)	31-24	
					O-RING	(2)	32-16	
					GASKET	(2)	32-20	
					SEAL,PLAIN ENCASED	(1)	32-22	
					GASKET	(1)	56-3	
					O-RING	(1)	57-5	
					O-RING	(1)	57-12	
					GASKET	(1)	58-17	
					GASKET	(1)	59-2	
					GASKET	(1)	6-11	
					SEAL,PLAIN	(1)	6-12	
					GASKET	(2)	9-1	
	PAOOO	5180-01-006-9708	19207	5704805	TOOL KIT,FULL TRACK			V
	PADZZ	4820-01-070-5945	19207	5705053	PARTS KIT,VALVE			V
					SPRING	(1)	40-1	
					VALVE,CONTROL	(1)	40-2	
					O-RING	(1)	40-3	
					O-RING	(1)	40-4	
					VALVE,SLEEVE	(1)	40-5	
					SPRING	(1)	40-6	
					GASKET	(1)	40-7	
	PAFZZ	3010-01-091-3200	19207	5705063	PARTS KIT,COUPLING,.....			V
					UOC:EFR			
					GASKET	(1)	34-20	
					NUT,SELF-LOCKING,HE	(1)	34-27	
					WASHER,FLAT	(1)	34-28	
					COUPLING,HALF,SH,PO	(1)	34-29	
					GEARSHAFT,SPUR	(1)	6-23	
	PAHZZ	2815-01-318-5419	19207	5705284	RING SET,PISTON			V
					RING, PISTON	(12)	8-11	
					RING,PISTON	(12)	8-12	
					RING,PISTON	(12)	8-13	

(1) ITEM NO.	(2) SMR CODE	(3) NSN	(4) CAGEC	(5) PART NUMBER	(6) DESCRIPTION AND USABLE ON CODES(UOC)			(7) QTY
	PAHZZ	2815-01-318-5420	19207	5705285	RING SET,PISTON			V
					RING, PISTON	(12)	8-11	
					RING,PISTON	(12)	8-12	
					RING,PISTON	(12)	8-13	
	PAHZZ	2815-01-318-5421	19207	5705286	RING SET,PISTON			V
					RING, PISTON	(12)	8-11	
					RING,PISTON	(12)	8-12	
					RING,PISTON	(12)	8-13	
	PAHZZ	2815-01-318-7913	19207	5705287	RING SET,PISTON			V
					RING, PISTON	(12)	8-11	
					RING,PISTON	(12)	8-13	
	PAHZZ	2910-01-509-6677	19207	5705288	PARTS KIT,FUEL INJE			V
					GASKET	(1)	35-11	

END OF FIGURE

(1) ITEM NO.	(2) SMR CODE	(3) NSN	(4) CAGEC	(5) PART NUMBER	(6) DESCRIPTION AND USABLE ON CODES(UOC)	(7) QTY
					GROUP 95: GENERAL USE STANDARDIZED PARTS	
					GROUP 9501: HARDWARE SUPPLIES AND BULK MATERIEL,COMMON	
					FIG.BULK BULK MATERIAL	
1	PAOZZ	4720-00-278-1113	80063	SCB85930	HOSE,NONMETALLIC ,1.00 ID	V
2	PCOZZ	4720-00-278-1110	50024	1631082	HOSE,NONMETALLIC ,1.75 ID	V
3	PAOZZ	5970-00-223-8318	81343	M23053/8-009-C	INSULATION SLEEVING ,HEAT SHRINKABLE,.750 ID,CLEAR	V
4	PAOZZ	5970-00-812-2969	81343	M23053/5-104-0	INSULATION SLEEVING ,HEAT SHRINKABLE,CLASS 1,.125 ID,BLACK	V
5	PAOZZ	5970-00-990-9912	81349	M23053/5-204-C	INSULATION SLEEVING ,HEAT SHRINKABLE,CLASS 2,.125 ID,CLEAR	V
6	PCOZZ	5970-00-088-2975	81343	M23053/5-104-9	INSULATION SLEEVING ,HEAT SHRINKABLE,CLASS 1,.125 ID,WHITE	V
7	PAOZZ	5970-00-814-2878	81343	M23053/5-106-9	INSULATION SLEEVING ,HEAT SHRINKABLE,CLASS 1,.250 ID,WHITE	V
8	PAOZZ	5970-00-935-0082	81343	M23053/8-006-C	INSULATION SLEEVING ,HEAT SHRINKABLE,.250 ID,CLEAR	V
9	PAOZZ	5970-01-510-2504	81349	M23053/8-109-0	INSULATION SLEEVING ,CLASS 1,.750 ID,BLACK	V
10	PAOZZ	5970-00-057-3545	81349	M23053/5-109-4	INSULATION SLEEVING ,HEAT SHRINKABLE,.750 ID,YELLOW	V
11	PAOZZ	5970-01-513-1424	81349	M23053/8-109-C	INSULATION SLEEVING ,HEAT SHRINKABLE,.750 ID,CLEAR	V
12	PAOZZ	5970-01-510-3657	81349	M23053/15-204-C	INSULATION SLEEVING ,HEAT SHRINKABLE,1.300 ID,CLEAR	V
13	PAOZZ	5970-00-914-3118	81349	M23053/5-109-9	INSULATION SLEEVING ,HEAT SHRINKABLE,.375 ID,WHITE	V
14	PAOZZ	5970-00-787-2321	81349	M23053/5-103-4	INSULATION SLEEVING ,HEAT SHRINKABLE,.046 ID,YELLOW	V
15	PAOZZ	5970-00-819-9569	81349	M23053/5-103-9	INSULATION SLEEVING ,HEAT SHRINKABLE,CLASS 1,.093 ID,WHITE	V
16	PAOZZ	5970-00-905-2068	81349	M23053/8-004-C	INSULATION SLEEVING ,HEAT SHRINKABLE,.375 ID,WHITE	V
17	PAOZZ	5970-01-510-2508	81349	M23053/8-205-0	INSULATION SLEEVING ,HEAT SHRINKABLE,.187 ID,BLACK	V
18	PAOZZ		81349	M23053/5-130-9	INSULATION SLEEVING ,CLASS 1,WHITE.	V
19	PCOZZ	5970-00-815-1300	81349	M23053/5-110-0	INSULATION SLEEVING ,HEAT SHRINKABLE,CLASS 1,1.00 ID,BLACK	V
20	PCOZZ	5970-00-813-2967	81349	M23053/5-108-0	INSULATION SLEEVING ,HEAT SHRINKABLE,CLASS 1,.500 ID,BLACK	V
21	PAOZZ	5970-01-510-4237	81349	M23053/18-206-0	INSULATION SLEEVING ,HEAT SHRINKABLE,CLASS 1,.250 ID,BLACK	V
22	PAOZZ	5970-00-063-1495	81349	M23053/1-103-0	INSULATION SLEEVING ,HEAT SHRINKABLE,CLASS 1,.500 ID,BLACK	V
23	PAOZZ	5970-00-063-1496	81349	M23053/1-105-0	INSULATION SLEEVING ,HEAT SHRINKABLE,CLASS 1,.750 ID,BLACK	V
24	PAOZZ	5970-01-149-7442	81349	M23053/8-109-9	INSULATION SLEEVING ,HEAT SHRINKABLE,.750 ID,WHITE	V
25	PAOZZ	5970-01-085-0673	81349	M23053/1-205-0	INSULATION,SLEEVING ,HEAT SHRINKABLE,.750 ID,BLACK	V
26	PCHZZ	9320-01-014-8683	19207	11678085-1	RUBBER SHEET,CELLUL ,.500 IN. THICK,TYPE S,CLASS SB,STYLE E,GRADE SBE7A1BC1F2L	V
27	XDOZZ		19207	11678085-2	RUBBER SHEET,CELLUL ,.250 IN. THICK,TYPE S,CLASS SB,STYLE E,GRADE SBE7A1BC1F2L	V
28	PAOZZ	4720-00-804-9249	83616	TD2-03420	TUBING,NONMETALLIC ,0.122 ID	V
29	PAOZZ	6145-00-161-1609	81349	M13486-1-3	WIRE,ELECTRICAL ,16 AWG,STRANDED SINGLE CONDUCTOR	V

(1) ITEM NO.	(2) SMR CODE	(3) NSN	(4) CAGEC	(5) PART NUMBER	(6) DESCRIPTION AND USABLE ON CODES(UOC)	(7) QTY
30	PAOZZ	6145-01-028-0985	81349	M81044/12-16-0	WIRE,ELECTRICAL ,16 AWG,STRANDED SINGLE CONDUCTOR	V
31	PAOZZ	6145-01-102-4660	19207	12293251-3	WIRE,ELECTRICAL ,0 AWG,SINGLE CONDUCTOR	V
32	PAOZZ	6145-00-152-6499	81349	M13486/1-5	WIRE,ELECTRICAL ,14 AWG,UNSHIELDED, SINGLE CONDUCTOR	V
33	PAOZZ	6145-00-705-6674	81349	M13486/1-14	WIRE,ELECTRICAL ,0 AWG,UNSHIELDED, SINGLE CONDUCTOR	V
34	PAOZZ	6145-00-699-8963	81349	M13486/1-1	WIRE,ELECTRICAL ,20 AWG,STRANDED SINGLE CONDUCTOR	V
35	PAHZZ	9525-00-355-6072	80205	NASM20995NC32	WIRE,NONELECTRICAL ,CLASS A, FORM 7 AND CONDITION ANNEALED	V
36	PAFZZ	9525-00-990-7799	80205	NASM20995NC40	WIRE,NONELECTRICAL ,CLASS A, FORM 7 AND CONDITION ANNEALED	V

END OF FIGURE

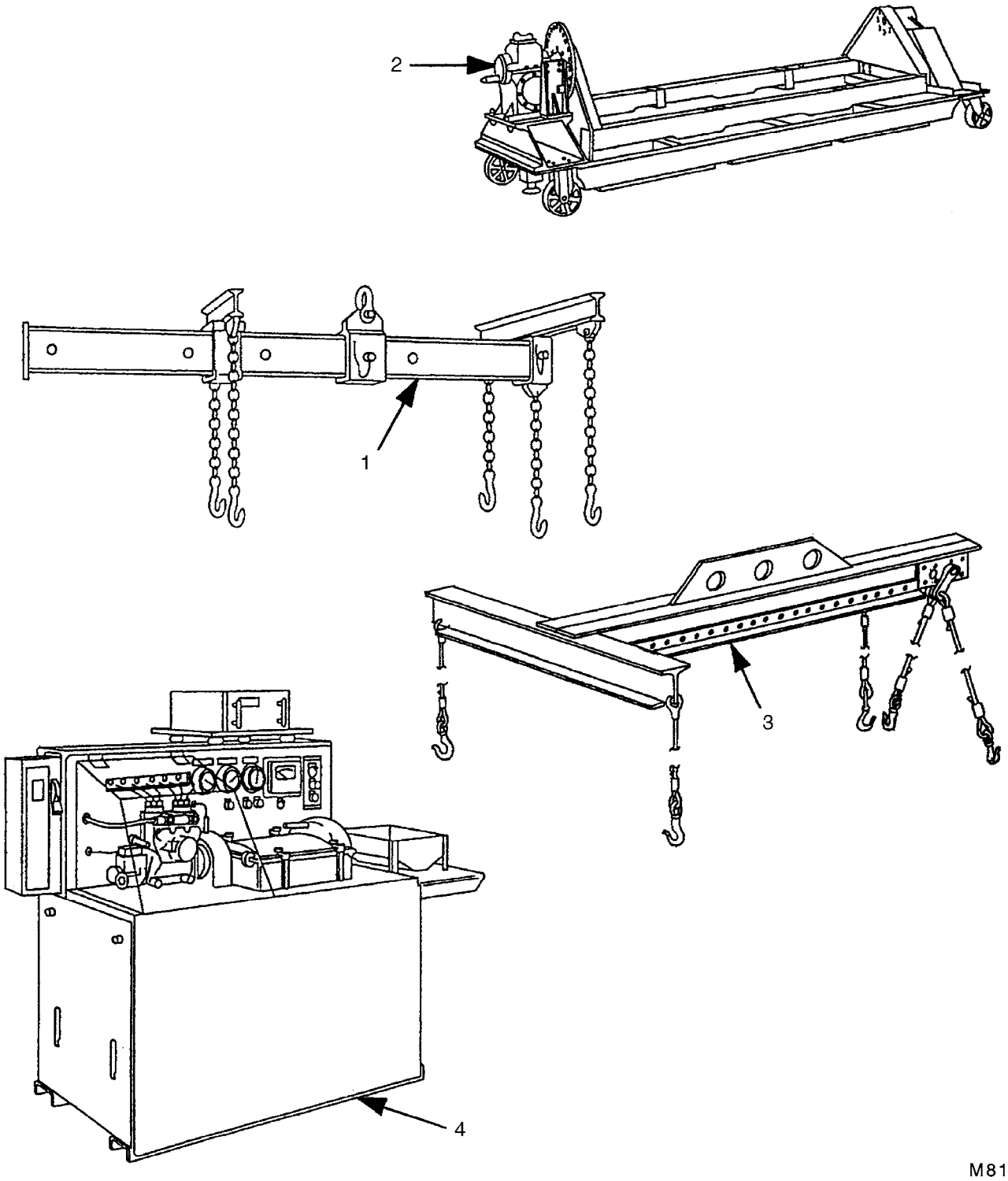

FIGURE 81. SPECIAL TOOLS AND EQUIPMENT

(1) ITEM NO.	(2) SMR CODE	(3) NSN	(4) CAGEC	(5) PART NUMBER	(6) DESCRIPTION AND USABLE ON CODES(UOC)	(7) QTY
					GROUP 26: TOOLS AND TEST EQUIPMENT	
					GROUP 2604: SPECIAL TOOLS	
					FIG. 81 SPECIAL TOOLS AND EQUIPMENT	
1	PEFZZ	3940-01-440-0283	19207	12366100	BEAM,HOISTING QTY:1 PER SET . . . . . UOC:EFR	
2	PEHZZ	4910-00-856-4137	19207	10912260	STAND,MAINTENANCE,A QTY:1 PER SET	
3	PEFZZ	4910-01-048-8706	19207	12257229	SLING,ENGINE AND TR . . . . . UOC:2CA,2DA BOI:1 PER LETTERED CO BOI:2 PER BN HQ WHEN BN HAS SVC CO BOI:1 PER HQ OF UNITS ABOVE BN LEVEL	
4	PEHZZ	4910-00-986-9873	19207	10898928	TESTER,DIESEL FUEL QTY:1 PER SET UOC:2CA,2DA	

END OF FIGURE

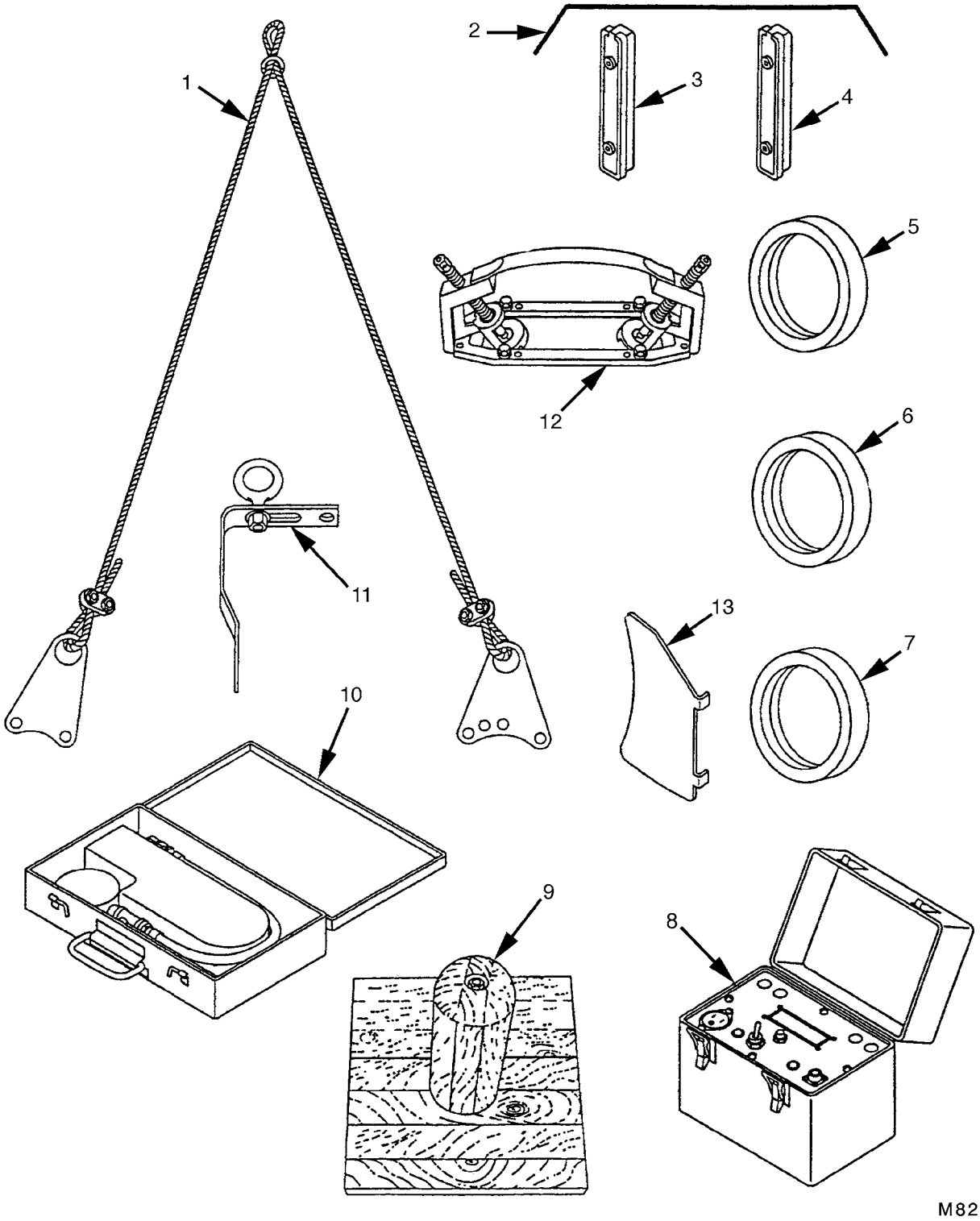

FIGURE82. SPECIAL TOOLS AND EQUIPMENT

(1) ITEM NO.	(2) SMR CODE	(3) NSN	(4) CAGEC	(5) PART NUMBER	(6) DESCRIPTION AND USABLE ON CODES(UOC)	(7) QTY
					GROUP 2604: SPECIAL TOOLS	
					FIG. 82 SPECIAL TOOLS AND EQUIPMENT	
1	PEHZZ	4910-00-795-7955	19207	10882958	SLING,CRANKSHAFT AN QTY:1 PER SET	
2	PEDDD	3460-00-689-3368	19207	5704380	STONE AND HOLDER,AS QTY:1 PER SET.	
3	XDDZZ		19207	11662775-2	.STONE AND HOLDER QTY:1 PER SET	
4	XDDZZ		19207	11662775-1	.STONE AND HOLDER QTY:1 PER SET	
5	PEHZZ	5220-00-988-8774	19207	10912589	GAGE,RING,PLAIN STANDARD AND .020 OVERSIZE; QTY:1 PER SET	
6	PEDZZ	5220-01-005-3003	19207	10912589-1	GAGE,RING,PLAIN .010 AND .030 OVERSIZE; QTY:1 PER SET	
7	PEHZZ	5220-01-005-3002	19207	10912589-2	GAGE,RING,PLAIN STANDARD AND .040 OVERSIZE; QTY:1 PER SET	
8	PEDZZ	6110-00-294-2332	19207	11668287	RESETTING DEVICE,PO QTY:1 PER SET.	
9	PEHZZ	4910-00-554-1317	19207	8708419	STAND,VALVE REMOVIN (USE WITH VALVE SPRING LIFTER P/N 8761535) QTY:1 PER SET.	
10	PEFZZ	4910-00-870-6283	19207	10899180	TESTER,CYLINDER COM (USE WITH COMPRESSION ADAPTER P/N 8743025) QTY:1 PER SET	
11	PEHZZ	4910-00-795-7954	19207	10882945	SLING ASSEMBLY,FAN QTY:1 PER SET.	
12	PEHZZ	5120-00-678-5285	19207	8761535	LIFTER,VALVE SPRING QTY:1 PER SET	
13	PEOZZ	5210-01-099-1477	19207	12275775	GAGE,FAN ROTOR QTY:1 PER SET	

END OF FIGURE

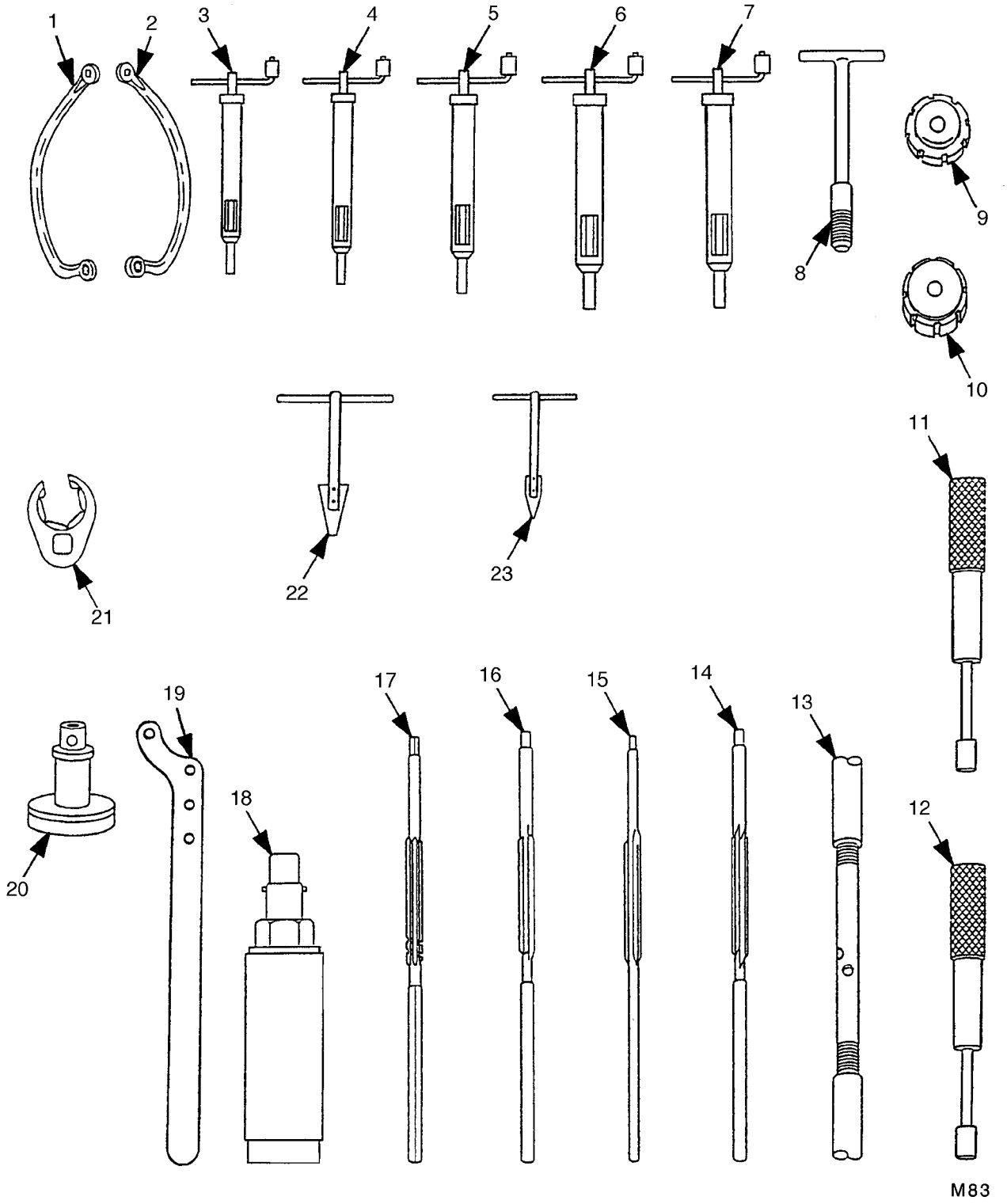

FIGURE 83. SPECIAL TOOLS AND EQUIPMENT

(1) ITEM NO.	(2) SMR CODE	(3) NSN	(4) CAGEC	(5) PART NUMBER	(6) DESCRIPTION AND USABLE ON CODES(UOC)	(7) QTY
					GROUP 2604: SPECIAL TOOLS	
					FIG. 83 SPECIAL TOOLS AND EQUIPMENT	
1	PEHZZ	5120-00-466-5948	19207	11684130-1	ADAPTER,TORQUE WREN LEFT AND RIGHT CYLINDER NUTS; QTY:1 PER SET	
2	PEHZZ	5120-01-018-8690	19207	11684130-2	ADAPTER,TORQUE WREN LEFT AND RIGHT CYLINDER NUTS; QTY:1 PER SET	
3	PEHZZ	5120-00-797-2405	01556	3552-5	INSERTER,SCREW THRE THREAD 5/16-24; QTY:1 PER SET	
4	PEHZZ	5120-00-710-7437	01556	7552-6	INSERTER,SCREW THRE THREAD 3/8-24; QTY:1 PER SET	
5	PEHZZ	5120-00-797-2407	01556	7552-7	INSERTER,SCREW THRE THREAD 7/16-20; QTY:1 PER SET	
6	PEHZZ	5120-00-672-8897	01556	7552-8	INSERTER,SCREW THRE THREAD 1/2-20; QTY:1 PER SET	
7	PEHZZ	5120-00-861-1170	01556	7551-8	INSERTER,SCREW THRE THREAD 1/2-13; QTY:1 PER SET	
8	PEHZZ	5120-00-678-5282	19207	8761297	PULLER,MECHANICAL QTY:1 PER SET	
9	PEHZZ	5365-00-460-5831	19207	11642088	BUSHING,REAMER,PI (USE WITH HAND REAMERS P/N 7083698 AND 7083699) QTY:1 PER SET	
10	PEHZZ	5365-00-003-1010	19207	11642089	BUSHING,PILOT,REAME (USE WITH HAND REAMERS P/N 7083696 AND 7083697) QTY:1 PER SET	
11	PEHZZ	5120-00-448-7993	19207	10883053	REPLACER,VALVE GUID QTY:1 PER SET	
12	PEHZZ	5180-00-448-0402	19207	10883052	TOOL KIT,VALVE SEAT QTY:1 PER SET	
13	PEHZZ	5120-00-575-7767	19207	8708361	JACK,SCREW,HAND (USE WITH SLIDE PULLER ASSY P/N 8708712 AND MECHANICAL ADAPTER P/N 8375091) QTY:1 PER SET	
14	PEHZZ	5110-00-708-3699	19207	7083699	REAMER,HAND (USE WITH BUSHING REAMER P/N 11642088) QTY:1 PER SET	
15	PEHZZ	5110-00-708-3698	19207	7083698	REAMER,HAND (USE WITH BUSHING REAMER P/N 11642088) QTY:1 PER SET	
16	PEHZZ	5110-00-708-3697	19207	7083697	REAMER,HAND (USE WITH PILOT BUSHING REAMER P/N 11642089) QTY:1 PER SET	
17	PEHZZ	5110-00-708-3696	19207	7083696	REAMER,HAND (USE WITH PILOT BUSHING REAMER P/N 11642089) QTY:1 PER SET	
18	PEFZZ	5120-01-119-4172	19207	12275805	PULLER,MECHANICAL QTY:1 PER SET	
19	PEFZZ	5120-01-043-5205	19207	12254282	WRENCH,SPANNER QTY:1 PER SET UOC:EFR	
20	PEFZZ	5120-01-034-1698	19207	12254213	SOCKET,SOCKET WRENC QTY:1 PER SET	
21	PEOZZ	5120-01-204-4469	55719	FRH-240S	CROWFOOT ATTACHMENT QTY:1 PER SET	
22	PEHZZ	5120-00-251-1527	19207	7751056	EXTRACTOR,SCREW THR 7/16 THROUGH 1.00; QTY:1 PER SET	
23	PEHZZ	5120-00-723-6833	01556	1227-6	EXTRACTOR,SCREW THR NO.10 THROUGH 3/8; QTY:1 PER SET	

END OF FIGURE

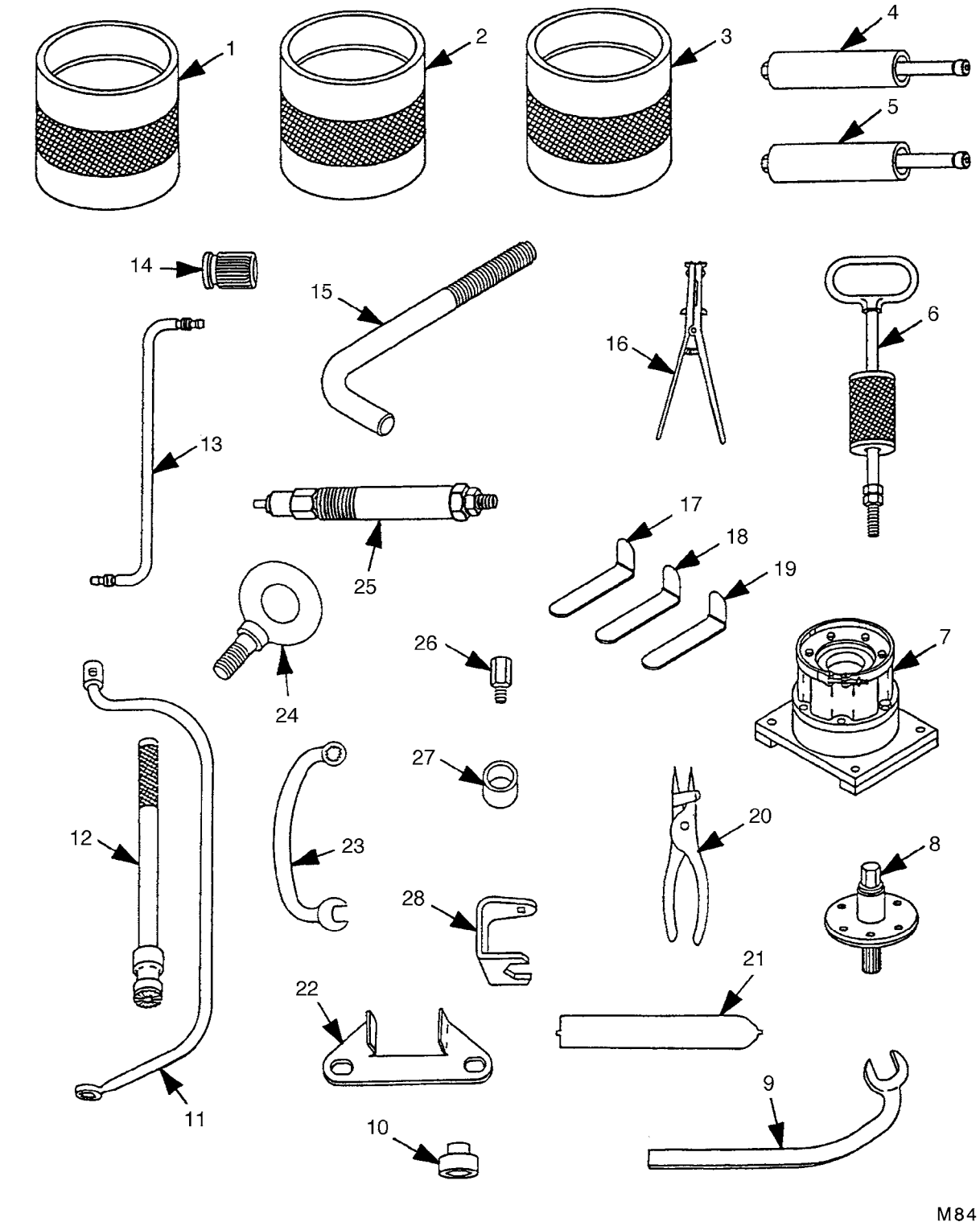

FIGURE 84. SPECIAL TOOLS AND EQUIPMENT

(1) ITEM NO.	(2) SMR CODE	(3) NSN	(4) CAGEC	(5) PART NUMBER	(6) DESCRIPTION AND USABLE ON CODES(UOC)	(7) QTY
					GROUP 2604: SPECIAL TOOLS	
					FIG. 84 SPECIAL TOOLS AND EQUIPMENT	
1	PEHZZ	5120-00-795-7956	19207	10882888	COMPRESSOR,PISTON R QTY:1 PER SET	
2	PEDZZ	5120-01-005-3001	19207	10882888-1	COMPRESSOR,PISTON R .010 AND .020 OVERSIZE; QTY:1 PER SET	
3	PEDZZ	5120-01-005-3000	19207	10882888-2	COMPRESSOR,PISTON R .030 AND .040 OVERSIZE; QTY:1 PER SET	
4	PEHZZ	5120-00-448-0401	19207	10882954	PULLER,VALVE GUIDE QTY:1 PER SET	
5	PEHZZ	5120-00-448-0400	19207	10882953	PULLER,VALVE GUIDE, QTY:1 PER SET	
6	PEHZZ	5120-00-310-4668	19207	8708712	PULLER ASSY,SLIDE H (USE WITH MECHANICAL ADAPTER P/N 8375091) QTY:1 PER SET	
7	PEDZZ	5120-01-005-2996	19207	11684166	HOLDING TOOL,GENERA (USE WITH GENERATOR TOOL P/N 11684153) QTY:1 PER SET UOC:2CA	
8	PEHZZ	5180-01-005-2995	19207	11684153	TOOL,GENERATOR COUP QTY:1 PER SET UOC:2CA	
9	PEOZZ	5120-00-678-5288	19207	8761568	WRENCH,OPEN END BOI:1 PER LETTERED CO BOI:1 PER BN HQ WHEN BN HAS SVC CO BOI:1 PER HQ OF UNITS ABOVE BN LEVEL	
10	PEFZZ	5120-00-875-9556	19207	11610171	SOCKET,SOCKET WRENC QTY:1 PER SET	
11	PEHZZ	5120-00-475-5414	19207	8761562	WRENCH,BOX QTY:1 PER SET	
12	PEFZZ	4910-00-795-7958	19207	10882949	CUTTER,CARBON,NOZZL QTY:1 PER SET	
13	PEFZZ	4710-00-795-7953	19207	10882963	TUBE ASSEMBLY,METAL QTY:1 PER SET	
14	PEFZZ	5120-00-793-7895	19207	10882747	WRENCH,SPLINE QTY:1 PER SET UOC:2CA,2DA	
15	PEOZZ	5120-00-473-7222	19207	5379997	PULLER,MECHANICAL BOI:3 PER BN HQ WHEN BN HAS SVC CO BOI:3 PER HQ OF UNITS ABOVE BN LEVEL	
16	PEHZZ	5120-00-494-1846	19207	7950177	REMOVER AND REPLACE PISTON RING; QTY:1 PER SET	
17	PEFZZ	5210-00-793-7899	19207	10882616	BLADE,THICKNESS GAG .025 THICK; QTY:1 PER SET	
18	PEFZZ	5210-00-793-7898	19207	10882615	BLADE,THICKNESS GAG .010 THICK; QTY:1 PER SET	
19	PEFZZ	5210-00-793-7897	19207	10882617	BLADE,THICKNESS GAG .100 THICK; QTY:1 PER SET	
20	PEHZZ	5120-00-752-9755	66503	WT28163	PLIERS,RETAINING RI QTY:1 PER SET	
21	PEFZZ	5120-01-039-2809	19207	12254244	WRENCH,OPEN END QTY:1 PER SET	
22	PEHZZ	4910-00-795-7951	19207	10882790	PROTECTOR,CRANKCASE QTY:1 PER SET	
23	PEOZZ	5120-00-789-4881	19207	10935476	WRENCH,BOX AND OPEN UOC:EFR,2DA BOI:1 PER LETTERED CO BOI:1 PER BN HQ WHEN BN HAS SVC CO BOI:1 PER HQ OF UNITS ABOVE BN LEVEL	
24	PEFZZ	5306-00-017-6143	96906	MS51937-7	BOLT,EYE QTY:1 PER SET	
25	PEFZZ	4910-00-795-7961	19207	8743025	ADAPTER,COMPRESSION (USE WITH CYLINDER TESTER P/N 10899180) QTY:1 PER SET	
26	PEHZZ	5120-00-837-5091	19207	7082204-A8375091	ADAPTER,MECHANICAL (USE WITH SLIDE PULLER P/N 8708712) BOI:1 PER BN HQ WHEN BN HAS SVC CO BOI:1 PER HQ OF UNITS ABOVE BN LEVEL	
27	PEOZZ	5365-00-795-7952	19207	10882651	SPACER,SLEEVE BOI:2 PER BN HQ WHEN BN HAS SVC CO BOI:2 PER HQ OF UNITS ABOVE BN LEVEL	
28	PEHZZ	5220-01-084-1230	19207	12254296	GAGE,RING,TAPER QTY:1 PER SET	

END OF FIGURE

STOCK NUMBER	FIG.	ITEM	STOCK NUMBER	FIG.	ITEM
4330-00-000-0145	14	8		11	6
5365-00-003-1010	80	10		15	29
5330-00-003-9302	14	5		49	19
4730-00-004-4265	48	36	5306-00-051-4077	63	5
5315-00-012-4553	27	36	5306-00-051-4081	37	17
5315-00-013-7214	55	24		41	32
5310-00-015-0214	11	2	5306-00-051-4084	20	11
5306-00-017-6143	81	24	5306-00-051-4087	5	8
5315-00-019-0777	27	37	5935-00-051-4146	72	45
2910-00-025-3493	45	38	4810-00-052-8002	11	33
5307-00-026-8489	19	39	5305-00-054-6652	50	1
2910-00-031-9083	45	42	5935-00-057-0746	71	3
4730-00-035-8036	41	17		72	24
	48	28	5340-00-057-2904	38	20
4730-00-038-7015	47	27		84	7
	48	1	5999-00-057-2929	69	2
	48	37	5340-00-057-3025	41	29
5305-00-042-5592	49	3		64	3
	62	17		66	3
5305-00-042-5594	50	36	5340-00-057-3029	63	12
5305-00-042-5640	22	1	5340-00-057-3034	45	26
	41	5		62	38
	50	21		63	1
	51	21		65	2
	52	12	5340-00-057-3037	41	14
	53	2		63	22
5306-00-042-5828	41	21	5340-00-057-3043	21	4
	45	53		62	37
	47	20		63	19
	48	39	5970-00-057-3545	BULK	10
4730-00-044-4035	12	17	4730-00-057-5557	57	4
4730-00-044-4689	17	5	5310-00-058-5811	51	2
	26	13	5315-00-058-9920	5	21
	26	28	5315-00-058-9929	2	17
	28	24		3	1
	29	26		4	15
	31	4		28	9
4730-00-044-4699	2	5		31	7
	4	16	5310-00-059-9264	24	17
	4	16		25	12
4730-00-044-4705	61	12	5305-00-060-9431	1	26
4730-00-044-4715	12	8	5310-00-061-1258	62	22
	17	13		66	8
5325-00-045-2676	55	13	5310-00-061-7325	41	20
	55	20		47	35
5310-00-045-3296	45	44		48	22
	62	10		61	1
	63	6	5310-00-062-4954	1	12
	65	8		42	38
5310-00-045-3299	62	8	5970-00-063-1495	BULK	22
	65	5	5970-00-063-1496	BULK	23
5306-00-050-1238	15	16	4710-00-063-8127	58	13
	18	10	2910-00-064-6262	35	13
	30	7	5340-00-067-3868	47	12
	31	35		48	11
	50	17		63	2
	58	9		65	1
	61	4	5305-00-068-0500	62	20
	62	14		63	13
	63	34		64	4
	65	13	5305-00-068-0511	62	21
	66	4	5305-00-068-0512	43	7
5340-00-050-2740	38	25		47	33
5340-00-050-9077	41	29		48	21
5305-00-051-4076	10	4	5306-00-068-0513	11	28

STOCK NUMBER	FIG.	ITEM	STOCK NUMBER	FIG.	ITEM
5306-00-068-0513	41	18	5340-00-107-4286	63	14
	49	35		64	6
	50	8	5331-00-108-5691	57	12
	61	6	5940-00-113-3145	70	15
5306-00-068-0514	41	4		70	47
5305-00-068-0515	58	19		70	56
5306-00-069-3019	50	22		72	30
5305-00-071-2506	51	18	5940-00-113-3147	75	10
	54	4	5940-00-113-9824	67	53
4710-00-071-8124	20	13		68	24
4710-00-073-5129	20	17	5340-00-114-0093	47	29
5975-00-074-2072	43	12		48	26
	45	13	5940-00-114-1315	67	54
	63	18		68	23
	64	13	4720-00-115-0170	41	7
	65	14	5310-00-115-1440	49	13
	66	1		49	45
5331-00-078-4866	35	8	5935-00-115-2306	70	16
5340-00-079-7837	47	38		70	32
	48	8	5935-00-115-2307	70	22
5310-00-080-6004	46	4		70	48
	58	4	5940-00-115-5001	70	2
5310-00-081-4219	22	2		70	36
	47	7		72	33
	48	49		72	46
	52	14	5940-00-115-5006	70	7
	58	11		74	14
5307-00-084-0628	5	16		75	19
5307-00-084-0629	5	16		76	8
5310-00-087-4652	46	8	4730-00-116-6686	23	10
5310-00-088-0552	1	11	2815-00-117-9337	47	1
	27	20	6150-00-118-8730	70	1
5310-00-088-0553	13	7	4730-00-122-0526	21	35
	15	32	5340-00-125-3891	10	2
	19	3		11	7
	21	18	4730-00-127-4461	41	25
	22	18	4330-00-134-4734	45	9
	26	5	5340-00-136-1201	10	38
	28	22		11	35
	38	8	5310-00-141-1795	11	27
	39	17		11	32
	42	16		33	35
	47	8		39	11
	48	50		49	62
	49	67	5315-00-141-6337	6	4
	52	13	5315-00-141-6338	6	4
	53	12	5365-00-141-6945	72	40
	56	12	5940-00-143-4794	68	21
	59	11		69	9
	62	29	3110-00-144-8518	19	56
	63	26	5310-00-145-1650	21	39
	66	2	4730-00-146-0333	38	30
5310-00-088-1251	37	32	9390-00-146-9334	67	12
5340-00-088-1254	63	30		68	9
5970-00-088-2975	BULK	6	5310-00-149-9116	36	23
5340-00-088-6655	45	1	4710-00-150-6187	84	4
5340-00-089-8830	54	19	2815-00-150-7405	5	1
5365-00-089-8836	35	5	2815-00-150-7406	9	12
5365-00-090-5426	67	20	2815-00-150-7407	9	11
	68	15	5340-00-151-5991	13	15
	69	24	5340-00-151-9651	21	27
5340-00-091-3790	38	27	6145-00-152-6499	BULK	32
	39	6	4730-00-153-7045	38	29
4730-00-096-8756	48	13	3110-00-155-6675	27	6
	48	32	3110-00-156-5443	27	31

STOCK NUMBER	FIG.	ITEM	STOCK NUMBER	FIG.	ITEM
5310-00-159-6495	19	55		50	23
6145-00-161-1609	BULK	29	5310-00-185-6426	19	54
5331-00-165-1975	35	3	4730-00-186-7798	41	23
3120-00-165-6010	KITS		4710-00-192-9436	15	28
3120-00-165-6011	KITS		5340-00-193-8211	53	17
5331-00-166-0980	21	32	3040-00-193-8213	49	15
	22	9	5310-00-194-0636	19	4
	22	9	5310-00-194-0637	48	43
	23	9	5330-00-196-6714	16	8
	23	9	3110-00-198-1085	49	46
5331-00-166-0993	18	2	5325-00-202-0194	8	9
5331-00-166-1063	57	5	2910-00-203-3322	45	40
5331-00-166-1072	13	20	5365-00-205-9307	26	22
5331-00-166-1076	14	9	5306-00-206-3850	7	4
5331-00-166-8403	14	10	5305-00-206-3851	15	6
5310-00-167-0721	62	35		15	14
	65	12	5307-00-207-8619	28	12
	66	6	5307-00-207-8620	28	12
5310-00-167-0818	41	22	5310-00-208-5775	38	35
	45	45		39	5
	47	19		84	3
	48	40	5365-00-209-0174	26	31
	54	13	5310-00-209-0786	48	42
5310-00-167-0820	2	15		51	22
	2	20		54	3
	5	4	5310-00-209-0965	1	13
	9	4		10	25
	10	3		11	31
	11	3		45	19
	13	16		82	12
	21	11	5310-00-209-1366	50	28
	21	19	2815-00-213-0834	5	1
	26	10	2815-00-213-0835	5	1
	28	23	2815-00-213-0836	5	1
	30	18	2815-00-213-0837	5	1
	32	24	4730-00-221-2140	82	8
	39	16	5315-00-223-6113	49	22
	45	5	4730-00-223-7014	10	16
	49	74		11	40
	55	16	5970-00-223-8318	BULK	3
5310-00-167-0823	42	37	5305-00-225-3843	46	17
5331-00-167-5112	18	1		49	76
5331-00-167-5114	35	10	5305-00-225-3844	63	29
5331-00-167-5157	26	30	5310-00-225-6409	34	27
5310-00-168-2906	5	22	5306-00-225-9086	6	9
4730-00-172-0058	36	6		15	35
5310-00-176-8108	33	34		18	17
5340-00-177-4213	2	8		19	2
4720-00-177-6186	21	7		53	3
2920-00-177-7844	27	25	5306-00-225-9088	21	25
4320-00-177-7918	11	22		45	48
4730-00-177-8243	26	11		62	33
2815-00-177-9162	29	20		63	25
5340-00-178-6077	62	32	5306-00-225-9089	2	21
3130-00-179-6656	33	36		10	14
5306-00-180-0238	55	2		11	1
9390-00-180-7289	67	27		32	25
	68	14		61	8
	72	18	5305-00-225-9091	45	31
	74	9		49	71
5306-00-182-2029	32	12		62	2
5325-00-182-4707	53	14	5305-00-225-9092	5	3
5310-00-184-8974	14	4		9	3
	42	9	5305-00-225-9093	37	23
5310-00-184-8992	22	6	5306-00-225-9100	49	64

STOCK NUMBER	FIG.	ITEM	STOCK NUMBER	FIG.	ITEM
5306-00-225-9107	45	3		63	31
5305-00-227-1543	48	48	5305-00-269-3242	19	43
3110-00-227-3620	49	5		56	14
	49	59	5305-00-269-3243	42	25
2815-00-230-3593	1	34	5305-00-269-3245	55	4
4730-00-231-4010	45	54	5307-00-272-6331	2	16
5365-00-232-6019	1	3		26	15
	1	30		26	27
5315-00-234-1863	42	33		28	2
5315-00-234-1864	2	26		31	3
5365-00-235-1941	KITS		5307-00-272-6332	2	16
5935-00-235-8970	68	18		26	15
5340-00-238-9191	6	10		26	27
5315-00-238-9239	2	29		28	2
4730-00-239-2503	47	26		31	3
	48	2	4720-00-274-9335	39	9
5310-00-239-5848	29	14	4720-00-274-9356	39	33
5315-00-239-8019	34	11	5310-00-274-9364	52	35
5315-00-241-2916	28	11	3120-00-275-1610	9	28
4820-00-242-4064	82	10	5310-00-275-3683	38	36
5340-00-242-5601	58	21		39	4
4730-00-245-8162	58	16		84	2
5331-00-248-3850	46	10	5325-00-276-6096	42	47
5340-00-248-4631	32	17		52	37
5120-00-251-1527	80	22	4730-00-277-1987	21	21
4730-00-253-4413	61	14	4730-00-277-2448	57	8
5305-00-253-5618	77	1	4720-00-278-1110	BULK	2
5935-00-257-1024	67	18	4720-00-278-1113	BULK	1
	68	12	4730-00-278-2966	2	9
	69	23		12	12
5325-00-260-4875	27	5	4730-00-278-3888	61	10
5310-00-262-6375	30	19	4730-00-278-3912	61	15
5307-00-264-2472	10	35	5935-00-280-2192	72	38
	11	10	5325-00-281-2929	30	1
	12	2		31	25
	28	21	5340-00-281-4425	64	12
5331-00-265-1089	45	34	5315-00-282-0341	36	8
5305-00-267-8952	48	41	5340-00-282-7509	39	22
	63	8	5340-00-282-7548	50	40
5305-00-267-8960	54	17	5330-00-286-9942	49	48
5305-00-267-8965	15	39	5365-00-287-0094	22	10
5305-00-269-2803	42	31		22	10
	42	42		23	8
	62	6	4730-00-289-2357	12	16
5330-00-269-2844	13	2	5325-00-290-1960	64	1
5305-00-269-3234	16	2	5330-00-291-1720	1	19
	51	5	5330-00-291-2830	11	25
5305-00-269-3235	15	27	5325-00-291-3488	5	15
	58	6	5325-00-291-3492	3	19
5305-00-269-3236	15	23	5325-00-291-3493	55	12
	18	4		55	19
5305-00-269-3237	29	18	5325-00-291-3495	3	10
	51	33		28	10
5305-00-269-3238	15	25		31	11
	24	8	5330-00-292-7363	2	11
	25	2	6110-00-294-2332	79	8
	31	15	5331-00-297-9990	11	29
	42	6	5310-00-298-9252	38	12
5305-00-269-3239	14	3	5120-00-310-4668	81	6
	56	8	5940-00-314-0479	72	28
5305-00-269-3240	24	20	5342-00-318-7545	1	4
	25	16		1	28
	55	5	4730-00-322-8456	57	18
5305-00-269-3241	59	8	5935-00-333-3088	67	3
	62	28		69	20

STOCK NUMBER	FIG.	ITEM	STOCK NUMBER	FIG.	ITEM
5310-00-333-7348	1	22	5340-00-397-3271	1	21
	10	11	5340-00-397-3283	62	16
	11	5	2815-00-397-3305	18	9
	14	13	5340-00-397-3313	52	43
	14	13	2815-00-397-3314	13	10
	16	21	2815-00-397-3316	8	10
	18	13	5342-00-397-3317	61	2
	19	44	3040-00-397-3319	27	35
	27	18	2520-00-397-3324	22	4
	28	15	2990-00-397-3374	24	16
	29	2	2990-00-397-3383	25	14
	31	14	4330-00-397-3404	KITS	
	34	24	2920-00-398-6540	56	5
	55	10	3020-00-398-6713	27	33
5935-00-333-9414	67	29	5342-00-398-7102	45	46
	71	15	5995-00-399-5298	73	1
4710-00-350-9399	30	22	5340-00-399-5300	42	26
2930-00-350-9401	55	3	5340-00-399-5301	52	3
9525-00-355-6072	BULK	35	2590-00-399-5302	15	34
5999-00-368-4852	71	5		15	34
	72	22	4710-00-399-5304	47	10
	74	5	3040-00-399-5305	49	25
2990-00-369-8766	48	15	5940-00-399-6676	67	10
4730-00-375-6403	41	12		68	7
2815-00-388-9988	24	15		69	8
2815-00-388-9992	25	17		70	23
5342-00-388-9993	51	29		70	51
5342-00-388-9994	51	20		71	31
2990-00-389-0197	25	8		73	12
2815-00-392-9420	24	2	5310-00-401-0825	27	2
2815-00-392-9426	25	11	4710-00-401-4368	21	8
4320-00-392-9514	22	17	2930-00-402-4420	51	45
	22	17	2930-00-402-4421	51	19
5340-00-392-9515	52	15	3040-00-402-4422	36	3
5340-00-392-9547	52	27	3040-00-402-4429	49	66
2930-00-392-9555	22	3	2530-00-402-4430	42	23
2930-00-392-9559	22	19	3040-00-402-4431	49	73
5342-00-392-9564	22	20	2990-00-402-4432	42	30
5342-00-392-9588	22	23	2990-00-402-4433	42	27
2940-00-392-9633	12	23		42	34
5310-00-393-6685	67	21	5340-00-402-4435	54	10
	68	16	4730-00-402-5143	39	10
	69	25	5340-00-402-5204	59	6
5342-00-394-9690	63	27	5310-00-402-8379	29	6
4820-00-394-9693	13	19	5365-00-402-8380	13	9
3040-00-394-9695	33	3	2815-00-404-7444	7	2
5340-00-394-9700	52	9	5306-00-406-1542	6	8
5342-00-394-9701	62	30	4730-00-406-4609	26	18
2815-00-394-9702	8	1	4730-00-406-4610	42	13
2815-00-394-9703	8	16	4730-00-406-4611	42	19
2815-00-394-9705	16	1	4710-00-406-4614	42	20
5340-00-394-9706	52	1	2910-00-406-4615	15	8
2815-00-394-9707	51	8	4310-00-406-4619	13	13
2520-00-394-9713	52	38	2590-00-406-4621	15	1
2520-00-394-9714	22	22	4710-00-406-4622	20	15
5340-00-394-9717	22	5	4710-00-406-4623	20	10
2815-00-394-9719	10	20	4730-00-406-7307	26	7
	11	18	4730-00-406-7308	26	17
2510-00-394-9722	10	22	5310-00-406-7319	33	1
	11	20	9905-00-407-5099	77	6
5330-00-394-9723	16	19	9905-00-407-5100	77	5
2815-00-394-9725	10	32	2805-00-407-6761	10	19
2815-00-394-9726	11	9		11	17
2815-00-394-9729	2	1		11	17
5340-00-397-3269	1	24	5365-00-407-7003	54	16

STOCK NUMBER	FIG.	ITEM	STOCK NUMBER	FIG.	ITEM
5365-00-407-7011	30	3	6150-00-423-3622	72	1
	31	27	4730-00-423-3677	13	17
5310-00-407-9566	10	13	6150-00-423-3850	45	51
	15	36	5945-00-423-3869	47	44
	18	11	5340-00-423-3976	18	16
	20	8	6680-00-423-4051	15	33
	24	12	3120-00-423-4100	8	6
	25	19	5340-00-423-4104	49	75
	26	3	2815-00-427-0551	8	10
	45	4	2815-00-427-0553	8	10
	49	18	5340-00-427-0584	45	18
	49	63	4730-00-430-3165	48	30
	50	16	4730-00-431-9307	43	14
	58	10	5340-00-432-0056	52	40
	62	15	4720-00-432-1334	50	6
	63	20	5325-00-432-4724	67	42
	66	12	2815-00-434-6593	8	10
5365-00-408-1268	9	20	2815-00-434-6594	8	10
4710-00-408-4684	30	16	2520-00-435-4564	32	1
5342-00-409-1483	42	41	2930-00-435-4568	32	11
4730-00-409-3893	39	15	2520-00-435-4572	32	7
5340-00-409-8130	19	5	2930-00-436-3207	51	40
5340-00-410-1045	52	8	5330-00-438-1861	27	16
5330-00-410-1050	16	5	5342-00-439-1759	82	21
5340-00-410-1125	51	34	2920-00-441-8137	56	1
2815-00-410-1131	53	8	6115-00-442-5894	51	37
3040-00-410-1135	29	5	5340-00-442-5895	55	18
2815-00-410-1143	16	17	5340-00-447-3661	48	38
5340-00-410-1151	45	37	5120-00-448-0400	81	5
4330-00-410-1165	45	30	5120-00-448-0401	81	4
4720-00-410-1180	58	2	5180-00-448-0402	80	12
3040-00-410-1182	49	4	5120-00-448-7993	80	11
4720-00-410-1184	21	37	4730-00-448-9896	12	14
2815-00-410-1196	16	6	5340-00-449-2580	58	12
2815-00-410-1211	KITS		5340-00-453-5376	53	16
4330-00-410-1212	45	55	2990-00-453-5386	42	39
5340-00-410-1216	33	28	5340-00-453-5387	42	24
4710-00-410-1218	48	10	5306-00-453-5589	59	3
4710-00-410-1222	45	56	5340-00-453-5595	58	22
4720-00-410-1231	21	40	5340-00-454-8599	9	2
6150-00-410-1232	75	11	2920-00-455-5835	56	11
3040-00-410-1234	49	33		59	10
2815-00-410-1236	KITS		2815-00-455-9496	10	7
2815-00-410-1248	KITS			11	42
2815-00-410-1956	KITS		5340-00-456-1798	58	14
2815-00-410-1957	KITS		4730-00-457-1984	21	3
4710-00-410-1963	18	3	9390-00-458-0130	74	8
4330-00-410-1964	KITS		4720-00-459-2835	21	28
6150-00-410-1975	47	32	5365-00-460-5831	80	9
	48	24	4720-00-461-9797	39	1
2815-00-410-1976	74	1	3110-00-462-0392	32	10
5360-00-410-1983	33	24	5935-00-462-2913	67	36
3120-00-410-1987	KITS		5120-00-466-5948	80	1
3120-00-410-1988	KITS		5340-00-466-7464	62	13
5307-00-410-5830	3	11	4730-00-466-7465	45	22
5360-00-410-5836	15	5	4730-00-466-7467	45	20
	15	13	5340-00-466-7850	49	68
5330-00-410-9803	15	38	4820-00-467-2578	47	43
5330-00-411-2513	1	1	4730-00-467-2601	41	38
3040-00-411-5749	30	17	2815-00-467-3407	8	8
2990-00-411-8330	58	3	2520-00-467-3420	51	41
5306-00-413-4373	56	9	5340-00-468-1596	12	29
4720-00-420-4396	39	20	5120-00-473-7222	81	15
6645-00-420-5072	83	1	4720-00-475-3435	38	4
5340-00-423-3618	51	41	5120-00-475-5414	81	11

STOCK NUMBER	FIG.	ITEM	STOCK NUMBER	FIG.	ITEM
5340-00-475-8216	63	33	3130-00-498-9359	30	12
5340-00-475-8217	22	24		31	33
6150-00-476-0371	62	23	5995-00-499-1782	56	16
6150-00-476-0381	62	25	4730-00-501-7013	57	16
5310-00-477-0789	12	25	5995-00-507-7779	75	1
4710-00-477-9899	20	19	5935-00-509-6194	67	2
4710-00-477-9900	20	12		70	9
3110-00-481-2825	30	5		70	43
	31	37		70	60
5330-00-483-9490	18	14		72	27
5342-00-484-0771	49	79		73	5
5999-00-485-8955	67	19	5360-00-510-4109	12	26
	67	26	3120-00-510-4115	19	59
	68	13	5325-00-514-2321	10	9
	71	6		11	43
	72	21	5310-00-514-6674	23	1
	74	6		45	47
2815-00-485-9555	20	14		61	3
5330-00-486-0302	16	16		62	1
5330-00-486-0320	12	24		63	4
5330-00-486-0346	16	13	4330-00-516-1265	12	27
5330-00-486-0372	49	26	3110-00-516-5490	27	8
5310-00-486-0399	8	2	5365-00-518-5041	16	14
5306-00-486-0402	8	4	4730-00-522-1909	47	17
5365-00-486-0405	52	36	2805-00-522-2576	51	36
5310-00-486-0406	51	10	5975-00-522-7125	67	5
	51	27	3120-00-529-8347	49	81
	52	7	3110-00-529-9480	33	9
	52	11	5305-00-531-1097	24	7
	52	17		24	7
	52	33		25	3
	53	5		25	3
	53	11	5999-00-532-0264	67	40
	53	20	5340-00-533-3888	33	29
	53	23	5365-00-533-6657	21	13
5310-00-486-0412	51	9	5935-00-534-7553	67	11
	51	9	5310-00-535-6688	39	24
	51	32	4730-00-541-2745	61	17
	52	21	4730-00-541-7749	24	4
	52	26		25	4
	52	29	4730-00-542-5906	21	34
4810-00-487-2775	41	24	5305-00-543-2752	62	4
	45	52	2910-00-545-1558	KITS	
2920-00-487-9461	61	7	5310-00-550-1130	61	5
2815-00-489-2575	1	2		63	9
5310-00-489-5663	64	10	5935-00-553-3093	69	15
5935-00-489-6784	67	24	4910-00-554-1317	79	9
	76	3	3110-00-554-5302	30	11
4730-00-489-8216	61	20		31	34
5340-00-490-0872	2	10	4730-00-555-1764	38	24
4730-00-490-2172	10	30	3110-00-555-5207	32	19
	11	14	4730-00-555-8291	12	19
2815-00-490-5551	51	15		17	8
3120-00-491-0314	KITS		5325-00-558-8482	16	7
5340-00-492-1561	16	4	4710-00-561-7705	20	12
5330-00-492-1774	27	13	4730-00-561-7801	42	19
5330-00-492-1776	27	24	2990-00-563-6905	7	8
5330-00-492-1777	18	5	5340-00-563-6951	39	29
5330-00-492-1784	18	15	5340-00-564-9676	49	61
5330-00-493-2938	82	3	5935-00-572-9180	69	4
5310-00-493-4020	1	18	3020-00-573-4568	34	15
3120-00-493-9192	2	6	5307-00-573-5569	19	36
5120-00-494-1846	81	16	5120-00-575-7767	80	13
5340-00-498-2398	27	17	5331-00-576-9732	29	4
5330-00-498-6341	42	46	5331-00-579-3156	36	2

STOCK NUMBER	FIG.	ITEM	STOCK NUMBER	FIG.	ITEM
5331-00-579-6861	27	10		67	34
5331-00-579-7545	36	13		67	49
5331-00-579-7918	10	5		71	22
	11	48	5305-00-655-6556	45	43
5331-00-582-2133	10	27	5310-00-655-9370	27	23
	11	49	5310-00-655-9590	36	10
	31	24	5310-00-655-9859	27	15
5331-00-582-2855	36	25	5310-00-655-9860	67	51
5310-00-582-5965	39	12		71	17
	43	6	5310-00-655-9975	51	12
	46	18	5310-00-656-0067	70	18
	49	36		70	34
	50	9		70	64
	51	17		71	32
	58	18	5310-00-656-0111	77	4
	62	19	5310-00-660-3381	27	12
	63	16	5975-00-660-5962	70	25
	64	7		70	49
5325-00-582-7256	5	20	5325-00-663-1245	32	5
	17	2	5120-00-672-8897	80	6
5970-00-583-1814	76	7	5306-00-678-1885	54	18
5310-00-584-5272	36	5	5330-00-678-3171	34	20
5310-00-584-7888	36	9	2815-00-678-3194	9	26
	82	5	2815-00-678-3195	9	17
5331-00-585-6663	29	19	3120-00-678-3196	9	27
5330-00-586-6071	49	60	3120-00-678-3197	9	18
5315-00-586-6076	49	57	2815-00-678-3198	5	17
5305-00-588-2959	42	8	2815-00-678-3199	5	17
4730-00-595-1868	61	19	2815-00-678-3200	5	10
5340-00-596-4020	49	11	2815-00-678-3201	5	10
5330-00-599-0942	15	4	2815-00-678-3202	5	17
	15	11	2815-00-678-3203	5	10
5331-00-599-2934	31	21	5360-00-678-3207	9	8
4720-00-601-9351	21	29	5360-00-678-3208	9	9
2990-00-604-7366	24	14	5360-00-678-3209	9	7
5935-00-605-9322	67	33	2815-00-678-3218	13	4
5305-00-614-0245	65	7	5360-00-678-3222	13	12
5305-00-614-0274	62	3	2815-00-678-3223	13	11
	63	3	2815-00-678-3227	2	28
5935-00-614-9136	67	8	5307-00-678-3228	3	11
5970-00-615-8884	67	35	3120-00-678-3229	KITS	
5310-00-616-3554	60	2	3120-00-678-3230	KITS	
5315-00-616-5526	49	32	3040-00-678-3255	30	23
5310-00-616-6354	41	11	5360-00-678-3256	32	15
4730-00-617-8626	34	21	5310-00-678-3257	55	7
6685-00-618-1822	82	11	3040-00-678-3265	30	13
4730-00-618-5372	21	1	3040-00-678-3266	55	8
4820-00-620-8123	82	9	5340-00-678-3267	32	21
5305-00-622-9476	65	3	3040-00-678-3269	KITS	
5935-00-624-7660	75	2	5330-00-678-3270	24	6
5325-00-634-7860	4	13		25	5
5310-00-637-3057	26	32	5365-00-678-3271	30	8
5310-00-637-9541	15	24		31	29
	16	22	5360-00-678-3276	13	8
	36	20	4720-00-678-3285	39	7
	42	5	4730-00-678-3299	38	1
	51	4	4730-00-678-3303	14	12
	55	1	5325-00-678-3309	3	3
	58	5	5325-00-678-3310	5	13
	62	5	5325-00-678-3311	3	2
	62	26		3	18
5307-00-638-7608	28	8		5	9
4730-00-647-3207	47	9		5	19
	48	51		17	3
6150-00-651-4079	67	7		31	19

STOCK NUMBER	FIG.	ITEM	STOCK NUMBER	FIG.	ITEM
5307-00-678-3314	5	12		28	19
5306-00-678-3316	5	6	5307-00-678-6884	28	13
5307-00-678-3320	31	10	5307-00-678-6885	28	13
5307-00-678-3321	31	10	5307-00-678-6887	29	21
5306-00-678-3325	55	15	5307-00-678-6888	29	21
5307-00-678-3328	31	23	5306-00-678-6889	59	4
5307-00-678-3329	31	23	5307-00-678-6890	29	24
5307-00-678-3509	3	22	5307-00-678-6891	29	24
5307-00-678-3510	3	22	3020-00-678-7099	KITS	
5307-00-678-3513	4	14	5330-00-678-7101	59	2
5307-00-678-3514	4	14	5340-00-679-1591	9	13
5307-00-678-3515	4	1	5330-00-679-4961	15	31
5307-00-678-3516	4	1	5360-00-679-4964	19	24
5307-00-678-3517	4	5	5360-00-679-4966	19	23
5307-00-678-3518	4	5	4710-00-679-5664	26	19
5307-00-678-3519	4	6	4710-00-679-5665	26	9
5307-00-678-3520	4	6	4710-00-679-5666	26	8
5307-00-678-3521	4	7	4710-00-679-5667	26	20
5307-00-678-3522	4	7	4710-00-679-5668	26	2
5307-00-678-3523	4	4	4730-00-679-5682	20	1
5307-00-678-3524	4	4	5307-00-679-5684	26	25
5307-00-678-3525	3	21	5310-00-679-5685	20	2
5307-00-678-3526	3	21	2930-00-679-5742	55	9
5307-00-678-3527	3	8	5330-00-679-7063	26	6
	3	8	5330-00-679-7064	26	16
5307-00-678-3528	3	8	2815-00-679-8053	10	40
	3	8	5330-00-679-8054	10	1
5307-00-678-3529	4	2		11	8
5307-00-678-3530	4	2	3020-00-679-8057	KITS	
5306-00-678-3531	16	23	2815-00-679-8058	10	6
5342-00-678-3532	1	8		11	47
	1	31	5330-00-679-8059	10	23
5307-00-678-3535	3	4		11	21
5307-00-678-3536	3	4	2815-00-679-8090	54	7
3040-00-678-4233	27	29	2805-00-679-8091	54	9
3040-00-678-4236	27	28	2805-00-679-8092	54	11
3020-00-678-4238	27	14	2815-00-679-8093	54	8
3020-00-678-4239	27	32	3120-00-679-8098	11	23
3040-00-678-4246	33	7	5325-00-679-8116	10	33
5325-00-678-4257	33	10		11	12
5365-00-678-4258	74	7	4730-00-679-9280	45	24
5306-00-678-4260	36	24	5310-00-679-9880	26	21
5306-00-678-4262	82	20	5325-00-680-8768	12	28
5330-00-678-4669	22	14	5325-00-682-1619	33	32
5330-00-678-4676	42	12	5315-00-682-1746	49	56
5330-00-678-4681	42	15	5365-00-682-2043	71	7
5330-00-678-4695	47	36		72	19
	48	23	5307-00-682-5820	42	28
3010-00-678-4725	36	11		42	36
4820-00-678-4729	33	23	4820-00-684-0880	45	21
5365-00-678-4730	33	8	5305-00-685-3510	24	13
5330-00-678-4734	29	10		25	9
5120-00-678-5282	80	8	5935-00-686-2610	67	6
5120-00-678-5285	79	12		69	21
5120-00-678-5288	81	9	5935-00-686-9962	69	12
5310-00-678-5370	38	3	5935-00-686-9963	67	46
5330-00-678-5386	21	12		71	18
5330-00-678-5388	13	5	5930-00-688-9882	61	9
5307-00-678-6876	29	23	4730-00-689-1236	41	9
5307-00-678-6877	29	23	3460-00-689-3368	79	2
5307-00-678-6880	29	22	5365-00-690-7933	67	52
5307-00-678-6881	29	22		71	16
5307-00-678-6882	12	31	5935-00-691-5591	70	17
	28	19		70	35
5307-00-678-6883	12	31		70	63

STOCK NUMBER	FIG.	ITEM	STOCK NUMBER	FIG.	ITEM
5935-00-691-5591	71	33		4	11
5975-00-697-7769	67	32	5307-00-734-8783	3	13
	69	13		4	11
4730-00-698-4042	57	6	5307-00-734-8797	3	16
6145-00-699-8963	BULK	34	5307-00-734-8798	3	16
6145-00-705-6674	BULK	33	5307-00-734-8803	4	3
5940-00-705-6702	71	9		28	6
5940-00-705-6709	72	47	5307-00-734-8804	4	3
5940-00-705-6710	67	22		28	6
	68	17	5307-00-734-8812	12	11
	75	9	5307-00-734-8813	12	11
5940-00-705-6711	68	20	5340-00-735-1617	64	11
5307-00-706-5766	28	4	5940-00-735-5520	71	23
5307-00-706-5767	28	4	5340-00-738-4968	84	5
4720-00-706-9144	44	2	5340-00-738-5174	23	5
5110-00-708-3696	80	17		41	8
5110-00-708-3697	80	16	5365-00-740-3580	22	7
5110-00-708-3698	80	15	5307-00-741-0163	29	25
5110-00-708-3699	80	14	5307-00-741-0395	17	6
5305-00-709-8283	2	23		28	3
5305-00-709-8515	11	30		31	2
5305-00-709-8517	10	21	5306-00-741-4584	47	18
	11	19		51	7
5305-00-709-8523	1	14		52	4
5305-00-709-8539	10	26		53	15
	11	46	5330-00-741-5354	39	19
	45	7	5307-00-741-5384	12	18
5120-00-710-7437	80	4		27	27
2920-00-711-5829	47	2	5935-00-745-7885	69	17
5305-00-719-5219	1	5	5935-00-745-7886	69	18
	1	29	5975-00-752-2746	74	10
5305-00-719-5279	22	21	9905-00-752-4649	70	12
4730-00-720-4620	39	31		70	40
5310-00-720-7627	2	25		70	53
5310-00-721-5940	82	14		70	61
5120-00-723-6833	80	23		71	11
4720-00-723-7397	57	11		72	15
5340-00-724-7015	44	4		72	36
5305-00-724-7223	82	16		75	8
5305-00-725-0154	36	4	5975-00-752-7644	67	41
4730-00-725-3664	47	16	5120-00-752-9755	81	20
	48	44	5320-00-753-3830	77	7
5340-00-725-5280	21	36	5315-00-753-9735	1	6
	65	15	2805-00-753-9838	9	10
5307-00-727-4938	4	10	5340-00-753-9839	9	6
5935-00-729-8217	71	8	5325-00-754-1083	10	29
	72	17		11	15
5310-00-732-0558	62	24		49	2
5365-00-733-8667	10	8		49	12
	11	44	5935-00-754-8711	67	11
	31	6		68	8
6685-00-734-6573	22	8	5935-00-754-9080	71	2
5307-00-734-8596	17	6		72	20
	28	3	2805-00-760-5837	51	28
	31	2	2805-00-760-5838	51	13
5307-00-734-8668	12	15	5310-00-761-6882	63	17
	28	8		64	8
	31	8	3010-00-762-4587	KITS	
	34	22	5310-00-763-8901	82	4
5307-00-734-8669	12	15	5310-00-763-8920	82	18
	31	8	4720-00-766-0903	22	16
	34	22	4720-00-766-0967	39	34
5307-00-734-8776	34	4	3040-00-767-3200	29	11
5307-00-734-8777	34	4	2920-00-770-1641	48	25
5307-00-734-8782	3	13	5999-00-771-6527	67	50

STOCK NUMBER	FIG.	ITEM	STOCK NUMBER	FIG.	ITEM
5999-00-771-6527	71	19	4710-00-795-7953	81	13
5935-00-771-6793	67	16	4910-00-795-7954	79	11
	68	10	4910-00-795-7955	79	1
4720-00-771-6968	58	15	5120-00-795-7956	81	1
2990-00-771-6969	58	7	4910-00-795-7958	81	12
5930-00-771-8119	61	21	4910-00-795-7961	81	25
5365-00-772-2322	67	28	5120-00-797-2405	80	3
5365-00-772-2343	67	4	5120-00-797-2407	80	5
	69	22	4730-00-800-9872	38	37
5935-00-772-2353	67	23	4330-00-801-1152	KITS	
	68	19	5325-00-801-2500	6	19
5935-00-772-3307	67	30	5307-00-801-4819	26	25
	69	11	5307-00-801-5295	26	25
5331-00-772-3892	1	32	5330-00-803-0259	58	17
5307-00-774-4555	5	14	5325-00-803-7305	38	28
5310-00-774-4570	15	21		49	1
5307-00-774-4572	12	10		49	44
5307-00-774-4573	12	10	4730-00-803-7728	38	23
5307-00-774-4605	31	20	5325-00-803-9976	12	22
2805-00-774-4610	9	5	5325-00-804-2786	33	2
5315-00-774-4699	19	16	5325-00-804-3891	29	9
	19	46	4730-00-804-7944	38	33
5306-00-774-4720	54	12	4720-00-804-9249	BULK	28
5310-00-774-4766	34	14	4730-00-805-0676	48	31
5307-00-774-4795	31	20	5331-00-805-2966	43	3
2805-00-774-4798	9	14	4710-00-805-4149	48	34
5307-00-774-4803	5	14	5310-00-807-1465	44	6
5340-00-774-4858	51	16	5310-00-807-1469	32	18
5310-00-776-7317	9	16	4730-00-807-3003	44	5
	9	24	2940-00-808-2421	46	21
5310-00-776-7318	24	9	2910-00-808-2470	45	6
	25	1		46	14
	42	3	5340-00-809-1490	47	11
	56	6		48	12
	56	13		64	2
	59	7	5310-00-809-3079	41	10
	62	27	5310-00-809-4058	34	9
	63	32		46	19
	66	7	5310-00-809-4061	42	44
2805-00-776-7321	9	19	5310-00-809-8533	39	3
	9	25	5310-00-809-8540	38	13
5355-00-776-7331	1	9	5970-00-812-2969	BULK	4
5315-00-776-7363	6	2	5970-00-813-2967	BULK	20
	7	9	5935-00-813-4716	69	16
5310-00-776-7728	55	6	4730-00-813-9611	41	36
5307-00-776-7804	5	11	5970-00-814-2878	BULK	7
	12	6	6685-00-814-5271	61	11
	26	12	5330-00-814-6675	5	7
	26	26		29	28
5307-00-776-7805	5	11	5970-00-815-1300	BULK	19
	12	6	5306-00-817-6131	6	17
	26	12		7	5
	26	26	3020-00-817-9538	6	20
5970-00-787-2321	BULK	14	5970-00-819-9569	BULK	15
5120-00-789-4881	81	23	5310-00-820-6653	82	17
4820-00-790-2301	38	17	4710-00-821-0659	39	14
4720-00-792-5393	38	22	5305-00-821-3869	46	3
5120-00-793-7895	81	14	5365-00-822-2136	27	30
5210-00-793-7897	81	19	5315-00-823-8682	3	14
5210-00-793-7898	81	18	4730-00-825-7304	38	15
5210-00-793-7899	81	17	5340-00-828-2830	12	21
4820-00-795-1795	39	26	5315-00-828-4485	49	8
5342-00-795-1800	6	16		49	16
4910-00-795-7951	81	22		49	31
5365-00-795-7952	81	27	5325-00-828-7570	30	14

STOCK NUMBER	FIG.	ITEM	STOCK NUMBER	FIG.	ITEM
2920-00-830-6660	56	17	5310-00-877-5797	47	40
5340-00-833-3049	65	11		48	7
5331-00-833-7491	43	15		54	14
4710-00-833-8164	20	3		84	9
5340-00-833-8476	64	9	5365-00-878-9932	35	6
5935-00-833-8561	67	13	2910-00-878-9933	35	7
	68	5	5995-00-879-1666	60	4
	69	6	5310-00-880-5976	50	2
	71	30	5340-00-881-5303	38	9
	73	10	5310-00-891-1752	49	9
5970-00-833-8562	67	14		49	52
	68	6		49	70
	69	7		49	80
	69	19	5305-00-891-7871	49	10
	70	24	9905-00-893-3570	71	27
	70	50		72	16
	71	29		72	37
	73	11		74	11
5310-00-833-8567	69	3		76	4
4730-00-834-5374	38	38	4730-00-895-9726	34	16
5310-00-834-7606	82	15	4720-00-896-6166	10	18
5120-00-837-5091	81	26		11	39
4730-00-837-7073	12	4		21	9
	45	50		30	21
5307-00-837-7791	42	21		50	42
5306-00-837-9469	33	13	2590-00-897-2849	15	2
5315-00-839-2325	33	33		15	9
	55	23	5330-00-899-1504	1	33
5315-00-839-5820	28	16	4730-00-902-3188	39	8
	29	17	5330-00-902-3189	32	22
	30	24	5310-00-902-6676	38	18
	31	16		60	8
	33	4	5970-00-905-2068	BULK	16
	34	12	5305-00-905-2712	39	13
5310-00-840-6151	34	10	5310-00-905-4600	24	11
9905-00-841-4445	71	12		25	18
5307-00-841-6477	4	10		26	4
5310-00-842-1488	6	6	5306-00-906-9702	10	37
	28	17		11	36
5325-00-842-2613	49	20	4730-00-908-3193	10	17
5315-00-842-3044	6	5		11	38
3120-00-846-2012	49	27		21	6
5310-00-849-6883	8	15		30	20
	34	13	4730-00-908-3198	20	4
3040-00-851-4909	11	24		50	41
3020-00-851-9176	27	7	4730-00-908-6292	58	1
4730-00-854-5837	47	41	4730-00-908-6293	58	8
4910-00-856-4137	78	2	4730-00-909-8627	15	17
8145-00-856-8147	82	1		50	5
5120-00-861-1170	80	7	5305-00-912-5113	16	18
3040-00-861-1447	27	9		52	34
3040-00-861-1448	27	3	5331-00-913-4697	27	4
3020-00-861-3829	7	1	5970-00-914-3118	BULK	13
5307-00-866-6736	12	9	5305-00-914-6131	56	7
	12	20		66	9
	17	4	5340-00-922-6300	38	26
5307-00-866-6737	12	9		47	39
	12	20		48	6
	17	4		60	7
4710-00-869-3595	20	16	5999-00-926-3144	70	19
4910-00-870-6283	79	10		70	33
4730-00-873-0110	21	24		70	65
4720-00-875-5437	21	22		71	28
5120-00-875-9556	81	10	4730-00-930-7776	47	15
5310-00-877-5796	54	15	3040-00-932-5001	49	29

STOCK NUMBER	FIG.	ITEM	STOCK NUMBER	FIG.	ITEM
4730-00-933-3138	84	1		66	10
5315-00-934-0285	49	50	4910-00-986-9873	78	4
5310-00-934-9734	60	3	5340-00-988-1162	62	36
5310-00-934-9757	62	9	5220-00-988-8774	79	5
	65	6	5325-00-989-7682	16	15
5310-00-934-9758	62	11	5340-00-989-9222	38	19
	63	7		84	8
	65	9	5331-00-990-4143	10	28
5310-00-934-9761	50	29		11	16
5970-00-935-0082	BULK	8	5970-00-990-7048	71	10
5340-00-937-1450	39	25	5325-00-990-7158	3	23
3130-00-937-1467	27	11	5340-00-990-7610	60	6
3040-00-937-4846	31	32	9525-00-990-7799	BULK	36
5310-00-941-3598	44	7	5970-00-990-9912	BULK	5
5305-00-942-2170	18	12	5305-00-993-1206	63	10
5310-00-945-0528	49	23	5305-00-993-1851	38	21
4730-00-947-6101	57	15		47	37
4730-00-948-9682	43	9		48	9
5310-00-950-0039	1	23		60	5
	14	14		84	6
	14	14	4730-00-993-5002	50	32
	16	20	6620-00-993-5546	61	18
5330-00-954-2740	5	23	4730-00-993-7764	38	7
5305-00-958-4346	60	1	4730-00-995-1559	21	5
5310-00-959-1488	1	10	4730-00-995-1590	39	21
	1	20	2930-00-997-1537	55	11
	10	12	4730-01-003-6044	50	38
	11	4	2815-01-005-1463	29	3
	14	15	2930-01-005-1549	52	44
	15	19		52	44
	27	19	4730-01-005-2014	36	7
	29	1	2815-01-005-2993	28	1
	31	38	5180-01-005-2995	81	8
	34	25	5120-01-005-2996	81	7
	39	23	5120-01-005-3000	81	3
	42	2	5120-01-005-3001	81	2
	42	45	5220-01-005-3002	79	7
	42	48	5220-01-005-3003	79	6
	45	17	5331-01-005-3213	15	37
	52	39	4710-01-005-5237	20	15
	55	17	5935-01-005-6455	67	25
5340-00-959-8422	62	34	5180-01-006-9708	KITS	
	66	11	4730-01-007-5232	21	31
5340-00-964-5267	21	33		23	7
	45	15		43	2
	48	47	2930-01-007-5276	51	35
	66	5	2930-01-007-5277	51	39
6680-00-973-1263	11	26	9905-01-007-7165	77	3
5310-00-982-4908	18	8	5342-01-007-7209	54	1
5310-00-982-4912	2	14	6150-01-008-1440	74	15
	37	21	6150-01-008-1441	59	12
	41	28		59	12
	45	29	4710-01-009-4306	38	11
	49	77	3040-01-010-3186	31	18
	50	20	5340-01-010-6169	37	38
5310-00-982-6539	47	4	5340-01-010-6170	37	16
	48	19	5340-01-010-6171	37	13
5310-00-982-6809	59	9	5340-01-010-6172	37	14
5305-00-984-4988	44	3	5340-01-010-6173	37	15
5305-00-984-6193	62	12	5340-01-010-6174	37	20
5340-00-984-8540	47	34	4730-01-010-6205	21	23
	48	20	5340-01-010-8946	52	24
	63	15	5340-01-010-9086	42	34
	64	5	5342-01-010-9089	54	6
5975-00-985-6630	65	10	5340-01-010-9347	24	19

STOCK NUMBER	FIG.	ITEM
5340-01-010-9347	25	15
5340-01-010-9348	24	18
	25	13
5360-01-011-0732	49	40
2990-01-011-2319	42	23
5342-01-011-2322	54	1
2990-01-011-2665	7	7
4730-01-011-3961	38	6
5342-01-011-9019	54	5
5340-01-011-9020	34	8
5340-01-011-9021	34	17
5342-01-011-9022	42	26
5365-01-011-9026	1	15
4710-01-011-9104	38	14
2910-01-011-9105	48	29
4820-01-011-9665	57	7
2930-01-012-2879	51	38
4710-01-012-4645	37	6
4710-01-012-4646	37	5
4710-01-012-4647	37	2
4710-01-012-4648	37	1
4710-01-012-4649	37	9
4710-01-012-4650	37	4
4710-01-012-4651	37	3
4710-01-012-4652	37	8
4710-01-012-4653	37	10
4710-01-012-4654	37	12
4710-01-012-4655	37	7
4710-01-012-6712	48	10
5342-01-012-9150	54	2
5305-01-013-1424	49	53
3040-01-013-1783	31	1
5307-01-013-3088	19	40
5307-01-013-3089	19	40
3120-01-013-3629	KITS	
5306-01-013-7020	37	37
5935-01-013-7520	67	9
5307-01-013-7889	3	6
	3	6
5307-01-013-7890	3	6
	3	6
9905-01-013-8723	67	15
3110-01-013-9708	49	65
5310-01-014-1087	19	6
5310-01-014-1090	19	27
5307-01-014-1254	3	7
5307-01-014-1255	3	7
5340-01-014-7060	17	7
5307-01-014-7885	19	39
4710-01-014-8156	37	11
9320-01-014-8683	BULK	26
5306-01-015-5673	38	10
5342-01-015-9788	37	27
5342-01-015-9789	37	25
	41	31
5945-01-016-0875	49	37
4730-01-016-5907	57	2
5935-01-016-8330	74	2
2910-01-017-1482	45	28
3040-01-017-1483	9	22
5342-01-017-4508	37	19
2990-01-017-5186	24	14
2990-01-017-5187	25	8
5340-01-017-6795	52	1
4140-01-017-6850	51	8
5340-01-017-6946	52	2
5340-01-017-6947	37	24
	41	30
3120-01-018-0192	KITS	
3040-01-018-3701	49	24
3040-01-018-3702	49	82
5120-01-018-8690	80	2
5307-01-019-8946	19	37
5307-01-019-8947	19	37
5930-01-021-1559	61	13
5365-01-021-3088	37	22
3120-01-022-2044	49	72
4730-01-022-6012	42	13
4730-01-022-6066	12	3
	17	9
2910-01-022-6967	45	12
5342-01-023-7838	45	30
2930-01-024-6706	22	12
5307-01-024-7109	3	4
2815-01-024-9266	54	2
2520-01-024-9267	51	30
2815-01-024-9293	7	6
4730-01-026-0443	39	28
3040-01-026-0702	49	78
3040-01-026-0704	9	21
4730-01-026-1848	47	13
5340-01-026-2008	37	26
5340-01-026-4024	37	18
4720-01-026-4828	39	27
5330-01-026-9498	KITS	
5340-01-026-9982	51	6
3040-01-027-0761	49	49
5307-01-027-4732	1	17
6145-01-028-0985	BULK	30
4720-01-030-1057	47	21
5340-01-030-4401	38	31
4730-01-030-4950	12	13
5340-01-030-6928	63	28
4720-01-030-8526	57	1
5340-01-030-8726	62	18
4720-01-030-8796	38	32
5340-01-030-8870	52	5
5307-01-031-0407	34	3
5307-01-031-0408	34	3
4720-01-031-0519	38	16
	45	23
5325-01-031-4286	3	17
5330-01-031-6954	49	38
4730-01-032-1393	57	13
5340-01-032-7369	52	40
5935-01-033-7945	67	17
	68	11
5120-01-034-1698	80	20
5940-01-035-4212	69	10
5935-01-035-6792	74	4
4720-01-035-6877	38	34
4730-01-035-7544	41	16
4730-01-036-5064	41	2
	41	34
4720-01-036-7474	45	49
5330-01-037-0800	32	20
2910-01-037-4741	45	27
	46	1
5340-01-038-8296	52	41
5120-01-039-2809	81	21

STOCK NUMBER	FIG.	ITEM	STOCK NUMBER	FIG.	ITEM
5340-01-041-2420	37	34	5325-01-097-0347	53	18
2910-01-041-3370	47	6	5935-01-097-0399	70	30
	48	17		72	9
2910-01-041-3464	35	2		72	39
5120-01-043-5205	80	19		73	3
5340-01-044-5315	51	1	4720-01-097-4732	57	3
5365-01-044-8400	37	33	4720-01-098-0829	57	14
4730-01-045-1120	47	25	5210-01-099-1477	79	13
	48	35	4730-01-101-4110	22	15
5340-01-046-6814	42	41	6145-01-102-4660	BULK	31
5340-01-046-6826	49	41	5331-01-102-4685	46	20
5306-01-046-7990	56	2	4730-01-104-2268	61	16
5340-01-046-8943	15	20	4730-01-106-4008	38	2
2590-01-047-0804	67	47	5935-01-106-5189	71	4
	71	20		72	23
4730-01-047-2605	48	3	5331-01-107-3121	40	4
5360-01-047-9364	49	69	5331-01-107-4956	40	3
5340-01-047-9403	37	36	5935-01-109-2257	67	48
5365-01-047-9404	1	25		71	21
4710-01-048-3208	20	19	4730-01-109-7971	41	33
2920-01-048-6052	56	4	4710-01-109-8031	41	13
5340-01-048-8600	42	27	4710-01-109-8033	41	26
5365-01-048-8643	13	1	5307-01-113-4110	12	18
4910-01-048-8706	78	3		27	27
4710-01-049-8930	26	19	5365-01-114-7409	32	4
6620-01-050-2086	22	13	5331-01-117-8833	32	16
5360-01-052-0941	13	3	5935-01-118-5713	73	2
5340-01-052-5072	15	26	6680-01-119-0378	15	33
4720-01-053-2018	45	25	5120-01-119-4172	80	18
4720-01-053-2019	45	14	4730-01-127-3942	43	8
5330-01-053-2920	14	11	4730-01-132-1422	2	2
2815-01-053-3789	33	6	5315-01-135-0181	49	42
5340-01-053-4866	46	2	2990-01-136-0965	34	1
	46	16	5340-01-136-4673	41	3
3040-01-054-9730	33	11	4820-01-136-4681	41	6
4730-01-055-4021	48	46	4710-01-139-1863	41	15
5940-01-059-5266	69	14	2920-01-139-3722	59	1
2920-01-065-2016	63	11	4710-01-140-6558	41	27
6150-01-065-6631	67	1	5307-01-144-8861	26	27
2920-01-068-3385	68	1	5340-01-145-4316	56	10
9905-01-069-7222	67	44	5330-01-145-8290	50	10
4820-01-070-5945	KITS		5340-01-145-8301	50	37
5945-01-070-5962	41	19	5340-01-145-8302	50	34
2940-01-070-5969	14	2	5340-01-145-8303	50	18
4820-01-073-0080	14	1	5340-01-145-8307	15	40
2910-01-073-0124	36	1	4710-01-145-8311	50	31
5325-01-073-2809	2	18	2590-01-145-8312	15	8
	3	15	2990-01-146-1877	50	4
	4	9	4720-01-146-1887	50	12
	12	5	4720-01-146-1888	50	13
	19	30	5640-01-146-1889	50	30
	19	50	5640-01-146-1890	50	24
	45	11	5640-01-146-1891	50	27
3020-01-073-4085	53	7	5340-01-146-1895	50	19
5340-01-077-1501	63	23	5640-01-146-1898	50	3
5340-01-081-1686	62	31	4710-01-146-1900	50	39
	63	24	4710-01-146-1901	50	7
5220-01-084-1230	81	28	4710-01-146-1903	41	15
5935-01-084-6024	67	37	4710-01-146-1904	41	27
5970-01-085-0673	BULK	25	4710-01-146-1909	50	15
2990-01-085-3831	24	16	4710-01-146-1910	50	14
2990-01-085-3832	25	14	2815-01-146-9005	26	24
5935-01-088-4466	67	38	5935-01-147-0148	68	4
3010-01-091-3200	KITS		5342-01-147-3136	59	5
3110-01-094-9268	33	31	5307-01-147-3350	19	36

STOCK NUMBER	FIG.	ITEM	STOCK NUMBER	FIG.	ITEM
5930-01-147-7912	43	4	5360-01-274-3562	49	14
5307-01-149-5845	26	26	5340-01-275-3402	44	8
5970-01-149-7442	BULK	24	5340-01-275-5033	15	12
4710-01-150-4822	50	43	5340-01-282-8165	49	39
6150-01-150-9771	72	11	4730-01-284-7065	39	30
5310-01-151-2732	15	22	5340-01-287-3981	62	7
	24	3	5340-01-290-1297	62	7
	25	6	3020-01-290-1298	7	3
	50	25	5995-01-290-1299	68	1
4730-01-152-5621	47	42	5995-01-290-1300	67	1
	48	14	9905-01-292-9065	77	9
2835-01-152-7118	53	1	4730-01-293-2920	57	17
2590-01-152-8806	53	13	4710-01-296-0469	19	49
4720-01-155-5061	21	30	2815-01-298-1128	6	15
2990-01-156-6225	50	11	5330-01-298-4850	14	7
5342-01-157-8846	23	3	5310-01-303-5647	37	29
9905-01-160-2693	77	3	3110-01-315-9564	29	7
5331-01-160-4343	30	15	2815-01-318-5418	KITS	
5330-01-160-4348	26	23	2815-01-318-5419	KITS	
2520-01-160-8074	32	8	2815-01-318-5420	KITS	
4330-01-161-5339	46	9	2815-01-318-5421	KITS	
2520-01-162-7035	22	11	2815-01-318-7913	KITS	
4720-01-163-1093	23	11	5330-01-324-7207	6	11
4720-01-163-3219	23	6	4710-01-330-8073	41	1
4820-01-163-7156	23	12	5340-01-332-9372	42	14
5340-01-165-0580	50	35	5330-01-347-8164	26	1
4720-01-167-0742	23	4	5330-01-352-3361	13	18
2950-01-167-1699	42	11	5935-01-367-9369	68	3
4730-01-167-1997	44	1	5330-01-374-9264	9	1
9905-01-170-9979	77	3	1650-01-378-7277	45	35
4730-01-171-1935	21	15	5330-01-386-8530	24	1
5935-01-172-8574	73	4		25	10
4720-01-173-4145	43	10	5935-01-388-5662	72	8
4720-01-173-4613	43	11	5310-01-391-7138	2	24
4720-01-173-4614	43	13		10	24
4720-01-173-4615	43	1		27	21
9905-01-174-7499	77	8		45	8
4730-01-179-1214	39	2	5330-01-393-7137	10	15
5935-01-182-6802	75	3		11	41
3040-01-184-4813	34	2	5330-01-393-9087	13	14
5935-01-188-6979	75	13	5330-01-393-9091	20	7
5330-01-196-7948	34	6	5305-01-407-9487	20	9
5120-01-204-4469	80	21		21	10
5330-01-207-6449	50	33		47	30
4730-01-228-1045	38	5		48	27
5330-01-229-3452	6	12		58	20
2815-01-233-9709	6	1	4720-01-415-0979	57	9
6150-01-241-9352	76	1	5330-01-417-1912	56	3
5342-01-241-9446	65	4	5310-01-423-7133	49	21
6150-01-245-7645	70	55	5310-01-429-5082	21	38
5995-01-245-7651	69	1	5340-01-433-0518	37	31
2920-01-245-7656	71	1	5340-01-433-0523	37	35
5935-01-246-9207	70	29	5340-01-433-1141	37	30
	72	10	5306-01-433-4086	24	5
4710-01-248-9634	2	4		25	7
	31	9	5330-01-433-5274	35	11
5340-01-249-7910	43	5	5331-01-433-5288	36	14
5995-01-255-0890	70	21	4730-01-434-5429	57	10
5935-01-259-4846	68	22	2990-01-437-3464	51	42
5995-01-262-9527	70	42	2815-01-437-4746	51	44
4320-01-268-2464	50	26	3940-01-440-0283	78	1
5945-01-268-3577	49	34	5340-01-440-1429	25	20
4720-01-268-7902	38	39	2910-01-445-8097	45	32
3040-01-270-5933	49	51	4720-01-465-6575	42	18
3040-01-270-5934	49	43	5340-01-482-5403	35	19

STOCK NUMBER	FIG.	ITEM
5325-01-492-8991	47	22
5395-01-495-6576	75	12
	76	2
2930-01-498-3157	51	43
5305-01-502-7258	37	28
6150-01-509-3761	72	32
6150-01-509-3762	70	8
2520-01-509-6284	53	19
2520-01-509-6286	53	22
2520-01-509-6287	53	22
2910-01-509-6677	KITS	
2910-01-509-7176	35	1
5340-01-510-0252	51	24
5970-01-510-2504	BULK	9
5970-01-510-2508	BULK	17
4720-01-510-3322	21	2
2950-01-510-3622	42	11
5970-01-510-3657	BULK	12
5970-01-510-4237	BULK	21
5306-01-510-4254	7	11
5306-01-510-4289	5	5
3020-01-510-4482	19	7
5305-01-510-4946	82	13
3020-01-510-5419	19	57
4710-01-510-6120	20	6
5305-01-510-6207	45	2
5305-01-510-6988	31	13
5305-01-510-8434	51	23
5306-01-510-8451	36	22
5342-01-511-0621	52	42
5340-01-511-1476	13	6
5310-01-511-1664	30	6
	31	36
5315-01-511-3707	32	6
5970-01-511-4359	47	23
	48	5
5342-01-511-4522	42	4
5342-01-511-4526	42	1
5342-01-511-4534	42	7
4710-01-511-4540	41	35
4910-01-511-5452	53	9
4910-01-511-5453	53	4
5330-01-511-5567	49	54
4710-01-511-5612	21	20
4710-01-511-8944	20	18
5340-01-512-1782	51	15
5306-01-512-6695	42	40
4720-01-512-8124	21	17
5342-01-512-8135	42	4
5342-01-512-8141	52	23
5342-01-512-8535	52	22
5342-01-512-8637	42	1
5310-01-512-9322	77	2
4820-01-512-9998	47	14
4820-01-513-0000	48	45
5342-01-513-0837	42	4
	42	10
5307-01-513-1290	10	35
	11	10
	12	2
	28	21
5970-01-513-1424	BULK	11
4730-01-513-2526	42	17
5340-01-513-3844	21	26
5340-01-513-3876	41	39
5340-01-513-3896	41	39
5307-01-513-4204	17	4
5307-01-513-4344	29	25
5342-01-513-4776	42	10
5342-01-513-5734	42	1
	42	7
2815-01-513-6112	21	14
5342-01-513-7484	42	7
3040-01-519-6392	12	1
3040-01-519-7683	12	1
5307-01-520-8117	3	20
5307-01-521-0059	3	20

CAGEC	PART NUMBER	STOCK NUMBER	FIG.	ITEM
58536	A-A-52506-F-48	4730-00-908-6292	58	1
58536	AA55488-1	5315-00-223-6113	49	22
01843	ADB135S-126-7	2910-00-064-6262	35	13
00624	AE3660060E0270	4720-01-163-3219	23	6
00624	AE3660060E0300	4720-01-163-1093	23	11
00624	AE3660120E0310	4720-01-167-0742	23	4
88044	AN104010	5306-00-906-9702	10	37
			11	36
88044	AN122718	5315-00-241-2916	28	11
80205	AN320-4	5310-00-176-8108	33	34
88044	AN5H12A	5306-00-182-2029	32	12
88044	AN6-5A	5306-00-180-0238	55	2
88044	AN8C56A	5306-00-069-3019	50	22
88044	AN814-4D	5365-00-287-0094	22	10
			22	10
			23	8
88044	AN844-20D	4730-00-277-1987	21	21
88044	AN901-20C	5330-00-196-6714	16	8
10001	AN911-2	4730-00-186-7798	41	23
88044	AN911-3J	4730-00-720-4620	39	31
88044	AN924-10	5310-00-145-1650	21	39
88044	AN924-8	5310-00-208-5775	39	5
88044	AN931B9-13	5325-00-276-6096	42	47
			52	37
88044	AN960-416	5310-00-141-1795	11	27
			33	35
			39	11
			49	62
88044	AN960-816	5310-00-167-0823	42	37
81343	AS29513-116	5331-00-248-3850	46	10
81343	AS29513-125	5331-00-265-1089	45	34
			45	41
81343	AS3582-230	5331-00-990-4143	10	28
			11	16
81343	AS4857J02	4730-00-541-2745	61	17
81343	AS4860J02	4730-00-698-4042	57	6
81343	AS5178-08	5310-00-208-5775	38	35
			84	3
34623	A1265	4730-00-430-3165	48	30
58536	A52472-1	2910-01-445-8097	45	32
81346	A733S25CS	4730-01-104-2268	61	16
80204	B1821BH025C050N	5305-00-071-2506	51	18
			54	4
80204	B1821BH025C056N	5305-00-225-3844	63	29

CAGEC	PART NUMBER	STOCK NUMBER	FIG.	ITEM
80204	B1821BH025C100N	5305-00-225-3843	46	17
			49	76
80204	B1821BH025F050N	5305-00-267-8952	48	41
			63	8
80204	B1821BH025F056N	5305-00-068-0512	43	7
			47	33
			48	21
80204	B1821BH025F075N	5306-00-068-0513	11	28
			41	18
			50	8
			61	6
80204	B1821BH025F088N	5306-00-068-0514	41	4
80204	B1821BH025F100N	5305-00-068-0515	58	19
80204	B1821BH025F225D	5305-00-905-2712	39	13
80204	B1821BH025F250N	5305-00-267-8960	54	17
80204	B1821BH031F075H		23	2
80204	B1821BH031F075N	5306-00-050-1238	15	16
			18	10
			30	7
			31	35
			50	17
			58	9
			61	4
			62	14
			63	34
			65	13
			66	4
80204	B1821BH031F088N	5305-01-407-9487	20	9
			21	10
			47	30
			48	27
			58	20
80204	B1821BH031F100N	5305-00-051-4076	11	6
			49	19
80204	B1821BH031F113N	5306-00-051-4077	63	5
80204	B1821BH031F175N	5306-00-051-4081	37	17
			41	32
80204	B1821BH031F325N	5306-00-051-4087	5	8
80204	B1821BH031075N		63	21
80204	B1821BH038C125N	5305-00-068-0511	62	21
80204	B1821BH038C175N	5305-00-821-3869	46	3
80204	B1821BH038F075N	5305-00-269-3234	16	2
			51	5
80204	B1821BH038F088N	5305-00-269-3235	15	27

CAGEC	PART NUMBER	STOCK NUMBER	FIG.	ITEM
80204	B1821BH038F088N	5305-00-269-3235	58	6
80204	B1821BH038F100N	5305-00-269-3236	15	23
			18	4
80204	B1821BH038F113N	5305-00-269-3237	29	18
			51	33
80204	B1821BH038F125N	5305-00-269-3238	15	25
			24	8
			25	2
			31	15
			42	6
80204	B1821BH038F138N	5305-00-269-3239	14	3
			56	8
80204	B1821BH038F150N	5305-00-269-3240	24	20
			25	16
			55	5
80204	B1821BH038F175D	5305-00-914-6131	56	7
			66	9
80204	B1821BH038F175G		56	15
80204	B1821BH038F175N	5305-00-269-3241	59	8
			62	28
			63	31
80204	B1821BH038F200N	5305-00-269-3242	19	43
			56	14
80204	B1821BH038F225N	5305-00-269-3243	42	25
80204	B1821BH038F275N	5305-00-269-3245	55	4
80204	B1821BH038138N		42	43
80204	B1821BH044F125N	5305-00-709-8523	1	14
80204	B1821BH044F138N	5305-00-709-8515	11	30
80204	B1821BH044F500N		27	22
80204	B1821BH050F138N	5305-00-725-0154	36	4
80204	B1821BH063C225N	5305-00-724-7223	82	16
81349	B7444-3-1-R500B	5970-00-583-1814	76	7
81349	B7444-3-1-15B	5970-00-990-7048	71	10
75394	CC14894		36	16
75394	CC14983		36	18
75394	CC14985		36	15
75394	CC40552MK12		36	17
90005	CF8EID	4330-01-161-5339	46	9
02978	C0524411-1	5325-00-679-8116	10	33
			11	12
65493	C13A	4820-00-620-8123	82	9
65456	C3062	3010-00-678-4725	36	11
86988	C3062-2		36	12
79470	C3069X2	4730-01-055-4021	48	46

CAGEC	PART NUMBER	STOCK NUMBER	FIG.	ITEM
79470	C3109X8X6	4730-00-044-4035	12	17
79470	C3209X8X6	4730-00-807-3003	44	5
13932	D9D5306	3110-00-156-5443	27	31
OB231	ED89D	2920-00-711-5829	47	2
81361	E150-1-12-5-1A	4730-01-167-1997	44	1
02978	E2DRS131-001		51	14
81348	FFB171/03J10A2E	3110-00-529-9480	33	9
01276	FF9311-36	4730-00-909-8627	15	17
			50	5
55719	FRH-240S	5120-01-204-4469	80	21
75370	F1682-80	2815-01-318-5418	KITS	
92003	F60A0051	4820-00-790-2301	38	17
01843	GU7837	2910-00-878-9933	35	7
31435	G22-6F	2920-00-830-6660	56	17
01843	HH78371		35	4
73134	HMJL5CTPB	3120-01-022-2044	49	72
98897	LS4634-10	5331-00-108-5691	57	12
96906	MS122165	5325-00-990-7158	3	23
96906	MS124657	5325-00-045-2676	55	13
			55	20
96906	MS124658	5325-00-291-3493	55	12
			55	19
96906	MS124697	5325-00-291-3495	3	10
			28	10
			31	11
96906	MS124698	5325-00-291-3492	3	19
96906	MS124699	5325-00-634-7860	4	13
96906	MS124700	5325-00-291-3488	5	15
96906	MS124737	5325-00-514-2321	10	9
			11	43
96906	MS124738	5325-01-031-4286	3	17
96906	MS14315-1X	4730-01-152-5621	47	42
			48	14
96906	MS15006-4	4730-00-172-0058	36	6
80205	MS15795-703	5310-00-656-0111	77	4
80205	MS15795-806	5310-00-880-5976	50	2
80205	MS15795-858	5310-01-303-5647	37	29
96906	MS16555-25	5315-00-823-8682	3	14
96906	MS16555-653	5315-00-682-1746	49	56
96906	MS16555-655	5315-00-828-4485	49	8
			49	16
			49	31
96906	MS16624-1062	5325-00-803-7305	38	28
			49	1

CAGEC	PART NUMBER	STOCK NUMBER	FIG.	ITEM
96906	MS16624-1062	5325-00-803-7305	49	44
96906	MS16624-131	5325-00-803-9976	12	22
96906	MS16625-1112	5325-00-801-2500	6	19
96906	MS16625-1125	5325-00-804-2786	33	2
96906	MS16625-1137	5325-00-754-1083	10	29
			11	15
96906	MS16625-1137	5365-00-754-1083	49	2
			49	12
96906	MS16625-1281	5365-00-822-2136	27	30
96906	MS16625-1354	5325-00-260-4875	27	5
96906	MS16625-3212	5325-00-202-0194	8	9
96906	MS16626-1112	5325-00-828-7570	30	14
96906	MS16626-1143	5325-00-989-7682	16	15
96906	MS16627-1112	5325-00-558-8482	16	7
96906	MS16632-1031	5325-00-663-1245	32	5
96906	MS16633-1062	5325-00-842-2613	49	20
96906	MS17131-18	3110-00-198-1085	49	46
96906	MS171592	5315-01-135-0181	49	42
96906	MS17795-104	3120-00-846-2012	49	27
96906	MS19068-051	5310-00-185-6426	19	54
96906	MS19070-051	5310-00-159-6495	19	55
96906	MS20002C8	5310-00-149-9116	36	23
96906	MS20365-524A	5310-00-262-6375	30	19
96906	MS20500-720A	5310-00-493-4020	1	18
96906	MS20613-4P5	5320-00-753-3830	77	7
96906	MS20659-107	5940-00-113-9824	67	53
			68	24
96906	MS20659-127	5940-00-113-3147	75	10
96906	MS20659-135	5940-00-115-5001	70	2
			70	36
			72	33
			72	46
96906	MS20659-142	5940-00-114-1315	67	54
			68	23
96906	MS20659-163	5940-00-113-3145	70	15
			70	47
			70	56
			72	30
59730	MS20695-135		72	2
			72	12
96906	MS20822-4-4	4730-00-231-4010	45	54
96906	MS20822-4-4S	4730-00-277-2448	57	8
96906	MS20822-5S	4730-01-010-6205	21	23
96906	MS20823-10J	4730-00-122-0526	21	35

CAGEC	PART NUMBER	STOCK NUMBER	FIG.	ITEM
96906	MS20823-5J	4730-00-895-9726	34	16
96906	MS20913-6S	4730-00-221-2140	82	8
96906	MS20995NC32-12		8	14
			33	30
96906	MS20995NC40-12		2	31
			7	10
			10	36
			11	37
			19	26
			27	1
			31	12
96906	MS20995NC40-16		6	18
96906	MS20995NC40-36		32	13
80205	MS21042-06	5310-00-807-1465	44	6
80205	MS21042-5	5310-00-807-1469	32	18
80205	MS21044N10	5310-00-982-6809	59	9
80205	MS21044N3	5310-00-877-5797	47	40
			48	7
96906	MS21044N3	5310-00-877-5797	54	14
80205	MS21044N3	5310-00-877-5797	84	9
80205	MS21044N4	5310-00-877-5796	54	15
80205	MS21044N5	5310-00-088-0553	13	7
96906	MS21044N5	5310-00-088-0553	15	32
80205	MS21044N5	5310-00-088-0553	19	3
96906	MS21044N5	5310-00-088-0553	21	18
			22	18
80205	MS21044N5	5310-00-088-0553	26	5
			28	22
96906	MS21044N5	5310-00-088-0553	38	8
			39	17
80205	MS21044N5	5310-00-088-0553	42	16
96906	MS21044N5	5310-00-088-0553	47	8
			48	50
80205	MS21044N5	5310-00-088-0553	49	67
96906	MS21044N5	5310-00-088-0553	52	13
			62	29
			63	26
80205	MS21044N5	5310-00-088-0553	66	2
80205	MS21044N6	5310-00-950-0039	1	23
			14	14
			14	14
			16	20
80205	MS21044N7	5310-00-088-0552	1	11
			27	20

CAGEC	PART NUMBER	STOCK NUMBER	FIG.	ITEM
96906	MS21045-C6	5310-00-059-9264	24	17
			25	12
96906	MS21045-4	5310-00-061-7325	41	20
			47	35
			48	22
			61	1
96906	MS21045-5	5310-00-982-4912	2	14
			37	21
			41	28
			45	29
			49	77
			50	20
96906	MS21045-6	5310-00-982-4908	18	8
96906	MS21045-7	5310-00-274-9364	52	35
96906	MS21045-8	5310-00-062-4954	1	12
			42	38
96906	MS21083N3	5310-00-902-6676	38	18
			60	8
96906	MS21083N5	5310-00-660-3381	27	12
96906	MS21209F5-15	5325-01-073-2809	2	18
			3	15
			4	9
			12	5
			19	30
			19	50
			45	11
96906	MS21209F5-20	5325-00-582-7256	5	20
			17	2
96906	MS21209F6-15	5325-00-680-8768	12	28
96906	MS21209F6-20	5325-00-678-3311	3	2
			3	18
			17	3
			31	19
80205	MS21318-27	5305-00-253-5618	77	1
80205	MS21333-101	5340-00-088-6655	45	1
80205	MS21333-102	5340-00-984-8540	47	34
			48	20
			63	15
			64	5
96906	MS21333-104	5340-00-088-1254	63	30
96906	MS21333-108	5340-00-057-3025	41	29
			64	3
			66	3
96906	MS21333-109	5340-00-067-3868	47	12

CAGEC	PART NUMBER	STOCK NUMBER	FIG.	ITEM
96906	MS21333-109	5340-00-067-3868	48	11
			63	2
			65	1
96906	MS21333-110	5340-00-057-3034	45	26
			62	38
			63	1
			65	2
96906	MS21333-111	5340-00-057-3037	41	14
			63	22
96906	MS21333-112	5340-00-057-3043	21	4
			62	37
			63	19
96906	MS21333-113	5340-00-988-1162	62	36
96906	MS21333-118	5340-00-057-3029	63	12
96906	MS21333-119	5340-00-050-9077	41	29
96906	MS21333-120	5340-00-964-5267	21	33
			45	15
			48	47
			66	5
96906	MS21333-122	5340-00-833-8476	64	9
96906	MS21333-127	5340-00-833-3049	65	11
80205	MS21333-129	5340-00-151-9651	21	27
96906	MS21333-45	5340-00-881-5303	38	9
96906	MS21333-52	5340-00-282-7548	50	40
96906	MS21333-62	5340-00-282-7509	39	22
96906	MS21333-66	5340-00-990-7610	60	6
80205	MS21333-67	5340-00-079-7837	47	38
			48	8
96906	MS21333-71	5340-00-057-2904	38	20
			84	7
96906	MS21333-72	5340-00-091-3790	38	27
			39	6
96906	MS21333-74	5340-00-989-9222	38	19
			84	8
96906	MS21333-75	5340-00-050-2740	38	25
96906	MS21333-77	5340-00-922-6300	38	26
			47	39
			48	6
			60	7
96906	MS21333-98	5340-00-809-1490	47	11
			48	12
			64	2
96906	MS24393-8	4730-00-800-9872	38	37
96906	MS24402-8	4730-00-804-7944	38	33

CAGEC	PART NUMBER	STOCK NUMBER	FIG.	ITEM
96906	MS24402J4	4730-00-834-5374	38	38
96906	MS24487-8	4730-00-057-5557	57	4
96906	MS24537-1	6685-00-814-5271	61	11
80205	MS24665-132	5315-00-839-2325	33	33
			55	23
96906	MS24665-134	5315-00-839-5820	28	16
			29	17
			30	24
			31	16
			33	4
80205	MS24665-134	5315-00-839-5820	34	12
80205	MS24665-283	5315-00-842-3044	6	5
80205	MS24665-291	5315-00-019-0777	27	37
80205	MS24665-300	5315-00-234-1863	42	33
80205	MS24665-302	5315-00-234-1864	2	26
80205	MS24665-359	5315-00-013-7214	55	24
80205	MS24665-86	5315-00-239-8019	34	11
96906	MS24668-22	5305-00-993-1206	63	10
96906	MS24668-28		16	12
96906	MS25036-112	5940-00-143-4794	68	21
			69	9
96906	MS25036-133	5940-00-115-5006	70	7
			74	14
			75	19
			76	8
96906	MS27142-3	5935-00-115-2306	70	16
			70	32
96906	MS27144-2	5935-00-115-2307	70	22
			70	48
96906	MS27148-3	5999-00-926-3144	70	19
			70	33
			70	65
			71	28
96906	MS27151-24	5310-00-489-5663	64	10
96906	MS27183-10	5310-00-809-4058	34	9
			46	19
96906	MS27183-12	5310-00-081-4219	22	2
			47	7
			48	49
			52	14
			58	11
96906	MS27183-14	5310-00-080-6004	46	4
			58	4
96906	MS27183-15	5310-00-809-4061	42	44

CAGEC	PART NUMBER	STOCK NUMBER	FIG.	ITEM
96906	MS27183-19	5310-00-809-3079	41	10
96906	MS27183-23	5310-00-809-8533	39	3
96906	MS27183-25	5310-00-809-8540	38	13
96906	MS27488-12-1	5935-01-097-0399	70	30
			72	9
			72	39
			73	3
96906	MS27488-16-1	5935-00-235-8970	68	18
96906	MS27769C6	4730-00-278-2966	2	9
			12	12
96906	MS27769S2	4730-00-541-7749	24	4
			25	4
96906	MS28741-8-0120	4720-00-274-9335	39	9
96906	MS28741-8-0134	4720-00-420-4396	39	20
96906	MS28741-8-0194	4720-00-115-0170	41	7
96906	MS28741-8-0240	4720-00-274-9356	39	33
96906	MS28741-8-0300	4720-00-461-9797	39	1
96906	MS28741-8-0330	4720-00-766-0967	39	34
81343	MS28775-011	5331-00-582-2133	10	27
			11	49
			31	24
96906	MS28775-110	5331-00-585-6663	29	19
81343	MS28775-112	5331-00-599-2934	31	21
96906	MS28775-113	5331-00-582-2855	36	25
81343	MS28775-116	5331-00-579-3156	36	2
96906	MS28775-222	5331-00-297-9990	11	29
96906	MS28775-223	5331-00-913-4697	27	4
81343	MS28775-226	5331-00-576-9732	29	4
81343	MS28775-229	5331-00-579-7918	10	5
			11	48
96906	MS28775-236	5331-00-579-6861	27	10
96906	MS28775-238	5331-00-579-7545	36	13
96906	MS28775-272	5331-01-117-8833	32	16
81343	MS28778-4	5331-00-805-2966	43	3
81343	MS28778-5	5331-00-833-7491	43	15
96906	MS29561-256	5330-00-954-2740	5	23
71468	MS3057-24A	5935-00-280-2192	72	38
96906	MS3106E-10SL-4S	5935-00-553-3093	69	15
96906	MS3106R-10SL-3S	5935-00-813-4716	69	16
96906	MS3106R-10SL-4S	5935-00-051-4146	72	45
96906	MS3106R-105L-4S		68	2
96906	MS3106R10SL-3S	5935-00-534-7553	67	11
96906	MS3108R10SL-3S	5935-00-754-8711	67	11
			68	8

CAGEC	PART NUMBER	STOCK NUMBER	FIG.	ITEM
81343	MS3367-1-9	5975-00-074-2072	43	12
			45	13
			63	18
			64	13
			65	14
			66	1
96906	MS3367-3-0	5975-00-985-6630	65	10
			66	10
96906	MS3420-24	5365-00-141-6945	72	40
96906	MS3450L32-1S		72	41
96906	MS3450W32-1S	5935-01-246-9207	70	29
			72	10
96906	MS3456W10SL-4S	5935-00-509-6194	67	2
			70	9
			70	43
			70	60
			72	27
			73	5
96906	MS3456W12-5S	5935-01-147-0148	68	4
96906	MS3456W16-11S	5935-00-624-7660	75	2
96906	MS3456W22-23P	5935-01-118-5713	73	2
96906	MS3456W22-4S	5935-01-259-4846	68	22
96906	MS35206-228	5305-00-984-4988	44	3
96906	MS35206-245	5305-00-984-6193	62	12
96906	MS35207-215	5305-00-958-4346	60	1
96906	MS35207-267	5305-00-993-1851	38	21
			47	37
			48	9
			60	5
			84	6
96906	MS35265-45	5305-00-543-2752	62	4
96906	MS35265-46	5305-00-622-9476	65	3
96906	MS35265-63	5305-00-614-0274	62	3
			63	3
96906	MS35265-64	5305-00-614-0245	65	7
96906	MS35266-70	5305-00-655-6556	45	43
96906	MS35292-100	5305-01-510-4946	82	13
96906	MS35292-93	5305-00-060-9431	1	26
80205	MS35308-361	5305-00-685-3510	24	13
			25	9
80205	MS35308-365	5305-00-531-1097	24	7
			24	7
			25	3
			25	3

CAGEC	PART NUMBER	STOCK NUMBER	FIG.	ITEM
80205	MS35308-368	5305-00-588-2959	42	8
96906	MS35333-40	5310-00-550-1130	61	5
			63	9
96906	MS35333-41	5310-00-167-0721	62	35
			65	12
			66	6
96906	MS35335-29	5310-00-616-3554	60	2
96906	MS35335-33	5310-00-209-0786	48	42
			51	22
			54	3
96906	MS35335-34	5310-00-514-6674	23	1
			45	47
			61	3
			62	1
			63	4
96906	MS35335-38	5310-00-616-6354	41	11
96906	MS35335-40	5310-00-275-3683	38	36
			39	4
			84	2
96906	MS35335-58	5310-00-209-1366	50	28
80205	MS35338-42	5310-00-045-3299	62	8
			65	5
80205	MS35338-43	5310-00-045-3296	45	44
			62	10
			63	6
			65	8
80205	MS35338-44	5310-00-582-5965	39	12
			43	6
			46	18
			49	36
			50	9
			51	17
			58	18
			62	19
			63	16
			64	7
96906	MS35338-45	5310-00-407-9566	10	13
			15	36
			18	11
			20	8
			24	12
			25	19
			26	3
			45	4

CAGEC	PART NUMBER	STOCK NUMBER	FIG.	ITEM
96906	MS35338-45	5310-00-407-9566	49	18
			49	63
			50	16
			58	10
			62	15
			63	20
			66	12
96906	MS35338-46	5310-00-637-9541	16	22
			36	20
			42	5
			51	4
			55	1
			58	5
			62	5
96906	MS35338-47	5310-00-209-0965	1	13
			10	25
			11	31
			45	19
			82	12
80205	MS35338-48	5310-00-584-5272	36	5
96906	MS35338-51	5310-00-584-7888	36	9
			82	5
96906	MS35340-47	5310-00-655-9370	27	23
96906	MS35340-48	5310-00-834-7606	82	15
96906	MS35489-27	5325-00-290-1960	64	1
96906	MS35489-97S	5325-01-492-8991	47	22
96906	MS35490-16	5325-01-097-0347	53	18
96906	MS35649-202	5310-00-934-9758	62	11
			63	7
			65	9
80205	MS35649-264	5310-00-934-9761	50	29
96906	MS35649-282	5310-00-934-9757	62	9
			65	6
96906	MS35650-342	5310-00-934-9734	60	3
96906	MS35690-725	5310-00-721-5940	82	14
96906	MS35691-14	5310-00-891-1752	49	9
			49	52
			49	70
			49	80
96906	MS35692-13	5310-00-849-6883	8	15
			34	13
96906	MS35692-14	5310-00-401-0825	27	2
96906	MS35692-21	5310-00-842-1488	6	6
			28	17

CAGEC	PART NUMBER	STOCK NUMBER	FIG.	ITEM
96906	MS35692-5	5310-00-840-6151	34	10
80205	MS35756-17	5315-00-012-4553	27	36
80205	MS35756-8	5315-00-616-5526	49	32
96906	MS35764-1293	5306-01-046-7990	56	2
96906	MS35769-35	5330-01-352-3361	13	18
96906	MS35769-47	5330-00-269-2844	13	2
96906	MS35782-1	4820-00-684-0880	45	21
96906	MS35910-1	5310-00-982-6539	47	4
			48	19
96906	MS39132-1	6680-00-973-1263	11	26
96906	MS39230-3	4730-00-253-4413	61	14
96906	MS45904-76	5310-00-061-1258	62	22
			66	8
96906	MS51085-1	2910-00-025-3493	45	38
96906	MS51096-359	5305-00-912-5113	16	18
			52	34
96906	MS51096-364	5305-00-942-2170	18	12
96906	MS51098-63	5305-01-510-6988	31	13
96906	MS51500A4-4S	4730-00-837-7073	12	4
			45	50
96906	MS51500A6	4730-00-995-1559	21	5
96906	MS51500A8	4730-00-813-9611	41	36
96906	MS51500A8S	4730-00-947-6101	57	15
96906	MS51501A4	4730-00-825-7304	38	15
96906	MS51504A4	4730-00-647-3207	47	9
			48	51
96906	MS51504A8	4730-00-555-1764	38	24
96906	MS51504B6	4730-01-171-1935	21	15
96906	MS51505A4	4730-00-993-7764	38	7
96906	MS51506B8S	4730-01-284-7065	39	30
96906	MS51510A4	4730-00-542-5906	21	34
96906	MS51512A8	4730-00-995-1590	39	21
96906	MS51520B4	4730-00-679-9280	45	24
96906	MS51525A4	4730-01-007-5232	21	31
			23	7
			43	2
96906	MS51525A5Z	4730-00-431-9307	43	14
96906	MS51529A4	4730-00-116-6686	23	10
96906	MS51532B4S	4730-01-127-3942	43	8
96906	MS51532B5S	4730-00-948-9682	43	9
96906	MS51815-1	4730-00-854-5837	47	41
96906	MS51815-3	4730-00-096-8756	48	13
			48	32
96906	MS51815-6	4730-00-127-4461	41	25

CAGEC	PART NUMBER	STOCK NUMBER	FIG.	ITEM
96906	MS51815-8	4730-01-003-6044	50	38
96906	MS51817-25	4730-01-036-5064	41	34
96906	MS51817-5	4730-01-036-5064	41	2
96906	MS51818-3		47	28
96906	MS51819-37	4730-01-035-7544	41	16
96906	MS51819-9	4730-00-409-3893	39	15
96906	MS51820-6P	4730-00-993-5002	50	32
96906	MS51823-3	4730-00-038-7015	47	27
			48	1
			48	37
96906	MS51823-7	4730-00-153-7045	38	29
96906	MS51825-1A	4730-00-239-2503	47	26
			48	2
96906	MS51825-3A	4730-00-004-4265	48	36
96906	MS51825-7A	4730-00-146-0333	38	30
96906	MS51849-108	5305-01-013-1424	49	53
96906	MS51849-33	5305-00-227-1543	48	48
96906	MS51855-9	4730-00-689-1236	41	9
96906	MS51860-53	4730-00-466-7467	45	20
96906	MS51860-55	4730-00-375-6403	41	12
96906	MS51922-21	5310-00-959-1488	14	15
			39	23
			42	2
			42	45
			42	48
			45	17
			52	39
			55	17
96906	MS51937-7	5306-00-017-6143	81	24
96906	MS51957-28	5305-00-054-6652	50	1
96906	MS51967-2	5310-00-761-6882	63	17
			64	8
96906	MS51967-20	5310-00-763-8920	82	18
96906	MS51967-8	5310-00-732-0558	62	24
96906	MS51968-23	5310-00-763-8901	82	4
96906	MS51968-6	5310-00-905-4600	24	11
			25	18
			26	4
96906	MS52104C4-0074	4720-00-475-3435	38	4
96906	MS8005E043B	4720-01-155-5061	21	30
96906	MS8005E060A	4720-00-601-9351	21	29
96906	MS8005E074C	4720-01-415-0979	57	9
96906	MS8005E086E180	4720-01-030-1057	47	21
96906	MS8005E100C	4720-01-031-0519	38	16

CAGEC	PART NUMBER	STOCK NUMBER	FIG.	ITEM
96906	MS8005E100C	4720-01-031-0519	45	23
96906	MS8005E112F020	4720-01-173-4614	43	13
96906	MS8005E140A	4720-01-036-7474	45	49
96906	MS8005E145F000	4720-01-173-4145	43	10
96906	MS8005E160E270	4720-01-053-2019	45	14
96906	MS8005E212C	4720-01-030-8526	57	1
96906	MS8005E230F135	4720-01-053-2018	45	25
96906	MS8005E284C	4720-00-459-2835	21	28
96906	MS8005F092F020	4720-01-173-4615	43	1
96906	MS8005F145F000	4720-01-173-4613	43	11
96906	MS8005F180A	4720-00-875-5437	21	22
96906	MS8005G346BC		21	16
96906	MS8005G405BC	4720-01-510-3322	21	2
96906	MS8005H060A	4720-01-030-8796	38	32
96906	MS8005H120A	4720-01-035-6877	38	34
96906	MS8005H147C	4720-01-098-0829	57	14
96906	MS8005H237F090	4720-01-097-4732	57	3
96906	MS8005H494A	4720-01-268-7902	38	39
96906	MS8005M144A	4720-00-766-0903	22	16
96906	MS90725-3	5305-00-068-0500	62	20
			63	13
			64	4
96906	MS90726-31	5306-00-225-9086	6	9
			15	35
			18	17
			19	2
			53	3
96906	MS90726-33	5306-00-225-9088	21	25
			45	48
			62	33
			63	25
80205	MS90726-34	5306-00-225-9089	2	21
			10	14
			11	1
96906	MS90726-34	5306-00-225-9089	32	25
80205	MS90726-34	5306-00-225-9089	61	8
96906	MS90726-36	5305-00-225-9091	45	31
			49	71
			62	2
96906	MS90726-37	5305-00-225-9092	5	3
			9	3
96906	MS90726-38	5305-00-225-9093	37	23
96906	MS90726-45	5306-00-225-9100	49	64
96906	MS90726-48	5305-01-510-6207	45	2

CAGEC	PART NUMBER	STOCK NUMBER	FIG.	ITEM
96906	MS90726-52	5306-00-225-9107	45	3
96906	MS90726-60	5305-00-269-2803	42	31
			42	42
			62	6
96906	MS90727-111	5305-00-719-5219	1	5
			1	29
96906	MS90727-129	5305-00-719-5279	22	21
96906	MS90727-34	5305-00-051-4076	10	4
			15	29
96906	MS90727-42	5306-00-051-4084	20	11
96906	MS90727-84	5305-00-709-8283	2	23
96906	MS90727-85	5305-00-709-8517	10	21
			11	19
96906	MS90727-89	5305-00-709-8539	10	26
			11	46
			45	7
96906	MS9176-28	5340-00-828-2830	12	21
96906	MS9241-135		34	18
96906	MS9320-07	5310-00-941-3598	44	7
96906	MS9320-10	5310-00-194-0637	48	43
96906	MS9320-11	5310-00-194-0636	19	4
96906	MS9320-12	5310-00-184-8974	14	4
			42	9
96906	MS9320-14	5310-00-184-8992	22	6
			50	23
96906	MS9321-11	5310-00-945-0528	49	23
96906	MS9380-17	5340-00-177-4213	2	8
81343	MS9390-320	5315-00-934-0285	49	50
96906	MS9599-216	5340-01-275-3402	44	8
81349	M12285/1-5	5930-00-688-9882	61	9
81349	M13486-1-3		72	25
81349	M13486-1-3	6145-00-161-1609	BULK	29
81349	M13486-1-5		72	31
			72	42
81349	M13486/1-1		72	35
81349	M13486/1-1	6145-00-699-8963	BULK	34
81349	M13486/1-14		72	14
			74	12
81349	M13486/1-14	6145-00-705-6674	BULK	33
81349	M13486/1-5	6145-00-152-6499	BULK	32
81349	M23053/1-103-0		69	5
81349	M23053/1-103-0	5970-00-063-1495	BULK	22
81349	M23053/1-105-0		72	13
			72	34

CAGEC	PART NUMBER	STOCK NUMBER	FIG.	ITEM
81349	M23053/1-105-0	5970-00-063-1496	BULK	23
81349	M23053/1-205-0		75	18
81349	M23053/1-205-0	5970-01-085-0673	BULK	25
81349	M23053/15-204-C		70	20
			70	52
81349	M23053/15-204-C	5970-01-510-3657	BULK	12
81343	M23053/18-206-0		71	24
			72	3
81349	M23053/18-206-0	5970-01-510-4237	BULK	21
81349	M23053/5-103-4		75	7
81349	M23053/5-103-4	5970-00-787-2321	BULK	14
81349	M23053/5-103-9		75	4
81349	M23053/5-103-9	5970-00-819-9569	BULK	15
81343	M23053/5-104-0		70	14
			70	27
			70	37
			70	46
			70	57
81343	M23053/5-104-0	5970-00-812-2969	BULK	4
81343	M23053/5-104-9		70	10
			70	26
			70	39
			70	44
			70	58
81343	M23053/5-104-9	5970-00-088-2975	BULK	6
81343	M23053/5-106-9		71	13
			72	26
			72	44
81343	M23053/5-106-9	5970-00-814-2878	BULK	7
81343	M23053/5-108-0		67	45
			68	25
81349	M23053/5-108-0	5970-00-813-2967	BULK	20
81349	M23053/5-109-4		70	4
			72	7
			75	17
81349	M23053/5-109-4	5970-00-057-3545	BULK	10
81343	M23053/5-109-9		71	25
			72	4
			75	15
81349	M23053/5-109-9	5970-00-914-3118	BULK	13
81349	M23053/5-110-0		74	13
81349	M23053/5-110-0	5970-00-815-1300	BULK	19
81349	M23053/5-130-9		73	8
			BULK	18

CAGEC	PART NUMBER	STOCK NUMBER	FIG.	ITEM
81349	M23053/5-204-C		70	11
			70	38
			70	45
			70	59
81349	M23053/5-204-C	5970-00-990-9912	BULK	5
81349	M23053/8-004-C		73	9
			75	5
81349	M23053/8-004-C	5970-00-905-2068	BULK	16
81349	M23053/8-006-C		71	14
81343	M23053/8-006-C	5970-00-935-0082	BULK	8
81349	M23053/8-009-C		71	26
			72	5
			73	7
			75	14
			76	5
81343	M23053/8-009-C	5970-00-223-8318	BULK	3
81349	M23053/8-109-C		70	5
81349	M23053/8-109-C	5970-01-513-1424	BULK	11
81349	M23053/8-109-0		70	3
81349	M23053/8-109-0	5970-01-510-2504	BULK	9
81349	M23053/8-109-9		73	6
81349	M23053/8-109-9	5970-01-149-7442	BULK	24
81349	M23053/8-205-0		72	29
			72	43
81349	M23053/8-205-0	5970-01-510-2508	BULK	17
81349	M24066/2-312	5340-00-724-7015	44	4
81349	M43436/1-1	9905-00-752-4649	70	12
			70	40
			70	53
			70	61
			71	11
			72	15
			72	36
			75	8
81349	M43436/1-2	9905-00-841-4445	71	12
81349	M43436/1-3	9905-00-893-3570	71	27
			72	16
			72	37
			74	11
			76	4
81349	M43436/2-1	9905-01-069-7222	67	44
81349	M43436/3-1	9905-01-013-8723	67	15
81349	M45913/1-14FG5C	5310-00-225-6409	34	27
81349	M45913/1-4CG5C	5310-00-088-1251	37	32

CAGEC	PART NUMBER	STOCK NUMBER	FIG.	ITEM
81349	M45913/1-6CG5C	5310-00-087-4652	46	8
81349	M45913/2-6FG5C	5310-00-959-1488	1	10
			1	20
			10	12
			11	4
			15	19
			27	19
			29	1
			31	38
			34	25
81349	M81044/12-16-0		70	13
			70	28
			70	54
			70	62
			75	6
81349	M81044/12-16-0	6145-01-028-0985	BULK	30
81349	M83248/1-012	5331-00-166-0980	21	32
			22	9
			22	9
			23	9
			23	9
81349	M83248/1-017	5331-00-166-0993	18	2
81343	M83248/1-114	5331-00-166-1063	57	5
81349	M83248/1-118	5331-00-166-1072	13	20
81349	M83248/1-120	5331-00-166-1076	14	9
81349	M83248/1-123	5331-00-167-5112	18	1
81349	M83248/1-126	5331-00-167-5114	35	10
81349	M83248/1-212	5331-00-166-8403	14	10
81349	M83248/1-327	5331-01-005-3213	15	37
81349	M83248/1-331	5331-00-167-5157	26	30
81349	M83248/1-911	5331-00-165-1975	35	3
81349	M83461/1-006	5331-01-107-4956	40	3
81349	M83461/1-111	5331-01-107-3121	40	4
81349	M83461/1-325	5331-01-160-4343	30	15
81349	M83461/1-335	5330-01-160-4348	26	23
81349	M85049/31-16W	5935-01-182-6802	75	3
81349	M85049/31-22W	5935-01-188-6979	75	13
81349	M85049/31-32W	5935-01-388-5662	72	8
81349	M85049/52-S-22W	5935-01-367-9369	68	3
81349	M85049/52-1-22W	5935-01-172-8574	73	4
81349	M85049/52-1-32		70	31
80205	NASM12333	5340-00-725-5280	21	36
			65	15
80205	NASM20995NC32	9525-00-355-6072	BULK	35

CAGEC	PART NUMBER	STOCK NUMBER	FIG.	ITEM
80205	NASM20995NC40	9525-00-990-7799	BULK	36
80205	NAS1149C1032R	5310-01-423-7133	49	21
80205	NAS1149F0363P	5310-00-167-0818	41	22
			45	45
			47	19
			48	40
			54	13
80205	NAS1149F0463P	5310-00-141-1795	11	32
80205	NAS1149F0563P	5310-00-167-0820	2	15
			2	20
			5	4
			9	4
			10	3
			11	3
			13	16
			21	11
			21	19
			26	10
			28	23
			30	18
			32	24
			39	16
			45	5
			49	74
			55	16
80205	NAS1149F0763P	5310-01-391-7138	2	24
			10	24
			27	21
			45	8
80205	NAS1149F1490P	5310-01-429-5082	21	38
80205	NAS1523-6Y	5330-00-003-9302	14	5
01843	NT7899		35	12
18876	PMS90727001-06	5306-00-068-0513	49	35
01843	RN780807		35	9
80063	SCB85930	4720-00-278-1113	BULK	1
63728	SC587195	5330-01-393-9091	20	7
63728	SC8725239	5330-01-393-9087	13	14
01843	SD783154	2910-01-041-3464	35	2
00334	SK2155	6685-00-618-1822	82	11
15653	SPL51712-6	5310-01-151-2732	15	22
			24	3
			25	6
			50	25
01843	SP7830		35	18

CAGEC	PART NUMBER	STOCK NUMBER	FIG.	ITEM
99066	SR7827	5365-00-089-8836	35	5
99066	SR7828-1	5365-00-878-9932	35	6
01843	SR7828-2		35	6
01843	SR7828-3		35	6
01843	SR7828-4		35	6
01843	SR7828-5		35	6
01843	SR7829		35	16
06481	T-218758	4730-00-908-6293	58	8
83616	TD2-03420	4720-00-804-9249	BULK	28
56501	TG10	5940-00-705-6710	67	22
			68	17
			75	9
56501	TG11	5940-00-705-6711	68	20
56501	TG2	5940-00-705-6702	71	9
56501	TG33	5940-00-735-5520	71	23
56501	TG9	5940-00-705-6709	72	47
01843	VA77162		35	15
01843	VB77144-4		35	14
55193	VD-109106	6685-00-734-6573	22	8
81978	V5S55680	4810-00-487-2775	41	24
			45	52
75394	WA29906		36	21
75394	WA29908	5331-01-433-5288	36	14
75394	WA29909		36	19
66503	WT28163	5120-00-752-9755	81	20
81348	WW-P-471ACBBDG	4730-01-022-6066	12	3
			17	9
81348	WWP460	4730-00-044-4705	61	12
93568	00242-0114	4730-00-322-8456	57	18
14153	02800	5330-01-393-7137	10	15
			11	41
40223	032505E0140	4720-00-723-7397	57	11
83299	0612596-00	4730-00-908-3193	10	17
			11	38
83299	0612596-00	4730-00-908-3198	20	4
83299	0612596-00	4730-00-908-3193	30	20
83299	0612596-00	4730-00-908-3198	50	41
59501	10-187565-1	2815-00-117-9337	47	1
59501	10-187565-2	2990-00-369-8766	48	15
77820	10-35527	5999-00-368-4852	71	5
			72	22
			74	5
77820	10-40457-12S	5975-00-522-7125	67	5
77820	10-40457-14S	5975-00-752-7644	67	41

CAGEC	PART NUMBER	STOCK NUMBER	FIG.	ITEM
77820	10-40814-2	5325-00-432-4724	67	42
77820	10-40817-10		67	31
77820	10-40836-3	5365-00-678-4258	74	7
61228	10001A	2520-01-162-7035	22	11
56161	10503979	4730-00-908-3193	21	6
78385	10595A	2930-01-024-6706	22	12
19207	10863598	5340-00-107-4286	63	14
			64	6
19207	10863816	5340-00-959-8422	62	34
			66	11
19207	10863824	5306-00-678-4262	82	20
19207	10865001	5340-00-402-5204	59	6
19207	10865022	4710-00-406-4622	20	15
19207	10865122		48	33
19207	10865180	4710-00-833-8164	20	3
19207	10865183		6	7
19207	10865184	5306-00-406-1542	6	8
19207	10865247	5340-00-453-5376	53	16
19207	10865283	2805-00-407-6761	10	19
			11	17
			11	17
19207	10865290	4730-00-803-7728	38	23
19207	10865321	5305-00-891-7871	49	10
19207	10865322		49	7
19207	10865324		49	6
19207	10865361	2815-01-005-1463	29	3
19207	10865374	5340-00-114-0093	47	29
			48	26
19207	10865381	5310-00-239-5848	29	14
19207	10865382		29	15
19207	10865383		29	12
19207	10865393	3040-00-767-3200	29	11
19207	10865466	4730-00-805-0676	48	31
19207	10867369	4720-00-706-9144	44	2
19207	10874979	5930-00-771-8119	61	21
0N942	10875100	5935-00-745-7885	69	17
19207	10875101	5935-00-745-7886	69	18
19207	10882609		34	23
19207	10882610	5342-00-795-1800	6	16
19207	10882611	4730-00-617-8626	34	21
19207	10882613	3020-00-817-9538	6	20
19207	10882615	5210-00-793-7898	81	18
19207	10882616	5210-00-793-7899	81	17
19207	10882617	5210-00-793-7897	81	19

CAGEC	PART NUMBER	STOCK NUMBER	FIG.	ITEM
19207	10882641	5995-00-879-1666	60	4
19207	10882649		33	18
19207	10882650		33	19
19207	10882651	5365-00-795-7952	81	27
19207	10882747	5120-00-793-7895	81	14
19207	10882749		27	26
19207	10882750	5306-00-413-4373	56	9
19207	10882763-1		39	18
19207	10882764	4820-00-795-1795	39	26
19207	10882765	2920-00-455-5835	56	11
			59	10
19207	10882766	5340-00-937-1450	39	25
19207	10882768	4710-00-821-0659	39	14
19207	10882773	2920-00-177-7844	27	25
19207	10882777		48	33
19207	10882790	4910-00-795-7951	81	22
19207	10882826	9905-00-407-5099	77	6
19207	10882827	9905-00-407-5100	77	5
19207	10882888	5120-00-795-7956	81	1
19207	10882888-1	5120-01-005-3001	81	2
19207	10882888-2	5120-01-005-3000	81	3
19207	10882940	4720-00-792-5393	38	22
19207	10882945	4910-00-795-7954	79	11
19207	10882949	4910-00-795-7958	81	12
19207	10882953	5120-00-448-0400	81	5
19207	10882954	5120-00-448-0401	81	4
19207	10882958	4910-00-795-7955	79	1
19207	10882963	4710-00-795-7953	81	13
19207	10882970	5307-00-410-5830	3	11
19207	10883052	5180-00-448-0402	80	12
19207	10883053	5120-00-448-7993	80	11
19207	10883080	5306-00-453-5589	59	3
19207	10883083	4710-00-406-4623	20	10
19207	10883737	5330-00-803-0259	58	17
19207	10883740	4720-00-771-6968	58	15
19207	10883745	2990-00-771-6969	58	7
19207	10883748	4730-00-245-8162	58	16
19207	10883940	5340-00-242-5601	58	21
19207	10883941	5340-00-453-5595	58	22
19207	10884033	5340-00-456-1798	58	14
19207	10884034	5340-00-449-2580	58	12
19207	10884037	4710-00-063-8127	58	13
19207	10887570	6150-00-118-8730	70	1
19207	10889712		33	12

CAGEC	PART NUMBER	STOCK NUMBER	FIG.	ITEM
19207	10898746	5306-00-837-9469	33	13
19207	10898756	2930-00-402-4420	51	45
19207	10898763	5305-01-510-8434	51	23
19207	10898777	3020-00-851-9176	27	7
19207	10898778	3020-00-861-3829	7	1
02978	10898779	3040-00-861-1447	27	9
19207	10898793-1	4720-00-177-6186	21	7
19207	10898794	4720-00-896-6166	10	18
			11	39
			21	9
			30	21
			50	42
19207	10898813	5307-01-027-4732	1	17
19207	10898915	3040-00-861-1448	27	3
19207	10898928	4910-00-986-9873	78	4
19207	10898933	5330-00-899-1504	1	33
19207	10898993	5340-01-011-9020	34	8
19207	10898994	3020-00-573-4568	34	15
19207	10898995		34	7
19207	10899002	5340-01-011-9021	34	17
19207	10899003		34	19
19207	10899180	4910-00-870-6283	79	10
19207	10912260	4910-00-856-4137	78	2
19207	10912269	8145-00-856-8147	82	1
19207	10912270	5330-00-493-2938	82	3
19207	10912271		82	7
19207	10912298		82	2
19207	10912362	5365-01-011-9026	1	15
19207	10912362-1		1	16
19207	10912452-4	2910-01-509-7176	35	1
19207	10912453	2815-00-404-7444	7	2
19207	10912558	5330-00-438-1861	27	16
19207	10912589	5220-00-988-8774	79	5
19207	10912589-1	5220-01-005-3003	79	6
19207	10912589-2	5220-01-005-3002	79	7
19207	10921622-2	4730-01-026-1848	47	13
19207	10924254	5935-01-035-6792	74	4
19207	10924257		74	3
19207	10935359	5331-00-078-4866	35	8
19207	10935368	5330-01-031-6954	49	38
19207	10935386	5315-00-586-6076	49	57
19207	10935396	5340-00-564-9676	49	61
19207	10935397	5330-00-586-6071	49	60
19207	10935398	5330-01-511-5567	49	54

CAGEC	PART NUMBER	STOCK NUMBER	FIG.	ITEM
19207	10935400	5340-00-596-4020	49	11
19207	10935447	5325-00-182-4707	53	14
19207	10935471	2990-00-411-8330	58	3
19207	10935476	5120-00-789-4881	81	23
19207	10935478	5330-00-498-6341	42	46
19207	10935536	4730-00-902-3188	39	8
19207	10935537	5330-00-902-3189	32	22
19207	10935540		28	5
19207	10935541/1	3040-01-013-1783	31	1
19207	10935542		31	5
19207	10935607		34	26
19207	10935614	5360-00-410-5836	15	5
			15	13
19207	10935619		15	7
19207	10935621	5330-00-410-9803	15	38
19207	10935623	2590-00-406-4621	15	1
19207	10951061		35	17
19207	10951075	2520-00-435-4564	32	1
19207	10951076		32	3
19207	10951077	5365-01-114-7409	32	4
19207	10951078	5315-01-511-3707	32	6
19207	10951079	2930-00-435-4568	32	11
19207	10951081		32	9
19207	10951083	2520-01-160-8074	32	8
19207	10951084	2520-00-435-4572	32	7
19207	10951108	4730-00-501-7013	57	16
19207	10951119		32	2
19207	10951221		5	2
19207	10951221-1		5	2
19207	10951221-2		5	2
19207	10951221-3		5	2
19207	10951221-4		5	2
19207	10951230		82	6
19207	10951231		82	19
19207	10951239	2815-00-150-7406	9	12
19207	10951304	2815-00-150-7405	5	1
19207	10951304-1	2815-00-213-0834	5	1
19207	10951304-2	2815-00-213-0835	5	1
19207	10951304-3	2815-00-213-0836	5	1
19207	10951304-4	2815-00-213-0837	5	1
02978	10951334	4730-00-402-5143	39	10
19207	10951368	4710-00-401-4368	21	8
19207	10951369	3110-00-462-0392	32	10
19207	10951434	4330-00-134-4734	45	9

CAGEC	PART NUMBER	STOCK NUMBER	FIG.	ITEM
19207	10951434-1		45	10
25184	1103-8	5330-00-814-6675	5	7
			29	28
16764	110730	5310-00-637-9541	15	24
19207	11602061	2940-00-808-2421	46	21
19207	11602062		46	22
19207	11602063	2910-00-808-2470	45	6
			46	14
19207	11610010	2815-00-150-7407	9	11
19207	11610171	5120-00-875-9556	81	10
19207	11610232	5331-01-102-4685	46	20
16128	11612239	4710-01-296-0469	19	49
19207	11640392	6645-00-420-5072	83	1
19207	11640861-1	5310-00-168-2906	5	22
19207	11641744		46	7
19207	11641745		46	6
19207	11641746		46	13
19207	11641857		46	5
19207	11641867		46	12
19207	11641868		46	11
19207	11641919	5340-00-193-8211	53	17
19207	11641922	2910-00-406-4615	15	8
19207	11641927	4710-00-192-9436	15	28
19207	11642079	3040-00-397-3319	27	35
19207	11642088	5365-00-460-5831	80	9
19207	11642089	5365-00-003-1010	80	10
19207	11642092-1		47	5
19207	11642092-2		48	16
19207	11642119-1	4730-01-045-1120	47	25
			48	35
19207	11642121-1	2815-01-005-2993	28	1
19207	11642122	3040-00-410-1135	29	5
19207	11642123		28	20
19207	11655451	2815-00-410-1976	74	1
19207	11655454	6150-00-423-3622	72	1
19207	11655457	5995-00-399-5298	73	1
19207	11655469	2920-00-441-8137	56	1
19207	11662775-1		79	4
19207	11662775-2		79	3
19207	11668067	3120-00-275-1610	9	28
19207	11668259	5945-01-016-0875	49	37
19207	11668287	6110-00-294-2332	79	8
19207	11668315		8	11
19207	11668315-1		8	11

CAGEC	PART NUMBER	STOCK NUMBER	FIG.	ITEM
19207	11668315-2		8	11
19207	11668315-3		8	11
19207	11668315-4		8	11
19207	11668316		8	12
19207	11668316-1		8	12
19207	11668316-2		8	12
19207	11668316-3		8	12
19207	11668316-4		8	12
19207	11668317		8	13
19207	11668317-1		8	13
19207	11668317-2		8	13
19207	11668317-3		8	13
19207	11668317-4		8	13
19207	11668614	5330-00-492-1774	27	13
19207	11668619	4330-00-000-0145	14	8
19207	11668621	5930-01-021-1559	61	13
19207	11668622	5310-01-014-1087	19	6
19207	11668623-1	5340-00-468-1596	12	29
19207	11668623-3	5340-01-014-7060	17	7
19207	11668625	4330-00-410-1212	45	55
19207	11668628	5330-00-492-1776	27	24
19207	11668629	4730-00-466-7465	45	22
19207	11668634	4730-01-032-1393	57	13
19207	11668688	5306-01-013-7020	37	37
19207	11668689	4730-01-434-5429	57	10
19207	11668690	4820-01-011-9665	57	7
19207	11668891	4730-01-026-0443	39	28
19207	11669424	4820-01-073-0080	14	1
19207	11669685	4730-01-109-7971	41	33
19207	11669695	5330-01-196-7948	34	6
19207	11669749	4820-01-136-4681	41	6
19207	11669771	4820-01-163-7156	23	12
19207	11671357	6150-01-241-9352	76	1
19207	11671485	5340-01-044-5315	51	1
19207	11671485-1		51	3
19207	11671792	2920-01-245-7656	71	1
19207	11671816	5995-01-245-7651	69	1
19207	11671981	5342-01-241-9446	65	4
19207	11672386	6150-01-245-7645	70	55
19207	11673850	6150-00-476-0381	62	25
01417	11673851	5340-00-466-7464	62	13
19207	11673852	5340-00-397-3283	62	16
19207	11673853	5342-00-394-9701	62	30
19207	11673854	5342-00-394-9690	63	27

CAGEC	PART NUMBER	STOCK NUMBER	FIG.	ITEM
19207	11673855	5340-00-475-8216	63	33
19207	11673856	6150-00-476-0371	62	23
19207	11678085-1	9320-01-014-8683	BULK	26
19207	11678085-2		BULK	27
19207	11682579	4720-00-410-1180	58	2
19207	11682581	4710-00-410-1218	48	10
14351	11682593	4730-00-490-2172	10	30
			11	14
19207	11682595	5995-00-499-1782	56	16
19207	11682595-1	6150-01-008-1440	74	15
19207	11682595-2	6150-01-008-1441	59	12
			59	12
19207	11682596-1	4730-01-047-2605	48	3
19207	11682601	5360-01-011-0732	49	40
19207	11682602	5340-01-030-4401	38	31
19207	11682606	5340-01-046-6826	49	41
19207	11682609	5340-01-046-8943	15	20
19207	11682610	5340-01-052-5072	15	26
19207	11682615	5340-00-563-6951	39	29
19207	11682620-1		42	35
19207	11682624	4710-00-561-7705	20	12
19207	11682625	4730-00-561-7801	42	19
19207	11682629-1	5340-01-010-9086	42	34
19207	11682645	2815-01-024-9293	7	6
19207	11682647		15	15
19207	11682658	5340-00-466-7850	49	68
19207	11682677	2990-00-563-6905	7	8
19207	11682701	2815-00-394-9725	10	32
19207	11682702		10	34
19207	11682703	2815-00-394-9726	11	9
19207	11682704		11	11
19207	11682722	3020-00-398-6713	27	33
19207	11682723	6150-00-410-1232	75	11
19207	11682724	5995-00-507-7779	75	1
19207	11682751	4710-01-012-4645	37	6
19207	11682752	4710-01-012-4646	37	5
19207	11682753	4710-01-012-4650	37	4
19207	11682754	4710-01-012-4651	37	3
19207	11682755	4710-01-012-4647	37	2
19207	11682756	4710-01-012-4648	37	1
19207	11682757	4710-01-012-4655	37	7
19207	11682758	4710-01-012-4652	37	8
19207	11682759	4710-01-012-4649	37	9
19207	11682760	4710-01-012-4653	37	10

CAGEC	PART NUMBER	STOCK NUMBER	FIG.	ITEM
19207	11682761	4710-01-014-8156	37	11
19207	11682762	4710-01-012-4654	37	12
19207	11682767	3110-01-013-9708	49	65
19207	11682768	2930-01-005-1549	52	44
			52	44
19207	11683925	4820-00-394-9693	13	19
19207	11683926	4730-00-423-3677	13	17
19207	11683929		19	29
19207	11683930	5306-00-486-0402	8	4
19207	11683932		8	3
19207	11683933		8	5
19207	11683934	2815-00-394-9702	8	1
19207	11683935	2815-00-467-3407	8	8
19207	11683936	5340-00-410-1125	51	34
19207	11683938		51	25
19207	11683939	5340-00-399-5301	52	3
19207	11683941	5340-00-432-0056	52	40
19207	11683941-1	5340-01-032-7369	52	40
19207	11683943	2815-00-397-3316	8	10
19207	11683943-1	2815-00-427-0551	8	10
19207	11683943-2	2815-00-434-6593	8	10
19207	11683943-3	2815-00-427-0553	8	10
19207	11683943-4	2815-00-434-6594	8	10
19207	11683944		19	21
19207	11683945		19	31
19207	11683946		19	38
19207	11683947	3120-00-423-4100	8	6
19207	11683948	5310-00-486-0399	8	2
19207	11683950		16	3
19207	11683951		19	28
19207	11683952	4320-00-392-9514	22	17
			22	17
19207	11683954	2520-00-394-9713	52	38
19207	11683955		19	19
19207	11683956		19	20
19207	11683957		19	33
19207	11683958		19	32
19207	11683959		19	34
19207	11683960		19	53
19207	11683961		19	11
19207	11683962		19	18
19207	11683963		19	8
19207	11683964	5365-00-533-6657	21	13
19207	11683965		19	48

CAGEC	PART NUMBER	STOCK NUMBER	FIG.	ITEM
19207	11683968		19	14
19207	11683969		19	9
19207	11683970	2510-00-394-9722	10	22
			11	20
19207	11683971		19	45
19207	11683972		8	7
19207	11683972-1		8	7
19207	11683972-2		8	7
19207	11683973		19	42
19207	11683974	5342-00-388-9993	51	29
19207	11683975	4710-00-410-1963	18	3
19207	11683976	5342-00-388-9994	51	20
19207	11683977	2815-00-410-1131	53	8
19207	11683983	2815-00-490-5551	51	15
19207	11683984	5340-00-397-3313	52	43
19207	11683985	5340-00-394-9700	52	9
19207	11683985-1		52	10
19207	11683987	2815-00-388-9988	24	15
19207	11683988	2815-00-388-9992	25	17
19207	11683989	2815-00-392-9420	24	2
19207	11683990	2815-00-392-9426	25	11
19207	11683991	2990-00-397-3374	24	16
19207	11683992	2990-00-604-7366	24	14
19207	11683993	2990-00-397-3383	25	14
19207	11683994	2990-00-389-0197	25	8
19207	11683995		17	12
19207	11683996		16	9
			17	1
19207	11683997		19	35
19207	11683998	2815-00-394-9705	16	1
19207	11683999	5330-00-394-9723	16	19
19207	11684002	5340-00-492-1561	16	4
19207	11684003-1	5342-01-010-9089	54	6
19207	11684003-2	5342-01-011-9019	54	5
19207	11684004-1	5342-01-012-9150	54	2
19207	11684004-2	5342-01-007-7209	54	1
19207	11684006	6680-00-423-4051	15	33
19207	11684007	5330-00-410-1050	16	5
19207	11684008	5340-00-397-3269	1	24
19207	11684009	5340-00-397-3271	1	21
19207	11684010	4330-00-410-1165	45	30
19207	11684013	5340-00-409-8130	19	5
19207	11684017	5340-00-394-9706	52	1
19207	11684018	2590-00-399-5302	15	34

CAGEC	PART NUMBER	STOCK NUMBER	FIG.	ITEM
19207	11684018	2590-00-399-5302	15	34
19207	11684019	5342-00-398-7102	45	46
19207	11684020	3040-00-410-1182	49	4
19207	11684021		49	28
19207	11684022	4710-00-410-1222	45	56
19207	11684023	3040-00-410-1234	49	33
19207	11684024	4710-00-399-5304	47	10
19207	11684026	2520-00-467-3420	51	41
19207	11684028	3040-00-399-5305	49	25
19207	11684032	5340-00-423-4104	49	75
19207	11684033	2815-00-397-3314	13	10
19207	11684034	5310-00-477-0789	12	25
19207	11684035	2815-00-410-1196	16	6
19207	11684036	2815-00-397-3305	18	9
19207	11684037		18	6
19207	11684038		18	7
19207	11684039-2	5330-00-492-1784	18	15
19207	11684039-4	5330-00-483-9490	18	14
19207	11684040	5330-00-486-0302	16	16
19207	11684041	5340-00-392-9515	52	15
19207	11684041-1		52	16
19207	11684042	5310-01-014-1090	19	27
19207	11684043		14	6
19207	11684043-1	2940-01-070-5969	14	2
19207	11684044		19	12
19207	11684045		19	13
19207	11684046		19	52
19207	11684047	5330-01-298-4850	14	7
19207	11684048	5340-00-392-9547	52	27
19207	11684048-1		52	28
19207	11684049	2930-00-392-9559	22	19
19207	11684050	5342-00-392-9588	22	23
19207	11684051	5342-00-392-9564	22	20
19207	11684052	5340-00-423-3976	18	16
19207	11684053	2940-00-392-9633	12	23
19207	11684054		16	10
19207	11684055	5342-00-397-3317	61	2
19207	11684057	2920-00-398-6540	56	5
19207	11684058	5330-00-486-0320	12	24
19207	11684059	3040-00-394-9695	33	3
19207	11684060	4330-00-516-1265	12	27
19207	11684061		16	11
19207	11684062	2815-00-410-1143	16	17
19207	11684063	5340-00-410-1216	33	28

CAGEC	PART NUMBER	STOCK NUMBER	FIG.	ITEM
19207	11684064	5360-00-410-1983	33	24
19207	11684065	5340-00-533-3888	33	29
19207	11684066	5360-00-510-4109	12	26
19207	11684070-1	2520-00-394-9714	22	22
19207	11684070-2	2520-00-397-3324	22	4
19207	11684073-2		3	5
19207	11684073-3		17	11
19207	11684073-6		17	10
19207	11684075	5330-00-492-1777	18	5
19207	11684078	2815-00-394-9703	8	16
19207	11684079-1		52	18
			52	31
19207	11684079-2		52	20
			52	30
19207	11684079-3		52	19
			52	32
19207	11684082-1	5340-00-475-8217	22	24
19207	11684082-2	5340-00-394-9717	22	5
19207	11684085	2930-00-392-9555	22	3
19207	11684087		2	3
19207	11684088	2815-00-394-9707	51	8
19207	11684088-1		51	11
19207	11684090		3	9
19207	11684091	5365-00-518-5041	16	14
19207	11684092	5340-00-423-3618	51	41
19207	11684093-1	5310-00-486-0406	51	10
			51	27
			52	7
			52	11
			52	17
			52	33
			53	5
			53	11
			53	20
			53	23
19207	11684093-2	5310-00-486-0412	51	9
			51	9
			51	32
			52	21
			52	26
			52	29
19207	11684095	5330-00-486-0346	16	13
19207	11684096	2910-01-011-9105	48	29
19207	11684097	4820-00-467-2578	47	43

CAGEC	PART NUMBER	STOCK NUMBER	FIG.	ITEM
19207	11684100	5340-00-447-3661	48	38
19207	11684101	5945-00-423-3869	47	44
19207	11684104	3120-00-510-4115	19	59
19207	11684105-2		19	15
			19	51
19207	11684105-4		19	10
19207	11684105-5		19	41
19207	11684106	5365-00-486-0405	52	36
19207	11684107-2		19	17
			19	47
19207	11684108	2815-00-394-9729	2	1
19207	11684111	4730-01-016-5907	57	2
19207	11684126	5340-00-427-0584	45	18
19207	11684127	6150-00-423-3850	45	51
19207	11684128	5340-00-410-1151	45	37
19207	11684129-1	2910-01-073-0124	36	1
19207	11684130-1	5120-00-466-5948	80	1
19207	11684130-2	5120-01-018-8690	80	2
19207	11684131	3040-01-018-3701	49	24
19207	11684132	5340-00-410-1045	52	8
19207	11684133	4730-00-448-9896	12	14
19207	11684135	2815-00-394-9719	10	20
			11	18
19207	11684137-1	5342-00-409-1483	42	41
19207	11684137-2	5340-00-399-5300	42	26
19207	11684143	5340-01-010-6171	37	13
19207	11684144	5340-01-010-6172	37	14
19207	11684145	5340-01-010-6170	37	16
19207	11684146	5340-01-010-6173	37	15
19207	11684147	5340-01-010-6174	37	20
19207	11684148	5340-01-010-6169	37	38
19207	11684153	5180-01-005-2995	81	8
19207	11684154	5340-01-026-2008	37	26
19207	11684155	5340-01-026-4024	37	18
19207	11684156	5340-01-017-6947	37	24
			41	30
19207	11684157	5342-01-015-9789	37	25
			41	31
19207	11684158	5342-01-017-4508	37	19
19207	11684159	5342-01-015-9788	37	27
19207	11684160	5365-01-021-3088	37	22
19207	11684162	2920-01-048-6052	56	4
19207	11684166	5120-01-005-2996	81	7
19207	11684172	4710-01-005-5237	20	15

CAGEC	PART NUMBER	STOCK NUMBER	FIG.	ITEM
19207	11684182	5342-01-011-9022	42	26
19207	11684184	4730-01-022-6012	42	13
19207	11684185-1	2990-01-085-3831	24	16
19207	11684186	2990-01-011-2319	42	23
19207	11684187-1	2990-01-085-3832	25	14
19207	11684193	2990-01-017-5186	24	14
19207	11684194	2990-01-017-5187	25	8
19207	11684195	4710-01-048-3208	20	19
19207	11684196	5340-01-046-6814	42	41
19207	11684197	2990-01-011-2665	7	7
19207	11684198	9905-01-007-7165	77	3
19207	11684201	4140-01-017-6850	51	8
19207	11684201-1		51	11
19207	11684202		42	29
19207	11684203	5340-01-048-8600	42	27
19207	11684208	4730-01-011-3961	38	6
19207	11684213	4710-01-012-6712	48	10
19207	11684217	5340-01-017-6946	52	2
19207	11684219	5340-01-030-8870	52	5
19207	11684219-1		52	6
19207	11684220	5340-01-017-6795	52	1
19207	11684221-1	2815-01-024-9266	54	2
19207	11684221-2	5342-01-011-2322	54	1
19207	11684224	2520-01-024-9267	51	30
19207	11684224-1		51	31
19207	11684231	4710-01-049-8930	26	19
19207	11684235	5340-01-010-9347	24	19
			25	15
19207	11684236	5340-01-010-9348	24	18
			25	13
19207	11684246	5340-01-010-8946	52	24
19207	11684246-1		52	25
19207	11684250	3040-01-026-0702	49	78
19207	11684255	4710-01-009-4306	38	11
19207	11684256	4710-01-011-9104	38	14
19207	11684260	2910-01-022-6967	45	12
19207	11684261	2910-01-017-1482	45	28
19207	11684263		33	16
19207	11684264	2930-01-007-5276	51	35
19207	11684265	2930-01-012-2879	51	38
19207	11684266	2930-01-007-5277	51	39
19207	11684267		33	26
19207	11684276-1	5340-01-030-8726	62	18
19207	11684276-2	5340-01-030-6928	63	28

CAGEC	PART NUMBER	STOCK NUMBER	FIG.	ITEM
19207	11684294	4720-01-026-4828	39	27
19207	11684295	5342-01-023-7838	45	30
19207	11684297	9905-01-174-7499	77	8
81343	12-8-140140C	4730-00-278-3888	61	10
10001	12Z329PC93	4730-00-555-8291	12	19
			17	8
21450	120214	5310-00-015-0214	11	2
19207	12254202		49	55
19207	12254203		49	58
19207	12254205	3040-01-027-0761	49	49
19207	12254213	5120-01-034-1698	80	20
19207	12254215	3040-01-054-9730	33	11
19207	12254217	2815-01-053-3789	33	6
19207	12254218		33	14
19207	12254221	2910-01-037-4741	45	27
			46	1
19207	12254231	5340-01-053-4866	46	2
			46	16
19207	12254235	5330-01-037-0800	32	20
19207	12254238		6	3
19207	12254244	5120-01-039-2809	81	21
19207	12254249	2815-01-233-9709	6	1
19207	12254260	5365-01-048-8643	13	1
19207	12254261	5360-01-052-0941	13	3
19207	12254278	2910-01-041-3370	47	6
			48	17
19207	12254282	5120-01-043-5205	80	19
19207	12254292	5340-01-038-8296	52	41
19207	12254293	5340-01-041-2420	37	34
19207	12254293-2	5340-01-433-0523	37	35
19207	12254294	5365-01-044-8400	37	33
19207	12254295	5340-01-047-9403	37	36
19207	12254296	5220-01-084-1230	81	28
19207	12254297	5365-01-047-9404	1	25
19207	12254331	5360-01-047-9364	49	69
19207	12254369	5340-01-081-1686	62	31
			63	24
19207	12254374	2920-01-065-2016	63	11
19207	12254376	6150-01-065-6631	67	1
19207	12254378	2920-01-068-3385	68	1
19207	12254380	4730-01-101-4110	22	15
19207	12254389		40	2
19207	12254390		40	1
19207	12254391		40	5

CAGEC	PART NUMBER	STOCK NUMBER	FIG.	ITEM
19207	12254392		40	6
19207	12254395		40	7
19207	12257229	4910-01-048-8706	78	3
01556	1227-6	5120-00-723-6833	80	23
19207	12275712	5945-01-070-5962	41	19
19207	12275727	3020-01-073-4085	53	7
19207	12275750	6680-01-119-0378	15	33
19207	12275763		34	28
19207	12275765		34	29
19207	12275775	5210-01-099-1477	79	13
19207	12275780	4710-01-109-8031	41	13
19207	12275782	4710-01-109-8033	41	26
19207	12275788		34	5
19207	12275789	2990-01-136-0965	34	1
19207	12275790	3040-01-184-4813	34	2
19207	12275793		6	23
19207	12275796	5342-01-147-3136	59	5
19207	12275797	5340-01-145-4316	56	10
19207	12275805	5120-01-119-4172	80	18
19207	12275807	4710-01-146-1904	41	27
19207	12275808	4710-01-146-1903	41	15
19207	12275809	5340-01-136-4673	41	3
19207	12275810	4710-01-140-6558	41	27
19207	12275812	4710-01-139-1863	41	15
19207	12275822	5340-01-145-8301	50	37
19207	12275823	5340-01-145-8302	50	34
19207	12275824	5330-01-145-8290	50	10
19207	12275831	4710-01-145-8311	50	31
19207	12275842	5930-01-147-7912	43	4
19207	12275844	2990-01-156-6225	50	11
19207	12275861	5340-01-145-8303	50	18
19207	12275880	4710-01-150-4822	50	43
19207	12275883	4720-01-146-1887	50	12
19207	12275889	5640-01-146-1898	50	3
19207	12275890	5640-01-146-1889	50	30
19207	12275891	5640-01-146-1890	50	24
19207	12275892	5640-01-146-1891	50	27
19207	12275893	2950-01-510-3622	42	11
19207	12293251-3		70	6
			70	41
			72	6
			75	16
			76	6
19207	12293251-3	6145-01-102-4660	BULK	31

CAGEC	PART NUMBER	STOCK NUMBER	FIG.	ITEM
21450	122961		29	16
			30	25
			31	17
			33	5
21450	122978		42	32
19207	12314561	5340-01-146-1895	50	19
19207	12314564	4710-01-146-1909	50	15
19207	12314565	4710-01-146-1900	50	39
19207	12314567	4320-01-268-2464	50	26
19207	12314568	4710-01-146-1910	50	14
19207	12314569	4710-01-146-1901	50	7
19207	12314574	4720-01-146-1888	50	13
19207	12314591	5340-01-145-8307	15	40
19207	12314592		15	15
19207	12314593	2590-01-145-8312	15	8
19207	12314598	2590-01-152-8806	53	13
19207	12314599	2835-01-152-7118	53	1
19207	12314617	9905-01-160-2693	77	3
19207	12314619	6150-01-150-9771	72	11
19207	12314626	5342-01-157-8846	23	3
19207	12314637	5340-01-165-0580	50	35
19207	12314646	9905-01-170-9979	77	3
19207	12314647		49	47
19207	12314648	5340-01-282-8165	49	39
19207	12314649	3040-01-270-5933	49	51
19207	12314650	5360-01-274-3562	49	14
19207	12314651	5995-01-262-9527	70	42
7B096	12314656	3040-01-270-5934	49	43
19207	12314657	5945-01-268-3577	49	34
19207	12314659	5340-01-275-5033	15	12
19207	12314745	5995-01-255-0890	70	21
19207	12354303	5330-01-207-6449	50	33
19207	12354347	5340-01-249-7910	43	5
19207	12354367	4710-01-330-8073	41	1
19207	12354381	5340-01-332-9372	42	14
19207	12354382	5340-01-290-1297	62	7
19207	12354383	5340-01-287-3981	62	7
19207	12354384	5995-01-290-1299	68	1
19207	12354385	5995-01-290-1300	67	1
19207	12354391	9905-01-292-9065	77	9
19207	12354398	4710-01-510-6120	20	6
19207	12354399	4710-01-511-8944	20	18
19207	12354401		8	13
19207	12354401-1		8	13

CAGEC	PART NUMBER	STOCK NUMBER	FIG.	ITEM
19207	12354401-2		8	13
19207	12354401-3		8	13
19207	12354401-4		8	13
19207	12354412	5342-01-511-0621	52	42
19207	12354413	5342-01-512-8141	52	23
19207	12354414	2990-01-437-3464	51	42
19207	12354415	2815-01-437-4746	51	44
19207	12354416	2930-01-498-3157	51	43
19207	12354417		21	8
19207	12354418		24	10
19207	12354418-2	5340-01-440-1429	25	20
19207	12354419	5306-01-433-4086	24	5
			25	7
19207	12354420	5342-01-513-4776	42	10
19207	12354421	5342-01-513-7484	42	7
19207	12354422	5342-01-512-8135	42	4
19207	12354423	5342-01-512-8637	42	1
19207	12354426	5342-01-511-4526	42	1
19207	12354427	5342-01-513-0837	42	4
			42	10
19207	12354428	5342-01-511-4522	42	4
19207	12354429-1	5342-01-513-5734	42	1
			42	7
19207	12354429-2	5342-01-511-4534	42	7
19207	12354431		53	10
19207	12354432	4910-01-511-5452	53	9
19207	12354434		53	6
19207	12354435	4910-01-511-5453	53	4
19207	12354437		53	21
19207	12354438	2520-01-509-6284	53	19
19207	12354439		53	24
19207	12354440	2520-01-509-6286	53	22
19207	12354442		53	24
19207	12354443	5340-01-433-1141	37	30
19207	12354444	5340-01-433-0518	37	31
19207	12354445	5305-01-502-7258	37	28
19207	12354449	5342-01-512-8535	52	22
19207	12354450	5340-01-512-1782	51	15
19207	12354451	2520-01-509-6287	53	22
19207	12354456	5330-01-433-5274	35	11
19207	12354465	4710-01-511-4540	41	35
19207	12354466		41	37
19207	12354467	6150-01-509-3762	70	8
19207	12354468	6150-01-509-3761	72	32

CAGEC	PART NUMBER	STOCK NUMBER	FIG.	ITEM
19207	12354469	5340-01-511-1476	13	6
19207	12354470	2815-01-513-6112	21	14
19207	12354471	5340-01-513-3844	21	26
19207	12354473	5340-01-510-0252	51	24
19207	12354474		51	26
19207	12354475	4710-01-511-5612	21	20
19207	12354476-1	4720-01-512-8124	21	17
19207	12354477	3040-01-519-7683	12	1
19207	12354477-1	3040-01-519-6392	12	1
19207	12366100	3940-01-440-0283	78	1
19207	12468924	5340-01-513-3896	41	39
19207	12468927	5340-01-513-3876	41	39
19207	12468928	5970-01-511-4359	47	23
			48	5
19207	12468930		12	30
19207	12468943	3020-01-510-4482	19	7
19207	12468944	3020-01-510-5419	19	57
19207	12468945		19	1
19207	12468946	5340-01-482-5403	35	19
97403	13207E6498-2	5935-00-691-5591	70	17
			70	35
			70	63
			71	33
01212	1406	3110-00-155-6675	27	6
50024	1631082	4720-00-278-1110	BULK	2
90005	1742568		45	33
90005	1743117	1650-01-378-7277	45	35
80064	1755683	5935-00-605-9322	67	33
16764	1990272	2920-01-139-3722	59	1
81343	2-2 130139C	4730-00-930-7776	47	15
21335	208K	3110-00-554-5302	30	11
			31	34
10001	2220036	5310-00-115-1440	49	13
			49	45
12603	23E06	5310-00-637-9541	62	26
80045	23MS35338-50	5310-00-820-6653	82	17
73680	26031-7020	5330-00-286-9942	49	48
90005	26413	2910-00-031-9083	45	42
90005	26413-01		45	36
24617	272977	4730-01-030-4950	12	13
08181	28M68		46	23
08181	28M94		46	15
02978	300113	2805-00-774-4610	9	5
02978	302371	2805-00-774-4798	9	14

CAGEC	PART NUMBER	STOCK NUMBER	FIG.	ITEM
02978	302491	5340-00-774-4858	51	16
02978	302718	5355-00-776-7331	1	9
50148	305001	2920-00-770-1641	48	25
01212	307	3110-00-555-5207	32	19
01556	3552-5	5120-00-797-2405	80	3
81343	4-2076035A		45	16
81343	4-4 071502SA	4730-01-293-2920	57	17
81343	4-6140137	4730-00-467-2601	41	38
02978	400507	5365-00-733-8667	10	8
			11	44
			31	6
28839	401752	4730-00-044-4689	17	5
			26	13
			26	28
			28	24
			29	26
			31	4
28839	401809H	5307-00-026-8489	19	39
02978	401876H	5307-00-841-6477	4	10
28839	401895J	5307-00-741-0395	17	6
			28	3
			31	2
03104	401975S	5307-00-638-7608	28	8
28839	402044	5307-00-801-5295	26	25
28839	402044H	5307-00-679-5684	26	25
28839	402044P007	5307-00-801-4819	26	25
02978	402126	5307-00-837-7791	42	21
24617	423884	5310-00-298-9252	38	12
24617	425592	5305-00-042-5592	49	3
			62	17
21450	425593	5306-01-015-5673	38	10
24617	425594	5305-00-042-5594	50	36
24617	425640	5305-00-042-5640	22	1
			41	5
			50	21
			51	21
			52	12
			53	2
21450	425828	5306-00-042-5828	41	21
			45	53
			47	20
			48	39
6W728	4397001-021	5305-00-267-8965	15	39
21450	444011	4730-01-005-2014	36	7

CAGEC	PART NUMBER	STOCK NUMBER	FIG.	ITEM
24617	444699	4730-00-044-4699	2	5
			4	16
			4	16
24617	444715	4730-00-044-4715	12	8
			17	13
81336	454098	4730-00-595-1868	61	19
21450	454108	4730-00-725-3664	47	16
			48	44
08179	466392-5001	2950-01-167-1699	42	11
81640	5X7EG1	2920-00-487-9461	61	7
21450	500241	5330-00-291-2830	11	25
02978	501031	5315-00-058-9929	28	9
			31	7
77445	501226	5325-00-804-3891	29	9
02978	502119	5315-00-753-9735	1	6
19207	503345	5310-00-088-0553	53	12
			56	12
			59	11
21450	503383		56	18
79136	5100-156MDORZD	5325-00-281-2929	30	1
			31	25
02978	515368	5340-00-753-9839	9	6
02978	515462	2805-00-753-9838	9	10
02978	520864	5306-00-206-3850	7	4
02978	523557	5310-00-679-5685	20	2
63728	529312	5330-00-679-7063	26	6
19207	5379997	5120-00-473-7222	81	15
63728	550556	5330-00-599-0942	15	4
			15	11
02978	550559	5305-00-206-3851	15	6
			15	14
02978	554132	2930-00-679-5742	55	9
63946	5654225	2815-01-298-1128	6	15
90005	569807-02	2910-00-203-3322	45	40
19207	5702616	3120-00-678-3230	KITS	
19207	5702617	3120-00-678-3229	KITS	
19207	5702619	3020-00-679-8057	KITS	
19207	5702621	3020-00-678-7099	KITS	
19207	5702622	3040-00-678-3269	KITS	
19207	5702641	2910-00-545-1558	KITS	
19207	5702674	5365-00-235-1941	KITS	
19207	5702738	4330-00-801-1152	KITS	
19207	5704348	3120-00-491-0314	KITS	
19207	5704366	3010-00-762-4587	KITS	

CAGEC	PART NUMBER	STOCK NUMBER	FIG.	ITEM
19207	5704380	3460-00-689-3368	79	2
19207	5704381	3120-00-165-6010	KITS	
19207	5704382	3120-00-165-6011	KITS	
19207	5704383		KITS	
19207	5704471		KITS	
19207	5704475	2815-00-410-1211	KITS	
19207	5704476	2815-00-410-1236	KITS	
19207	5704477	2815-00-410-1248	KITS	
19207	5704478	2815-00-410-1956	KITS	
19207	5704479	2815-00-410-1957	KITS	
19207	5704482	3120-01-018-0192	KITS	
19207	5704483	3120-00-410-1987	KITS	
19207	5704484	3120-00-410-1988	KITS	
19207	5704485	3120-01-013-3629	KITS	
19207	5704486	4330-00-397-3404	KITS	
19207	5704487	4330-00-410-1964	KITS	
19207	5704488	5330-01-026-9498	KITS	
19207	5704805	5180-01-006-9708	KITS	
19207	5705053	4820-01-070-5945	KITS	
19207	5705063	3010-01-091-3200	KITS	
19207	5705284	2815-01-318-5419	KITS	
19207	5705285	2815-01-318-5420	KITS	
19207	5705286	2815-01-318-5421	KITS	
19207	5705287	2815-01-318-7913	KITS	
19207	5705288	2910-01-509-6677	KITS	
19204	572929	5999-00-057-2929	69	2
02978	583294	2815-00-679-8058	10	6
			11	47
63728	583486	5330-00-679-8054	10	1
			11	8
02978	583707	5360-00-679-4966	19	23
63728	585094	5330-00-679-4961	15	31
19207	585811	5310-00-058-5811	51	2
19207	586365	5325-00-682-1619	33	32
63728	586596	5330-00-679-8059	10	23
			11	21
02978	586967	5310-00-679-9880	26	21
77445	587180	4810-00-052-8002	11	33
19207	589919		33	15
			33	21
21450	589920	5315-00-058-9920	5	21
21450	589929	5315-00-058-9929	2	17
			3	1
			4	15

CAGEC	PART NUMBER	STOCK NUMBER	FIG.	ITEM
19207	596281	5306-00-817-6131	6	17
			7	5
19207	596610		55	22
81343	6-2140140C	4730-00-873-0110	21	24
81343	6-2140140CA		12	7
81343	6-6 070221CA	4730-00-618-5372	21	1
81343	6-6140239C-PHOS	4730-00-489-8216	61	20
77820	60-37005-141		67	43
77820	60-42022-7S	5395-01-495-6576	75	12
			76	2
02978	655527	2815-00-679-8053	10	40
02978	699772	2990-01-146-1877	50	4
21450	700078	3110-00-144-8518	19	56
21450	700079	3110-01-315-9564	29	7
21450	700080	3110-00-516-5490	27	8
21450	701023		30	2
			31	26
21450	701024		32	14
21450	701077	3110-01-094-9268	33	31
19207	7017826	4710-00-805-4149	48	34
19207	7017826-15		47	24
19207	7017826-19		48	4
19207	7044067	5307-01-024-7109	3	4
19207	7044068	5307-00-678-3536	3	4
19207	7044069	5307-00-678-3535	3	4
19207	7045881		15	30
19207	7053981		4	8
19207	7057332-3	5340-00-178-6077	62	32
19207	7060198		47	31
19207	7062194-1	4820-01-512-9998	47	14
19207	7062194-2	4820-01-513-0000	48	45
19207	7062196-1	6150-00-410-1975	47	32
			48	24
19207	7065766	5307-00-706-5766	28	4
19207	7065767	5307-00-706-5767	28	4
19207	7082204-A8375091	5120-00-837-5091	81	26
19207	7083696	5110-00-708-3696	80	17
19207	7083697	5110-00-708-3697	80	16
19207	7083698	5110-00-708-3698	80	15
19207	7083699	5110-00-708-3699	80	14
19207	7084278	5330-00-678-7101	59	2
19207	7084444	5307-00-678-6876	29	23
19207	7084445	5307-00-678-6877	29	23
19207	7084527	5307-01-521-0059	3	20

CAGEC	PART NUMBER	STOCK NUMBER	FIG.	ITEM
19207	7084528	5307-01-520-8117	3	20
19207	7084536	5307-01-013-3088	19	40
19207	7084537	5307-01-013-3089	19	40
21450	709460		29	8
70628	712188-11	4720-00-432-1334	50	6
21450	714056		30	4
			31	28
01212	7234-S	5330-01-229-3452	6	12
19207	7320384	5365-00-408-1268	9	20
19207	7320393	3040-01-017-1483	9	22
19207	7320394	3040-01-026-0704	9	21
19207	7320400		33	20
19207	7320403		33	22
19207	7320407	5306-00-678-3316	5	6
19207	7320408	5340-00-454-8599	9	2
19207	7320411	5342-00-678-3532	1	8
			1	31
19207	7320420		5	18
19207	7320427	5360-00-678-3209	9	7
19207	7320428	5360-00-678-3208	9	9
19207	7320429	5360-00-678-3207	9	8
19207	7320440		28	14
19207	7320459	5330-00-678-4676	42	12
19207	7320463	3040-00-411-5749	30	17
19207	7320469	4710-00-350-9399	30	22
19207	7320476		2	30
19207	7320478		30	10
19207	7320480	4710-00-408-4684	30	16
19207	7323987	5306-01-510-8451	36	22
19207	7323988	5306-00-678-4260	36	24
19207	7323992	4730-01-106-4008	38	2
19207	7323993	4730-01-228-1045	38	5
19207	7323994	5310-00-678-5370	38	3
19207	7324661	4730-00-678-3299	38	1
50036	7324900	4730-00-678-3303	14	12
19207	7335556-1		47	3
			48	18
19207	7340053	4730-01-513-2526	42	17
19207	7340058	5310-00-655-9590	36	10
19207	7340059	5306-01-510-4254	7	11
19207	7340060	5306-00-678-3531	16	23
19207	7348529-2	5307-01-013-7889	3	6
			3	6
19207	7348529-3	5307-01-013-7890	3	6

CAGEC	PART NUMBER	STOCK NUMBER	FIG.	ITEM
19207	7348529-3	5307-01-013-7890	3	6
19207	7348529-6	5307-01-014-1254	3	7
19207	7348529-7	5307-01-014-1255	3	7
19207	7348596	5307-00-734-8596	17	6
			28	3
			31	2
19207	7348663	5307-01-014-7885	19	39
19207	7348668	5307-00-734-8668	12	15
			28	8
			31	8
			34	22
19207	7348669	5307-00-734-8669	12	15
			31	8
			34	22
19207	7348776	5307-00-734-8776	34	4
19207	7348777	5307-00-734-8777	34	4
19207	7348782	5307-00-734-8782	3	13
			4	11
19207	7348783	5307-00-734-8783	3	13
			4	11
19207	7348797	5307-00-734-8797	3	16
19207	7348798	5307-00-734-8798	3	16
19207	7348803	5307-00-734-8803	4	3
			28	6
19207	7348804	5307-00-734-8804	4	3
			28	6
19207	7348812	5307-00-734-8812	12	11
19207	7348813	5307-00-734-8813	12	11
19207	7350206		20	5
19207	7351617	5340-00-735-1617	64	11
19207	7351807	5340-00-281-4425	64	12
19207	7359808	5330-00-291-1720	1	19
19207	7383560	6150-00-651-4079	67	7
			67	34
			67	49
			71	22
19207	7384968	5340-00-738-4968	84	5
19207	7385174	5340-00-738-5174	23	5
			41	8
19207	7388351	5365-00-690-7933	67	52
			71	16
19207	7388353	5935-00-754-9080	71	2
			72	20
19207	7388355	5935-00-729-8217	71	8

CAGEC	PART NUMBER	STOCK NUMBER	FIG.	ITEM
19207	7388355	5935-00-729-8217	72	17
19207	7388356	5365-00-682-2043	71	7
			72	19
19207	7392818	5307-01-513-4204	17	4
76680	7399-5	5330-00-486-0372	49	26
19207	7403067	5307-01-149-5845	26	26
19207	7403138-6	5307-00-084-0629	5	16
19207	7403138-7	5307-00-084-0628	5	16
19207	7403503		17	6
19207	7403580	5365-00-740-3580	22	7
19207	7403580-1	5330-01-053-2920	14	11
19207	7410162	5307-01-513-4344	29	25
19207	7410163	5307-00-741-0163	29	25
19207	7414584	5306-00-741-4584	47	18
			51	7
			52	4
			53	15
19207	7415112		1	7
19207	7415118	5306-01-510-4289	5	5
19207	7415354	5330-00-741-5354	39	19
19207	7415384	5307-00-741-5384	12	18
			27	27
19207	7415385	5307-01-113-4110	12	18
			27	27
19207	7416306	5310-01-512-9322	77	2
19207	7416363	6620-00-993-5546	61	18
19207	7416591		4	12
19207	7416621		45	39
19207	7416751	5330-00-292-7363	2	11
19207	7527645	5975-00-697-7769	67	32
			69	13
01556	7551-8	5120-00-861-1170	80	7
01556	7552-6	5120-00-710-7437	80	4
01556	7552-7	5120-00-797-2407	80	5
01556	7552-8	5120-00-672-8897	80	6
19207	7716521	5999-00-485-8955	67	19
			67	26
			68	13
			71	6
			72	21
			74	6
19207	7716527	5999-00-771-6527	67	50
			71	19
19207	7716683	5935-00-257-1024	67	18

CAGEC	PART NUMBER	STOCK NUMBER	FIG.	ITEM
19207	7716683	5935-00-257-1024	68	12
			69	23
19207	7716793	5935-00-771-6793	67	16
			68	10
19207	7722322	5365-00-772-2322	67	28
19207	7722333	5365-00-090-5426	67	20
			68	15
			69	24
19207	7722343	5365-00-772-2343	67	4
			69	22
19207	7722353	5935-00-772-2353	67	23
			68	19
19207	7723306	5935-00-333-3088	67	3
			69	20
19204	7723307	5935-00-772-3307	67	30
			69	11
19207	7723308	5935-00-333-9414	67	29
			71	15
19207	7723309	5310-00-393-6685	67	21
			68	16
			69	25
19207	7723474	5935-01-005-6455	67	25
19207	7723892	5331-00-772-3892	1	32
16528	7728778	5940-00-314-0479	72	28
19207	7728779	5940-01-059-5266	69	14
19207	7728780	5940-01-035-4212	69	10
19207	7744555	5307-00-774-4555	5	14
19207	7744564	5307-01-513-1290	10	35
			11	10
			12	2
			28	21
19207	7744570	5310-00-774-4570	15	21
19207	7744572	5307-00-774-4572	12	10
19207	7744573	5307-00-774-4573	12	10
19207	7744605	5307-00-774-4605	31	20
19207	7744617	5340-00-679-1591	9	13
19207	7744699	5315-00-774-4699	19	16
			19	46
19207	7744720	5306-00-774-4720	54	12
19207	7744766	5310-00-774-4766	34	14
19207	7744795	5307-00-774-4795	31	20
19207	7744803	5307-00-774-4803	5	14
19207	7744813	5307-00-264-2472	10	35
			11	10

CAGEC	PART NUMBER	STOCK NUMBER	FIG.	ITEM
19207	7744813	5307-00-264-2472	12	2
			28	21
19207	7751056	5120-00-251-1527	80	22
19207	7767317	5310-00-776-7317	9	16
			9	24
19207	7767318	5310-00-776-7318	24	9
			25	1
			42	3
			56	6
			56	13
			59	7
			62	27
			63	32
			66	7
02978	7767321	2805-00-776-7321	9	19
			9	25
19207	7767337	4730-01-132-1422	2	2
19207	7767340	5307-00-727-4938	4	10
19207	7767350	5310-01-511-1664	30	6
			31	36
19207	7767363	5315-00-776-7363	6	2
			7	9
19207	7767518	4730-00-522-1909	47	17
19207	7767728	5310-00-776-7728	55	6
19207	7767804	5307-00-776-7804	5	11
			12	6
			26	12
			26	26
19207	7767805	5307-00-776-7805	5	11
			12	6
			26	12
			26	26
19207	7950177	5120-00-494-1846	81	16
19207	7971509	5935-01-109-2257	67	48
			71	21
19207	7971982	5307-00-207-8620	28	12
19207	7971983	5307-00-207-8619	28	12
19207	7992645	5307-00-678-3530	4	2
19207	7992646	5307-00-678-3529	4	2
19207	7992649	5307-00-678-6880	29	22
19207	7992650	5307-00-678-6881	29	22
19207	7992653	5307-00-678-3528	3	8
			3	8
19207	7992654	5307-00-678-3527	3	8

CAGEC	PART NUMBER	STOCK NUMBER	FIG.	ITEM
19207	7992654	5307-00-678-3527	3	8
19207	7992657	5307-00-678-3526	3	21
19207	7992658	5307-00-678-3525	3	21
19207	7992665	5307-00-678-6882	12	31
			28	19
19207	7992666	5307-00-678-6883	12	31
			28	19
19207	7992669	5307-00-678-3524	4	4
19207	7992670	5307-00-678-3523	4	4
19207	7992673	5307-00-678-3320	31	10
19207	7992674	5307-00-678-3321	31	10
19207	7992677	5307-00-678-3522	4	7
19207	7992678	5307-00-678-3521	4	7
19207	7992681	5307-00-678-3520	4	6
19207	7992682	5307-00-678-3519	4	6
19207	7992685	5307-00-678-3518	4	5
19207	7992686	5307-00-678-3517	4	5
19207	7992689	5307-00-678-6884	28	13
19207	7992690	5307-00-678-6885	28	13
19207	7992693	5307-00-678-3516	4	1
19207	7992694	5307-00-678-3515	4	1
19207	7992697	5307-00-678-3514	4	14
19207	7992698	5307-00-678-3513	4	14
81343	8-8140239C	4730-00-289-2357	12	16
15434	8169006	4730-00-278-3912	61	15
19207	8338503	5340-01-077-1501	63	23
19207	8338561	5935-00-833-8561	67	13
			68	5
			69	6
			71	30
			73	10
19207	8338562	5970-00-833-8562	67	14
			68	6
			69	7
			69	19
			70	24
			70	50
			71	29
			73	11
19207	8338564	5940-00-399-6676	67	10
			68	7
			69	8
			70	23
			70	51

CAGEC	PART NUMBER	STOCK NUMBER	FIG.	ITEM
19207	8338564	5940-00-399-6676	71	31
			73	12
19207	8338566	5935-00-572-9180	69	4
19207	8338567	5310-00-833-8567	69	3
19207	8344324	5970-00-615-8884	67	35
19207	8344522	5935-01-013-7520	67	9
19207	8344527	5935-00-462-2913	67	36
19207	8352634	5325-00-678-3311	5	9
			5	19
19207	8352635	5325-00-678-3310	5	13
19207	8352636	5325-00-678-3309	3	3
19207	8357819-1	6620-01-050-2086	22	13
19207	8357967-4		15	18
19207	8365383-6	5307-01-019-8946	19	37
19207	8365383-7	5307-01-019-8947	19	37
19207	8365686	5307-01-144-8861	26	27
19207	8365771	4730-00-035-8036	41	17
			48	28
19207	8365809	5307-00-272-6331	2	16
			26	15
			26	27
			28	2
			31	3
19207	8365810	5307-00-272-6332	2	16
			26	15
			26	27
			28	2
			31	3
19207	8376442	4820-00-242-4064	82	10
19207	8380737	5342-00-439-1759	82	21
19207	8393931	3110-00-227-3620	49	5
			49	59
19207	8395481-1	5935-01-016-8330	74	2
19207	8395482	5975-00-752-2746	74	10
19207	8666532	5307-01-031-0408	34	3
19207	8666533	5307-01-031-0407	34	3
19207	8666736	5307-00-866-6736	12	9
			12	20
			17	4
19207	8666737	5307-00-866-6737	12	9
			12	20
			17	4
19207	8666738 NON-ASBE STOS	5330-01-417-1912	56	3

CAGEC	PART NUMBER	STOCK NUMBER	FIG.	ITEM
19207	8679576	5310-00-333-7348	1	22
			10	11
			11	5
			14	13
			14	13
			16	21
			18	13
			19	44
			27	18
			28	15
			29	2
			31	14
			34	24
			55	10
19207	8682451	5340-00-453-5387	42	24
19207	8682455	5365-00-678-3271	30	8
			31	29
19207	8682469	4710-01-248-9634	2	4
			28	7
			31	9
19207	8682492	2805-00-679-8091	54	9
19207	8682500	5307-00-678-3510	3	22
19207	8682501	5307-00-678-3509	3	22
19207	8682503	5330-00-678-4695	47	36
			48	23
19207	8682505	5330-00-678-3270	24	6
			25	5
19207	8682512	3120-00-493-9192	2	6
19207	8682513		2	7
			28	18
19207	8682519		42	22
19207	8682539		29	13
19207	8682540	2815-00-455-9496	10	7
			11	42
19207	8682541		10	10
			11	45
19207	8682553		31	31
19207	8682558	2530-00-402-4430	42	23
19207	8682561	5340-01-026-9982	51	6
19207	8682620	2805-00-679-8092	54	11
19207	8682623	2930-00-436-3207	51	40
19207	8682626	2805-00-522-2576	51	36
19207	8682658	2930-00-350-9401	55	3
19207	8682665		33	25

CAGEC	PART NUMBER	STOCK NUMBER	FIG.	ITEM
19207	8682674	5365-00-407-7011	30	3
			31	27
19207	8682676	3040-00-193-8213	49	15
19207	8682677	3040-00-932-5001	49	29
19207	8682679	5330-00-678-4669	22	14
19207	8682680	5330-00-678-5388	13	5
19207	8682682	5340-00-442-5895	55	18
19207	8682683	3040-00-851-4909	11	24
19207	8682684		30	9
			31	30
19207	8682689	3020-00-678-4239	27	32
19207	8682691	3020-00-678-4238	27	14
19207	8682694		42	29
			42	35
19207	8682700	2815-00-679-8093	54	8
19207	8682701	2815-00-679-8090	54	7
19207	8682702	5340-00-089-8830	54	19
19207	8682708		49	30
19207	8682709		49	17
19207	8682726		55	14
19207	8682730		33	17
19207	8682731	4820-00-678-4729	33	23
19207	8682732		33	27
19207	8682736	5365-00-232-6019	1	3
			1	30
19207	8682737	2815-00-489-2575	1	2
19207	8682737-1		1	27
19207	8682745	3120-00-679-8098	11	23
19207	8682748	4730-00-406-4611	42	19
19207	8682749	4730-00-406-4610	42	13
19207	8682750	2990-00-402-4432	42	30
19207	8682751	4320-00-177-7918	11	22
19207	8682752	2990-00-453-5386	42	39
19207	8682753	4710-00-071-8124	20	13
19207	8682754	5330-00-411-2513	1	1
19207	8682756	2805-00-760-5837	51	28
19207	8682757	2805-00-760-5838	51	13
19207	8682765	5340-00-248-4631	32	17
19207	8682769	5330-00-679-7064	26	16
19207	8682770 NON-ASBE STOS	5330-00-678-5386	21	12
19207	8682783	5342-00-484-0771	49	79
19207	8682785	2930-00-997-1537	55	11
19207	8682786-1	3040-01-018-3702	49	82

CAGEC	PART NUMBER	STOCK NUMBER	FIG.	ITEM
19207	8682787	5307-00-682-5820	42	28
			42	36
19207	8682797	5330-00-678-4681	42	15
19207	8682799	4730-00-406-7307	26	7
79788	8682800	5330-01-347-8164	26	1
19207	8682814	3040-00-678-4236	27	28
19207	8682815	5360-00-678-3276	13	8
19207	8682816	4730-00-223-7014	10	16
			11	40
19207	8682817	5340-00-136-1201	10	38
			11	35
19207	8698689	5365-00-209-0174	26	31
19207	8698690	5310-00-637-3057	26	32
19207	8698764	5365-00-205-9307	26	22
19207	8701308	5935-01-088-4466	67	38
19207	8701309	2590-01-047-0804	67	47
			71	20
19207	8701317		67	39
19207	8701324	5999-00-532-0264	67	40
19207	8701325	5310-00-655-9860	67	51
			71	17
19207	8701329	5935-00-489-6784	67	24
			76	3
19207	8701338	5935-01-033-7945	67	17
			68	11
19207	8701345	5935-01-106-5189	71	4
			72	23
19207	8701346	5935-00-057-0746	71	3
			72	24
19207	8708361	5120-00-575-7767	80	13
19207	8708419	4910-00-554-1317	79	9
19207	8708712	5120-00-310-4668	81	6
19207	8717157		15	3
			15	10
19207	8717298	5315-00-141-6337	6	4
19207	8717299	5315-00-141-6338	6	4
19207	8720680	5935-00-614-9136	67	8
19207	8724199	5935-00-686-2610	67	6
			69	21
19207	8724223	5935-01-084-6024	67	37
19207	8724233	5935-00-686-9962	69	12
19204	8724240	5935-00-686-9963	67	46
			71	18
19207	8724494	5975-00-660-5962	70	25

CAGEC	PART NUMBER	STOCK NUMBER	FIG.	ITEM
19207	8724494	5975-00-660-5962	70	49
19207	8724497	5310-00-656-0067	70	18
			70	34
			70	64
			71	32
19207	8724762	9390-00-146-9334	67	12
			68	9
19207	8724763	9390-00-180-7289	67	27
			68	14
			72	18
			74	9
19207	8724767	9390-00-458-0130	74	8
19207	8724986		6	21
19207	8724986-1		6	21
19207	8724987		6	14
19207	8724987-1		6	14
19207	8724995		6	22
19207	8724995-1		6	22
19207	8724996		6	13
19207	8724996-1		6	13
02978	8725003	2815-00-678-3203	5	10
R1120	8725004	2815-00-678-3202	5	17
19207	8725096		19	58
19207	8725099		19	22
02978	8725113	5360-00-679-4964	19	24
19207	8725115		19	25
19207	8725140	5307-00-678-3228	3	11
19207	8725141		2	32
19207	8725144		2	12
19207	8725145		2	19
19207	8725146		2	13
19207	8725170		2	27
02978	8725176	2815-00-678-3201	5	10
19207	8725177	2815-00-678-3200	5	10
02978	8725179	2815-00-678-3199	5	17
19207	8725180	2815-00-678-3198	5	17
19207	8725181		2	22
19207	8725184	5340-00-238-9191	6	10
19207	8725208	3120-00-678-3197	9	18
19207	8725209	3120-00-678-3196	9	27
19207	8725211	5340-00-151-5991	13	15
19207	8725218	5365-00-402-8380	13	9
02978	8725222	2815-00-678-3218	13	4
19207	8725224	4310-00-406-4619	13	13

CAGEC	PART NUMBER	STOCK NUMBER	FIG.	ITEM
19207	8725225		10	39
			11	34
19207	8725226	3040-00-937-4846	31	32
19207	8725227	3130-00-498-9359	30	12
			31	33
19207	8725229		10	31
			11	13
19207	8725236	5340-00-490-0872	2	10
19207	8725238		3	12
19207	8725240	5360-00-678-3222	13	12
19207	8725243	3130-00-179-6656	33	36
19207	8725248	3040-00-678-4246	33	7
19207	8725253	5340-00-125-3891	10	2
			11	7
19207	8725254	2815-00-678-3227	2	28
19207	8725256	5315-00-238-9239	2	29
19207	8725260	3020-01-290-1298	7	3
19207	8725273	5330-01-324-7207	6	11
19207	8725275	5340-00-498-2398	27	17
19207	8725276	2815-00-678-3223	13	11
19207	8725277	5330-00-678-3171	34	20
19207	8725281	2815-00-678-3195	9	17
19207	8725289		9	15
19207	8725293	2815-00-678-3194	9	26
19207	8725295		9	23
19207	8725296 NON-ASBE STOS	5330-01-374-9264	9	1
19207	8725298	5307-00-678-3314	5	12
19207	8743025	4910-00-795-7961	81	25
19207	8745446	5307-01-147-3350	19	36
19207	8745447	5307-00-573-5569	19	36
19207	8745480	5310-00-535-6688	39	24
19207	8761016	3040-00-402-4429	49	66
19207	8761018	3040-00-402-4431	49	73
19207	8761020	3040-00-678-3265	30	13
19207	8761021	4710-00-679-5668	26	2
19207	8761022	3130-00-937-1467	27	11
19207	8761033		26	29
19207	8761041	5365-00-678-4730	33	8
19207	8761045	2815-01-146-9005	26	24
19207	8761046		26	14
19207	8761050	3040-00-678-3266	55	8
19207	8761051		31	22
19207	8761052	4710-00-477-9899	20	19

CAGEC	PART NUMBER	STOCK NUMBER	FIG.	ITEM
19207	8761059	4710-00-477-9900	20	12
19207	8761062	5340-00-678-3267	32	21
19207	8761063		32	23
19207	8761080	5342-00-318-7545	1	4
			1	28
19207	8761081		27	34
19207	8761082	4710-00-406-4614	42	20
19207	8761084		55	21
19207	8761085	3040-00-402-4422	36	3
19207	8761086	2990-00-402-4433	42	27
			42	34
19207	8761091	4730-00-679-5682	20	1
19207	8761109	2590-00-897-2849	15	2
			15	9
19207	8761131	4710-00-150-6187	84	4
19207	8761137	4730-00-406-4609	26	18
19207	8761138	4730-00-406-7308	26	17
19207	8761155-1	3040-01-010-3186	31	18
19207	8761156	4730-00-177-8243	26	11
19207	8761157	4710-00-679-5667	26	20
19207	8761158	4710-00-679-5666	26	8
19207	8761159	4710-00-679-5665	26	9
19207	8761160	4710-00-679-5664	26	19
19207	8761164	5340-00-402-4435	54	10
19207	8761188		29	27
02978	8761190	4710-00-869-3595	20	16
19207	8761192	4710-00-073-5129	20	17
19207	8761193	2815-00-485-9555	20	14
19207	8761199	5307-00-678-6887	29	21
19207	8761200	5307-00-678-6888	29	21
19207	8761203	5307-00-678-3329	31	23
19207	8761204	5307-00-678-3328	31	23
19207	8761206	2815-00-177-9162	29	20
19207	8761230	5310-00-678-3257	55	7
19207	8761244	5310-00-406-7319	33	1
19207	8761260	5360-00-678-3256	32	15
19207	8761268	5365-00-407-7003	54	16
19207	8761269	6115-00-442-5894	51	37
19207	8761270	2930-00-402-4421	51	19
19207	8761272	5306-00-678-6889	59	4
19207	8761273	5310-00-655-9859	27	15
19207	8761279	5310-00-720-7627	2	25
19207	8761287	3040-00-678-3255	30	23
19207	8761295	2815-00-230-3593	1	34

CAGEC	PART NUMBER	STOCK NUMBER	FIG.	ITEM
19207	8761297	5120-00-678-5282	80	8
19207	8761328		6	21
19207	8761329		6	14
19207	8761330		6	22
19207	8761331		6	13
19207	8761337	5306-00-678-3325	55	15
19207	8761390	3110-00-481-2825	30	5
			31	37
19207	8761412	5315-00-282-0341	36	8
19207	8761413	5325-00-678-4257	33	10
19207	8761420	5310-00-402-8379	29	6
19207	8761431-1		39	32
19207	8761432	5306-00-678-1885	54	18
19207	8761440	3040-00-678-4233	27	29
19207	8761442	5307-00-678-6891	29	24
19207	8761443	5307-00-678-6890	29	24
19207	8761449	4730-00-457-1984	21	3
19207	8761453	5306-01-512-6695	42	40
19207	8761490-2	4720-01-465-6575	42	18
19207	8761491-3	4720-00-410-1184	21	37
19207	8761502-2	4720-00-410-1231	21	40
19207	8761510	4720-00-678-3285	39	7
19207	8761535	5120-00-678-5285	79	12
19207	8761546	4730-01-179-1214	39	2
19207	8761547 NON-ASBE STOS	5330-01-386-8530	24	1
			25	10
19207	8761555	4730-00-933-3138	84	1
19207	8761562	5120-00-475-5414	81	11
19207	8761568	5120-00-678-5288	81	9
19207	8764639	5310-00-655-9975	51	12
19207	8764982	5330-00-678-4734	29	10
19207	9686981	3120-00-529-8347	49	81

By Order of the Secretary of the Army:

PETER J. SCHOOMAKER
General, United States Army
Chief of Staff

Official:

SANDRA R. RILEY
Administrative Assistant to the
Secretary of the Army

0530803

DISTRIBUTION: To be distributed in accordance with the Initial Distribution Number (IDN) 371459, requirements for TM 9-2815-220-24P.

RECOMMENDED CHANGES TO PUBLICATIONS AND BLANK FORMS For use of this form, see AR 25-30; the proponent agency is OAASA	Use Part II *(reverse)* for Repair Parts and Special Tool Lists (RPSTL) and Supply Catalogs/Supply Manuals (SC/SM).	DATE
TO: *(Forward to proponent of publication or form) (Include ZIP Code)*	**FROM:** *(Activity and location) (Include ZIP Code)*	

PART I - ALL PUBLICATIONS (EXCEPT RPSTL AND SC/SM) AND BLANK FORMS

PUBLICATION/FORM NUMBER	DATE	TITLE

ITEM	PAGE	PARA-GRAPH	LINE	FIGURE NO.	TABLE	RECOMMENDED CHANGES AND REASON

* *Reference to line numbers within the paragraph or subparagraph.*

TYPED NAME, GRADE OR TITLE	TELEPHONE EXCHANGE/AUTOVON, PLUS EXTENSION	SIGNATURE

TO: *(Forward direct to addressee listed in publication)*	FROM: *(Activity and location) (Include ZIP Code)*	DATE

PART II - REPAIR PARTS AND SPECIAL TOOL LISTS AND SUPPLY CATALOGS/SUPPLY MANUALS

PUBLICATION NUMBER	DATE	TITLE

PAGE NO.	COLM NO.	LINE NO.	NATIONAL STOCK NUMBER	REFERENCE NO.	FIGURE NO.	ITEM NO.	TOTAL NO. OF MAJOR ITEMS SUPPORTED	RECOMMENDED ACTION

PART III - REMARKS *(Any general remarks or recommendations, or suggestions for improvement of publications and blank forms. Additional blank sheets may be used if more space is needed.)*

TYPED NAME, GRADE OR TITLE	TELEPHONE EXCHANGE/AUTOVON, PLUS EXTENSION	SIGNATURE

USAPA V3.01

RECOMMENDED CHANGES TO PUBLICATIONS AND BLANK FORMS For use of this form, see AR 25-30; the proponent agency is OAASA	Use Part II *(reverse)* for Repair Parts and Special Tool Lists (RPSTL) and Supply Catalogs/Supply Manuals (SC/SM).	DATE
TO: *(Forward to proponent of publication or form) (Include ZIP Code)*	**FROM:** *(Activity and location) (Include ZIP Code)*	

PART I - ALL PUBLICATIONS (EXCEPT RPSTL AND SC/SM) AND BLANK FORMS

PUBLICATION/FORM NUMBER	DATE	TITLE

ITEM	PAGE	PARA-GRAPH	LINE	FIGURE NO.	TABLE	RECOMMENDED CHANGES AND REASON

* *Reference to line numbers within the paragraph or subparagraph.*

TYPED NAME, GRADE OR TITLE	TELEPHONE EXCHANGE/AUTOVON, PLUS EXTENSION	SIGNATURE

TO: *(Forward direct to addressee listed in publication)*	FROM: *(Activity and location) (Include ZIP Code)*	DATE

PART II - REPAIR PARTS AND SPECIAL TOOL LISTS AND SUPPLY CATALOGS/SUPPLY MANUALS

PUBLICATION NUMBER	DATE	TITLE

PAGE NO.	COLM NO.	LINE NO.	NATIONAL STOCK NUMBER	REFERENCE NO.	FIGURE NO.	ITEM NO.	TOTAL NO. OF MAJOR ITEMS SUPPORTED	RECOMMENDED ACTION

PART III - REMARKS *(Any general remarks or recommendations, or suggestions for improvement of publications and blank forms. Additional blank sheets may be used if more space is needed.)*

TYPED NAME, GRADE OR TITLE	TELEPHONE EXCHANGE/AUTOVON, PLUS EXTENSION	SIGNATURE

USAPA V3.01

RECOMMENDED CHANGES TO PUBLICATIONS AND BLANK FORMS For use of this form, see AR 25-30; the proponent agency is OAASA	Use Part II *(reverse)* for Repair Parts and Special Tool Lists (RPSTL) and Supply Catalogs/Supply Manuals (SC/SM).	DATE
TO: *(Forward to proponent of publication or form) (Include ZIP Code)*	**FROM:** *(Activity and location) (Include ZIP Code)*	

PART I - ALL PUBLICATIONS (EXCEPT RPSTL AND SC/SM) AND BLANK FORMS

PUBLICATION/FORM NUMBER	DATE	TITLE

ITEM	PAGE	PARA-GRAPH	LINE	FIGURE NO.	TABLE	RECOMMENDED CHANGES AND REASON

* *Reference to line numbers within the paragraph or subparagraph.*

TYPED NAME, GRADE OR TITLE	TELEPHONE EXCHANGE/AUTOVON, PLUS EXTENSION	SIGNATURE

TO: *(Forward direct to addressee listed in publication)*	FROM: *(Activity and location) (Include ZIP Code)*	DATE

PART II - REPAIR PARTS AND SPECIAL TOOL LISTS AND SUPPLY CATALOGS/SUPPLY MANUALS

PUBLICATION NUMBER	DATE	TITLE

PAGE NO.	COLM NO.	LINE NO.	NATIONAL STOCK NUMBER	REFERENCE NO.	FIGURE NO.	ITEM NO.	TOTAL NO. OF MAJOR ITEMS SUPPORTED	RECOMMENDED ACTION

PART III - REMARKS *(Any general remarks or recommendations, or suggestions for improvement of publications and blank forms. Additional blank sheets may be used if more space is needed.)*

TYPED NAME, GRADE OR TITLE	TELEPHONE EXCHANGE/AUTOVON, PLUS EXTENSION	SIGNATURE

USAPA V3.01

RECOMMENDED CHANGES TO PUBLICATIONS AND BLANK FORMS For use of this form, see AR 25-30; the proponent agency is DAAG-ASA	Use Part II (reverse) for Repair Parts and Special Tool Lists (RPSTL) and Supply Catalogs/Supply Manuals (SC/SM).	DATE
TO: *(Forward to proponent of publication or form) (Include ZIP Code)*	FROM: *(Activity and location) (Include ZIP Code)*	

PART I - ALL PUBLICATIONS (EXCEPT RPSTL AND SC/SM) AND BLANK FORMS

PUBLICATION/FORM NUMBER	DATE	TITLE

ITEM	PAGE	PARA-GRAPH	LINE	FIGURE NO.	TABLE	RECOMMENDED CHANGES AND REASON

** Reference to line numbers within the paragraph or subparagraph.*

TYPED NAME, GRADE OR TITLE	TELEPHONE EXCHANGE/AUTOVON, PLUS EXTENSION	SIGNATURE

DA FORM 2028, FEB 74 REPLACES DA FORM 2028, 1 DEC 68, WHICH WILL BE USED. USAPA V3.01

TO: *(Forward direct to addressee listed in publication)*	FROM: *(Activity and location) (Include ZIP Code)*	DATE

PART II - REPAIR PARTS AND SPECIAL TOOL LISTS AND SUPPLY CATALOGS/SUPPLY MANUALS

PUBLICATION NUMBER	DATE	TITLE

PAGE NO.	COLM NO.	LINE NO.	NATIONAL STOCK NUMBER	REFERENCE NO.	FIGURE NO.	ITEM NO.	TOTAL NO. OF MAJOR ITEMS SUPPORTED	RECOMMENDED ACTION

PART III - REMARKS *(Any general remarks or recommendations, or suggestions for improvement of publications and blank forms. Additional blank sheets may be used if more space is needed.)*

TYPED NAME, GRADE OR TITLE	TELEPHONE EXCHANGE/AUTOVON, PLUS EXTENSION	SIGNATURE

USAPA V3.01

THE METRIC SYSTEM AND EQUIVALENTS

LINEAR MEASURE

1 Centimeter = 10 Millimeters = 0.01 Meters = 0.3937 Inches
1 Meter = 100 Centimeters = 1000 Millimeters = 39.37 Inches
1 Kilometer = 1000 Meters = 0.621 Miles

WEIGHTS

1 Gram = 0.001 Kilograms = 1000 Milligrams = 0.035 Ounces
1 Kilogram = 1000 Grams = 2.2 Lb.
1 Metric Ton = 1000 Kilograms = 1 Megagram = 1.1 Short Tons

LIQUID MEASURE

1 Milliliter = 0.001 Liters = 0.0338 Fluid Ounces
1 Liter = 1000 Milliliters = 33.82 Fluid Ounces

SQUARE MEASURE

1 Sq. Centimeter = 100 Sq. Millimeters = 0.155 Sq. Inches
1 Sq. Meter = 10,000 Sq. Centimeters = 10.76 Sq. Feet
1 Sq. Kilometer = 1,000,000 Sq. Meters = 0.386 Sq. Miles

CUBIC MEASURE

1 Cu. Centimeter = 1000 Cu. Millimeters = 0.06 Cu. Inches
1 Cu. Meter = 1,000,000 Cu. Centimeters = 35.31 Cu. Feet

TEMPERATURE

$\frac{5}{9}(°F - 32) = °C$
212° Fahrenheit is equivalent to 100° Celsius
90° Fahrenheit is equivalent to 32.2° Celsius
32° Fahrenheit is equivalent to 0° Celsius
$\frac{9}{5}\,°C + 32 = °F$

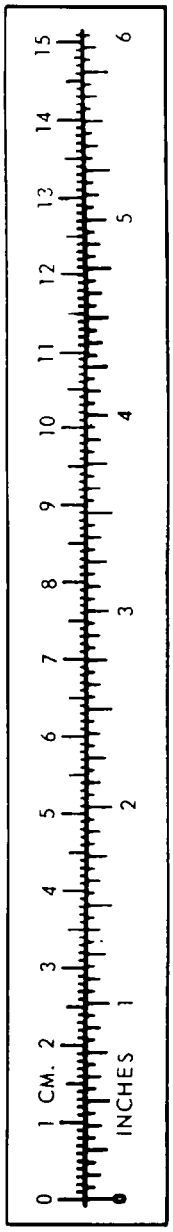

APPROXIMATE CONVERSION FACTORS

TO CHANGE	TO	MULTIPLY BY
Inches	Centimeters	2.540
Feet	Meters	0.305
Yards	Meters	0.914
Miles	Kilometers	1.609
Square Inches	Square Centimeters	6.451
Square Feet	Square Meters	0.093
Square Yards	Square Meters	0.836
Square Miles	Square Kilometers	2.590
Acres	Square Hectometers	0.405
Cubic Feet	Cubic Meters	0.028
Cubic Yards	Cubic Meters	0.765
Fluid Ounces	Milliliters	29.573
Pints	Liters	0.473
Quarts	Liters	0.946
Gallons	Liters	3.785
Ounces	Grams	28.349
Pounds	Kilograms	0.454
Short Tons	Metric Tons	0.907
Pound-Feet	Newton-Meters	1.356
Pounds per Square Inch	Kilopascals	6.895
Miles per Gallon	Kilometers per Liter	0.425
Miles per Hour	Kilometers per Hour	1.609

TO CHANGE	TO	MULTIPLY BY
Centimeters	Inches	0.394
Meters	Feet	3.280
Meters	Yards	1.094
Kilometers	Miles	0.621
Square Centimeters	Square Inches	0.155
Square Meters	Square Feet	10.764
Square Meters	Square Yards	1.196
Square Kilometers	Square Miles	0.386
Square Hectometers	Acres	2.471
Cubic Meters	Cubic Feet	35.315
Cubic Meters	Cubic Yards	1.308
Milliliters	Fluid Ounces	0.034
Liters	Pints	2.113
Liters	Quarts	1.057
Liters	Gallons	0.264
Grams	Ounces	0.035
Kilograms	Pounds	2.205
Metric Tons	Short Tons	1.102
Newton-Meters	Pound-Feet	0.738
Kilopascals	Pounds per Square Inch	0.145
Kilometers per Liter	Miles per Gallon	2.354
Kilometers per Hour	Miles per Hour	0.621